Cromwell Mk.IV

Cruiser Tank Mk. VIII

Assembly guide

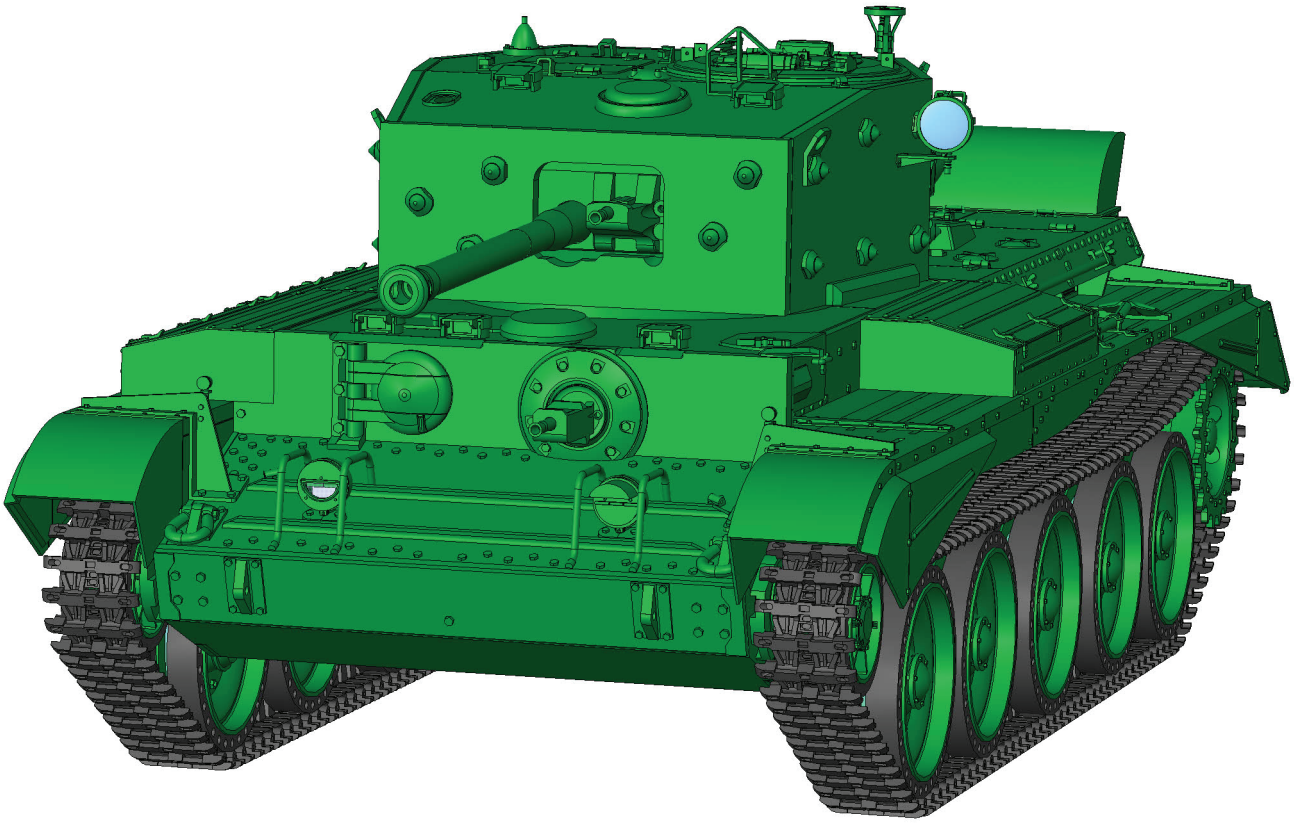

1/6 scale RC model by WARPRINTS

Cromwell Mk.IV

Assembly guide

CONTENTS:

PAGE	CHAPTER:
4	Introduction
8	**ASSEMBLY 01 - LOWER HULL**
39	Idler wheels
56	Road wheels
93	Drive sprockets and motors
105	**ASSEMBLY 02 - UPPER HULL**
198	Turret rotation - MG995 360° servo or compatible
203	Turret rotation - TT motor or compatible geared motor
208	**ASSEMBLY 03 – ENGINE COVER**
222	**ASSEMBLY 04 – LOWER TURRET**
244	**ASSEMBLY 05 – TOP OF THE TURRET**
263	**ASSEMBLY 06 - CANNON**
264	Cannon A - Version with levers
285	Cannon B - Version with gears
301	Final assembly

Cromwell Mk.IV
Assembly guide

Thank you for choosing our model.

We hope that the assembly will be trouble-free and you will enjoy the model.
The model is designed to be as easy to service and modify as possible.
At the same time, we tried to offer a wide range of options and compatibility in assembly.

This part of the manual will guide you through the assembly of the model, it also contains a list of materials needed for its assembly.
A list of all printed parts can be found in the second part of the manual entitled Cromwell Mk.IV PRINTING GUIDE.

DO NOT BE CONCERNED BY THE LARGE NUMBER OF PAGES OF THIS MANUAL. IT'S FULL OF LARGE PICTURES AND SAVES NO SPACE.
It is prepared so that the position of all parts is clearly visible and the procedure is sufficiently described. Each page contains one construction step.
If you still encounter problems or ambiguities during construction, contact us on our forum **https://www.warprints.xyz/forum**

In the manual you will find everything you need to build the model, including the location of mechanical parts such as servomotors, motors or various bearings.
The manual is divided into six separate sets for clarity.
All printed parts are numbered according to the order in which they are installed on the model.
Some printed parts are identical or mirrored, but have different numbering to maintain the clarity of the assembly.
Follow the assembly procedure according to the instructions, do not skip or neglect any steps.

Failure to follow the instructions may prevent further construction, or even lead to damage on the model during use!!!

FEATURES:

- possibility to use two different types of motor for turret rotation

- possibility of connecting a smoke generator to the exhaust

- possibility of connecting a smoke generator to fully functional smoke dischargers

- 5 functional headlights

- built-in track tensioners

- cannon equipped with servos for recoil and aiming

- the possibility of using two different types of mechanism to move the cannon.

- all hatches on the model are openable. A total of 26 different hatches and covers.

- the rims of the drive wheels can be printed from flexible material.
At the same time, you have a simple one-piece wheel at your disposal, in case you do not want or cannot print from flexible materials.

- possibility of inserting LED lights into both machine guns

- preparation for FPV camera in the driver's hatch.

- many alternative parts and special parts for resin printers

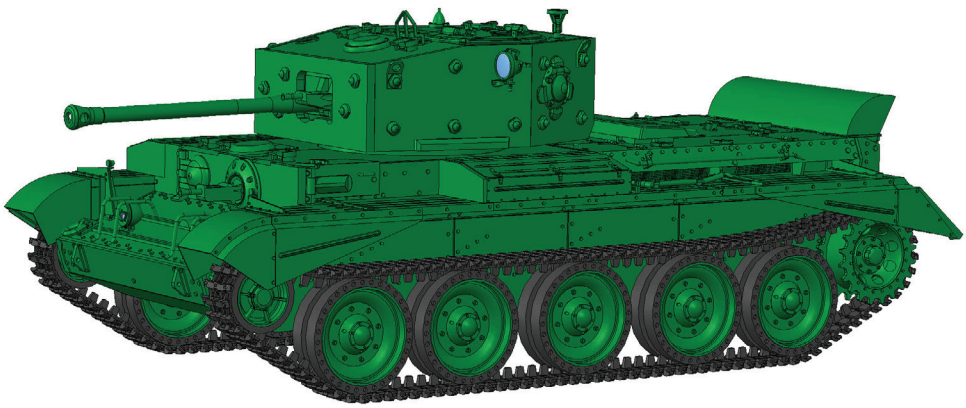

The manual contains the entire assembly of the model, except for the installation of the control unit, transmitter, battery and the final connection of the electronics.
The connection of the electronics and especially the control unit depends on the choice of the model and parts configuration.
The choice of control unit is up to you, it will greatly affect the final price of the model but also its functions.

The model in full configuration requires a sophisticated control unit.
We recommend the MTCU control unit from Kim Olsen to take advantage of the full capabilities of the model.
Of course, you can also use the most common and affordable control units, but make sure it has enough power for the motors.
Large motors of size 775 consume a lot of current.
Cannon control requires a control unit that can control servomotors.

Due to the complexity of the topic of electronics connection,
all diagrams and procedures of connection of various variants of electronics will be summarized on our forum.
On our forum, we can actively help you not only with the connection of electronics, but with the entire assembly.
At the same time, your questions and our answers on the forum will help many other enthusiasts who are looking for help.
Therefore, please address your questions about the assembly and use of the model on the forum instead of e-mailing us. Thank you.

This model is intended for advanced modelers.
Check moving parts regularly.
The screws on all wheels and servomotor arms must be secured against falling out.
Tighten the tracks sufficiently using the tensioners on the front wheels.

Due to the large weight and size of the model,
propulsion is handled by large motors and metal bevel gears.
If you need help buying these components, check out our forum.

You will find all the necessary components except the control unit, battery, receiver and transmitter in the customizable bill of materials.
Bill of materials is a separate document, you can download it here:

https://docs.google.com/spreadsheets/d/142xrjeuLH4kXfU9M0bAFwFHzrhIOs7Xbyhp-bCO0pVRY/edit?usp=sharing

Cromwell Mk.IV

Assembly guide

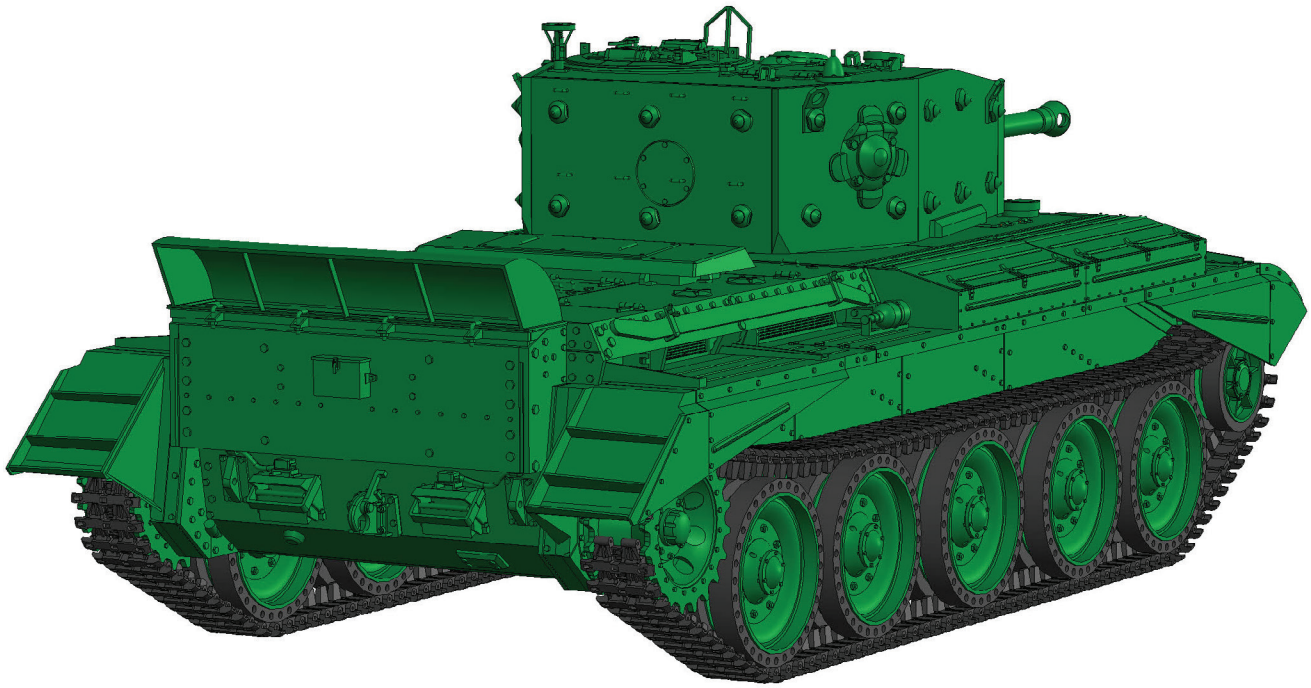

Cromwell Mk.IV
Assembly guide

Assembly 01 - Lower Hull

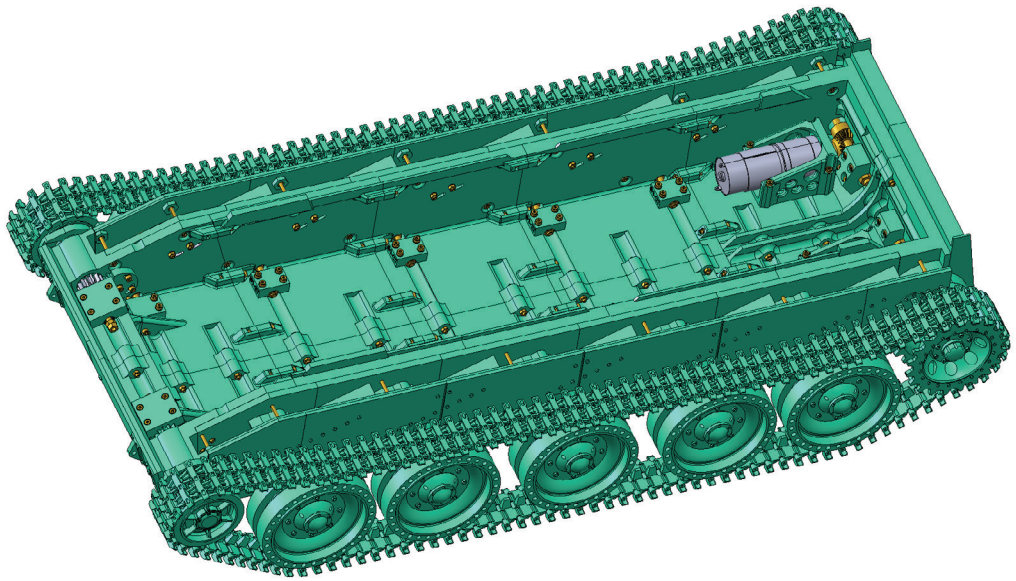

3D PRINTED PARTS:	01-01A (1x), 01-01B (1x), 01-02A (1x), 01-02B (1x), 01-03A (1x), 01-03B (1x), 01-04A (1x), 01-04B (1x), 01-05A (1x), 01-05B (1x), 01-06A (1x), 01-06B (1x), 01-07A (1x), 01-07B (1x), 01-08A (1x), 01-08B (1x), 01-09A (1x), 01-09B (1x), 01-10A (1x), 01-10B (1x), 01-10C (1x), 01-10D (1x), 01-10E (1x), 01-11A (1x), 01-11B (1x), 01-11C (1x), 01-11D (1x), 01-11E (1x), 01-12A (1x), 01-12B (1x), 01-12C (1x), 01-12D (1x), 01-12E (1x), 01-13A (1x), 01-13B (1x), 01-13C (1x), 01-13D (1x), 01-13E (1x), 01-14A (1x), 01-14B (1x), 01-14C (1x), 01-14D (1x), 01-14E (1x), 01-15A (4x), 01-15B (2x), 01-15C (2x), 01-16 (2x), 01-17 (1x), 01-18 (1x), 01-19 (2x), 01-20 (2x), 01-21 (2x), 01-22A (5x), 01-22B (5x), 01-23A (5x), 01-23B (5x), 01-24A (20x), 01-24B (10x), 01-24C (10x), 01-24D (10x), 01-25 (10x), 01-26 (2x), 01-27 (8x), 01-28 (5x), 01-29 (5x), 01-30A (1x), 01-30B (1x), 01-30C (1x), 01-30D (1x), 01-30E (1x), 01-30F (1x), 01-30G (1x), 01-30H (1x), 01-30I (1x), 01-30J (1x), 01-30K (1x), 01-31A (1x), 01-31B (1x), 01-31C (1x), 01-31D (1x), 01-31E (1x), 01-31F (1x), 01-31G (1x), 01-31H (1x), 01-31I (1x), 01-31J (1x), 01-31K (1x), 01-32 (1x), 01-33 (1x), 01-34A (2x), 01-34B (2x), 01-34C (2x), 01-35 (2x), 01-36 (2x), 01-37 (2x), 01-38 (240x),
OPTIONAL 3D PRINTED PARTS:	01-01AB (1x), 01-02AB (1x), 01-03AB (1x), 01-04AB (1x), 01-05AB (1x), 01-06AB (1x), 01-07AB (1x), 01-08AB (1x), 01-09AB (1x), 01-10AB (1x), 01-10CD (1x), 01-11AB (1x), 01-11CD (1x), 01-15AB (2x), 01-15AC (2x), 01-24AB (10x), 01-24AC (10x), 01-30AB (1x), 01-30CD (1x), 01-30EF (1x), 01-30GH (1x), 01-30IJ (1x), 01-31AB (1x), 01-31CD (1x), 01-31EF (1x), 01-31GH (1x), 01-31IJ (1x).
NON-PRINTED PARTS:	M2 nut (8x), M3 nut (13x), M4 nut (168x), M6 nut (92x), M6 self-locking nut (10x), M8 nut (18x), M4 washer (82x), M8 washer (2x), M2x8mm screw (8x), M3x16mm screw (19x), M3x30mm screw (2x), M4x20mm screw (8x), M4x30mm screw (70x), M4x40mm screw (66x), M4x50mm screw (10x), M6x80mm screw (20x), M8x80mm screw or M8x80mm threaded rod + nut (2x), M6 threaded rod -140mm long (2x), M8 threaded rod -193mm long (2x), 606zz bearing (6x17x6mm) (34x), 696zz bearing (6x15x5mm) (10x), 608zz bearing (8x22x7mm) (6x), F608zz bearing (8x22x7mm) (2x), Tension spring -wire diameter 0.3mm -outer diameter 3mm -lenght 15mm (4x), Tension spring -wire diameter 2.5mm -outer diameter 20mm -lenght 70mm (10x), Pin -diameter 1mm -lenght 50mm (2x), Pin -diameter 2mm -lenght 46,5mm (240x), Motors - size 775 with built-in 42mm diameter planetary gearbox - 200-300rpm (2x), Bevel Gear - module 1.5, 20 teeth, outside diameter 31mm, 90 Degrees Meshing Angle inner hole diameter 8mm, (4x) - **pay attention to the axis diameter of your motors**.You may need two bevel gears with a inner hole diameter 10mm (2x8mm and 2x10mm in total).

Assembly 01 - Lower Hull

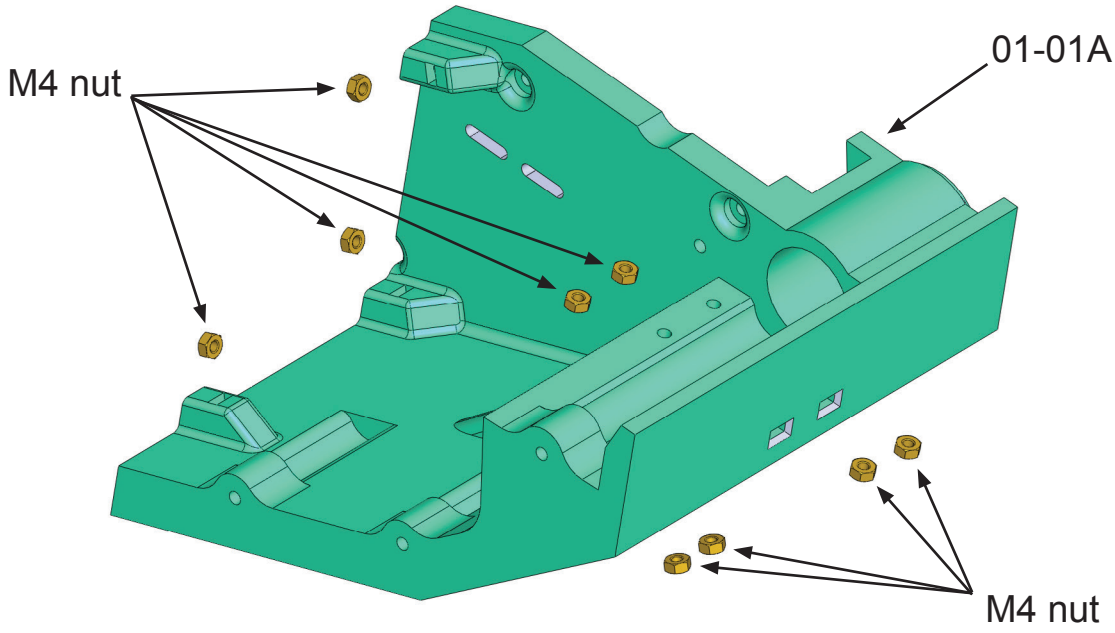

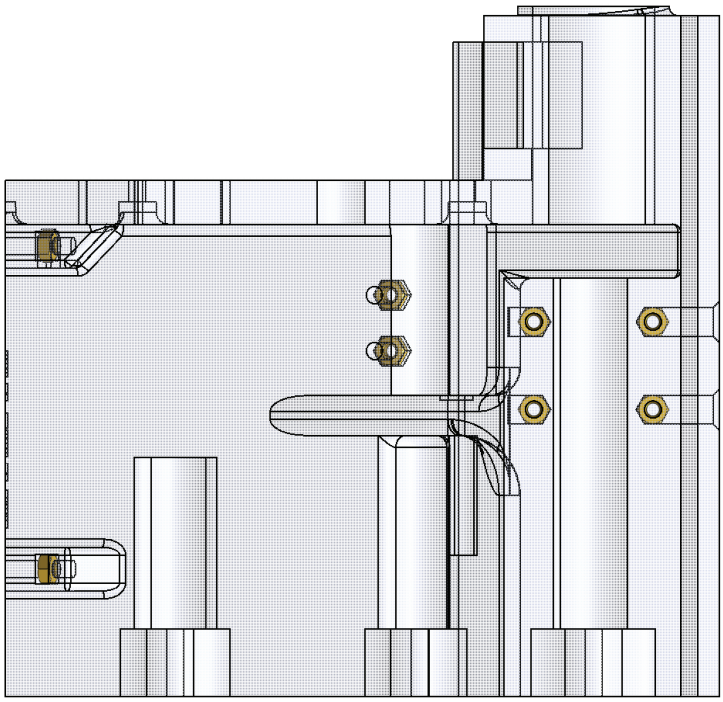

Insert 9 M4 nuts into part 01-01A (or 01-01AB).

Assembly 01 - Lower Hull

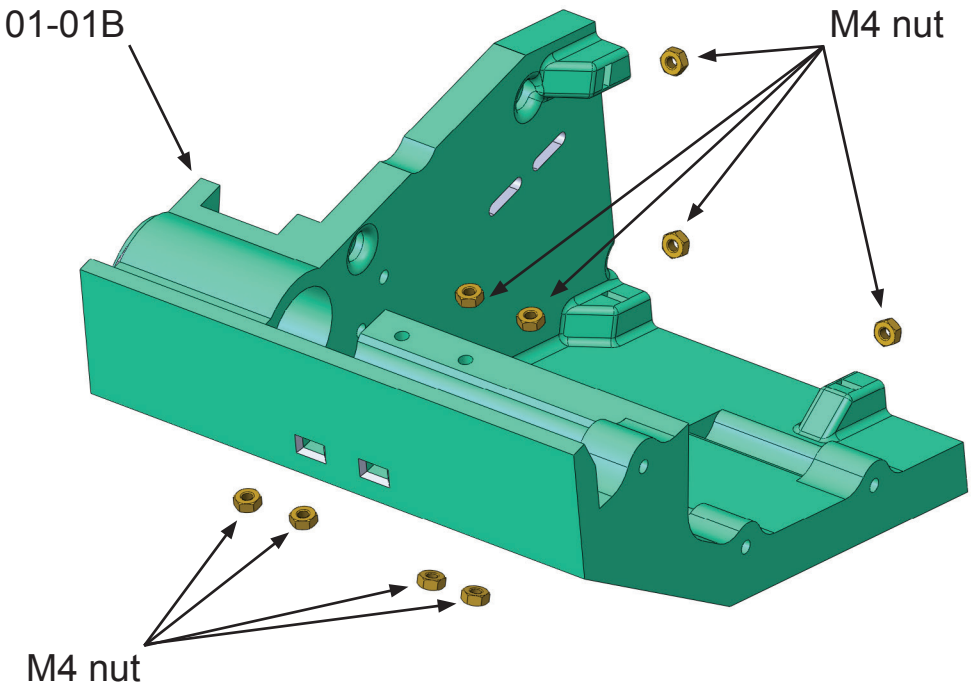

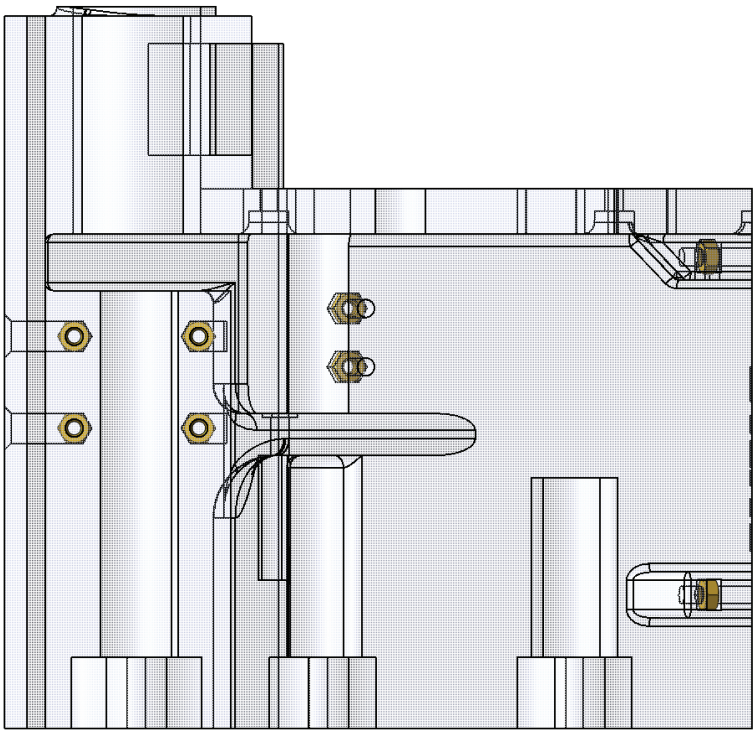

Insert 9 M4 nuts into part 01-01B (or 01-01AB).

Assembly 01 - Lower Hull

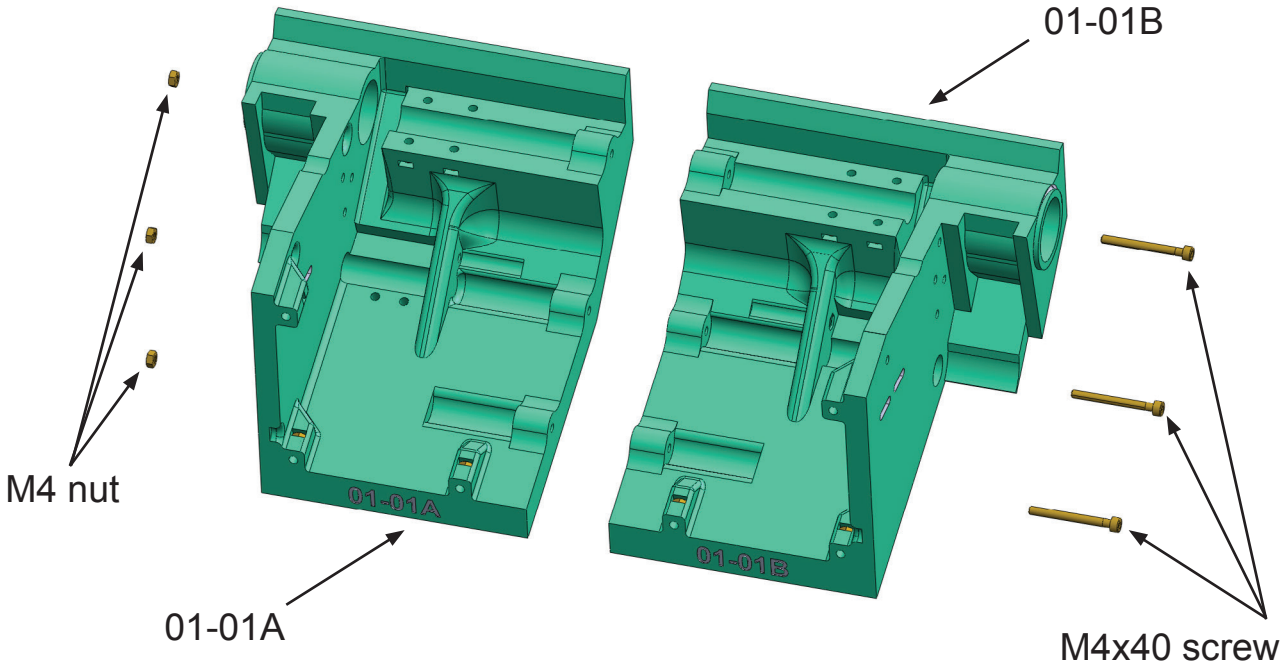

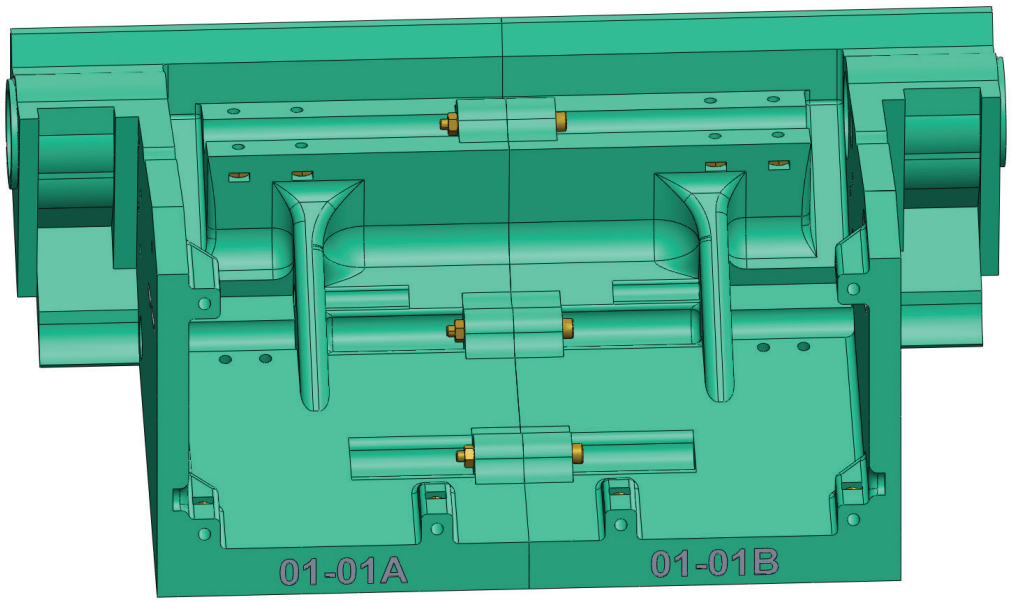

Glue parts 01-01A and 01-01B. Use 3 M4x40 screws and 3 M4 nuts.
These help with precise gluing and strengthen the structure.
Skip this step if you are using part 01-01AB.

Assembly 01 - Lower Hull

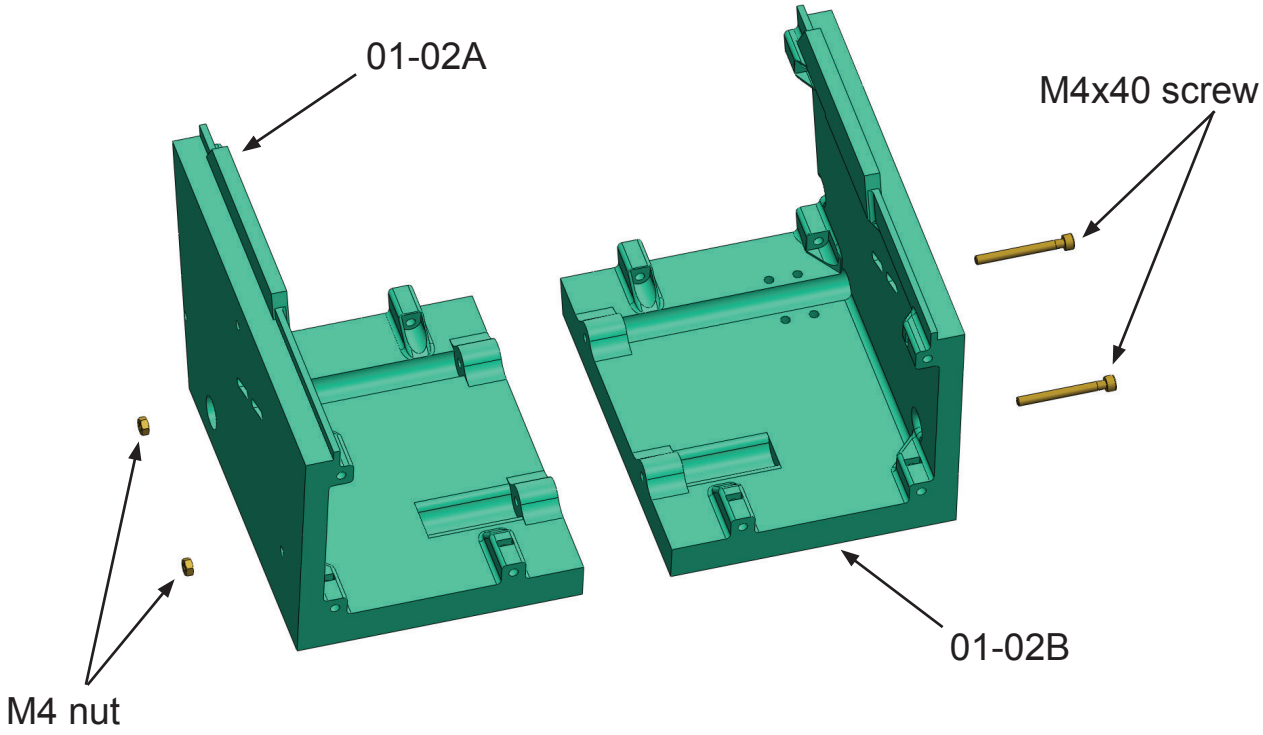

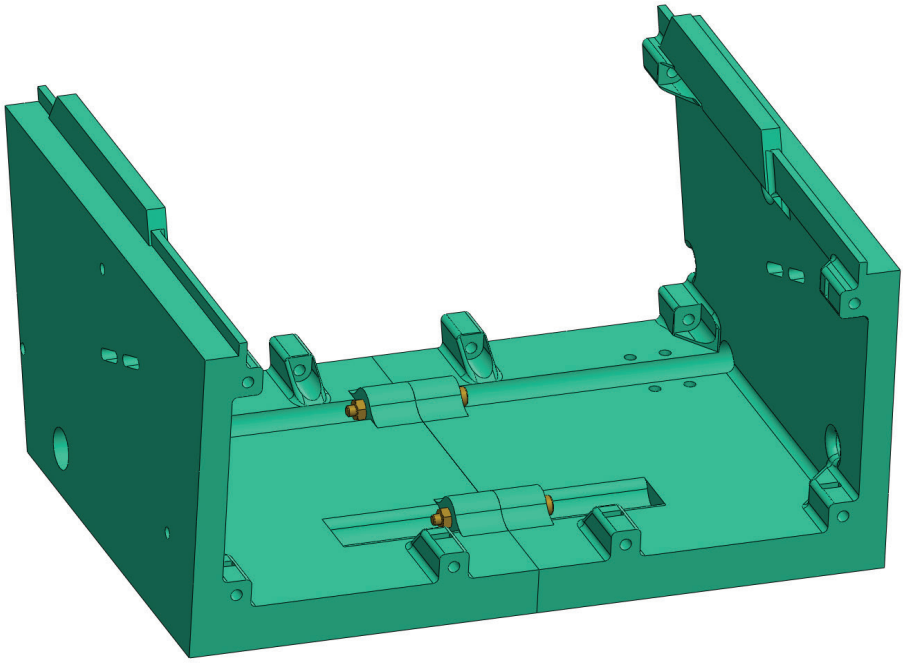

Glue parts 01-02A and 01-02B. Use 2 M4x40 screws and 2 M4 nuts.
Skip this step if you are using part 01-02AB.

Assembly 01 - Lower Hull

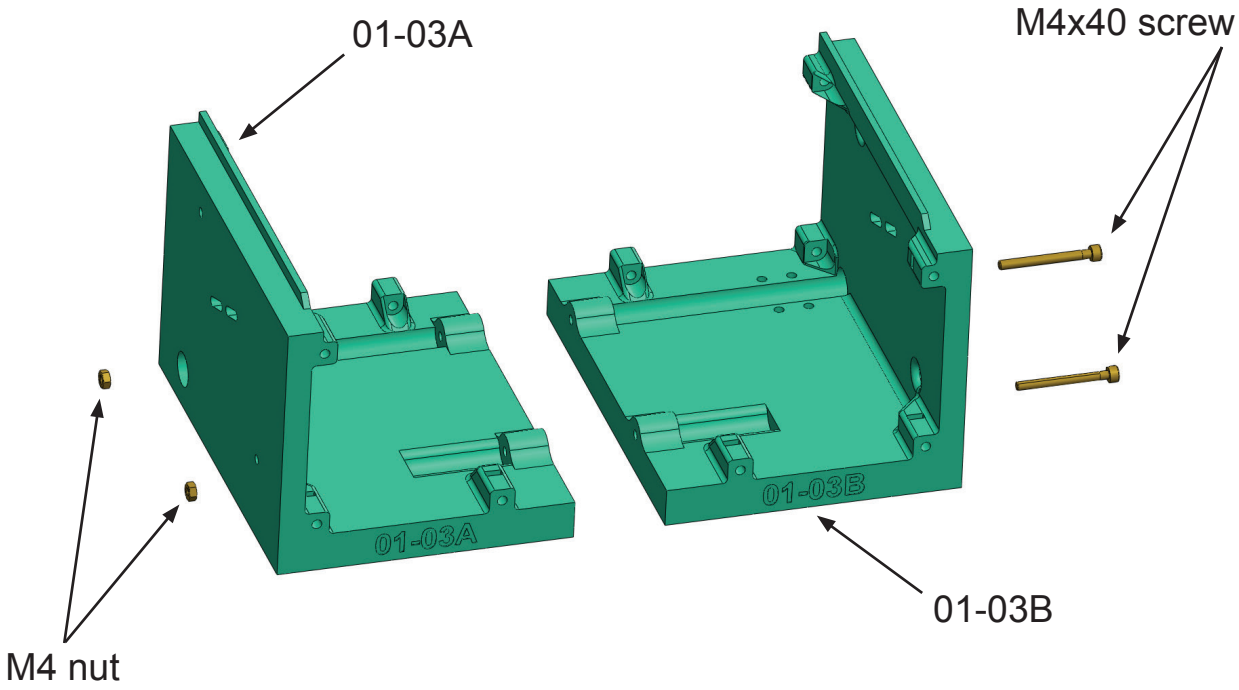

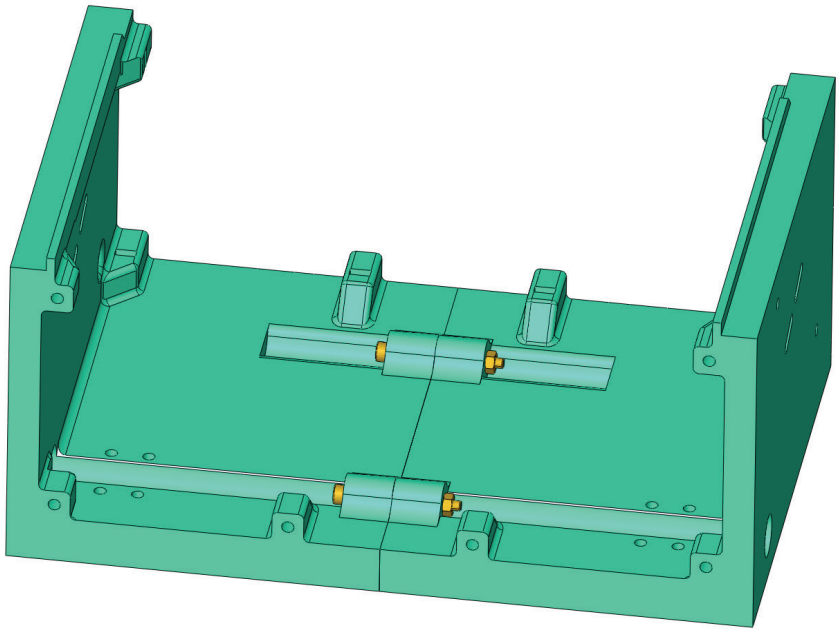

Glue parts 01-03A and 01-03B. Use 2 M4x40 screws and 2 M4 nuts.
Skip this step if you are using part 01-03AB.

Assembly 01 - Lower Hull

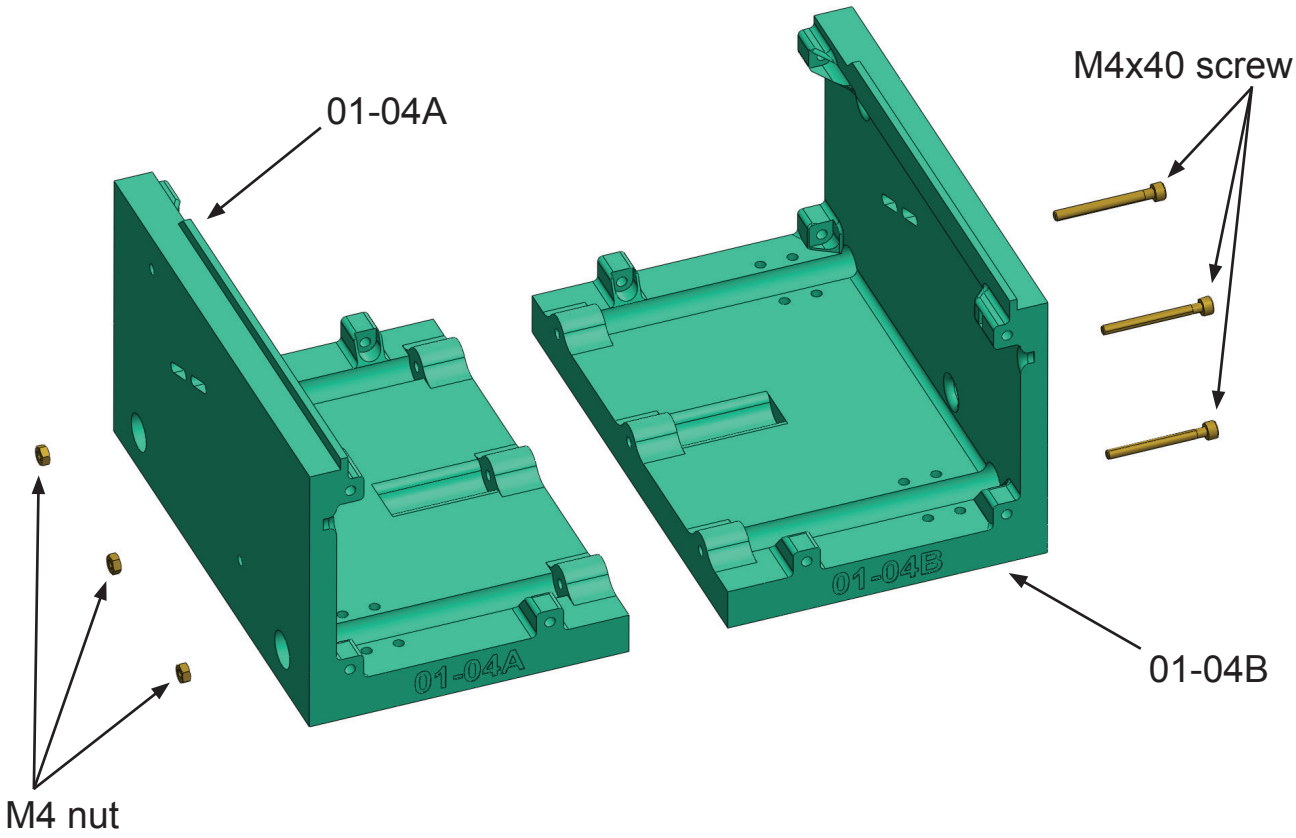

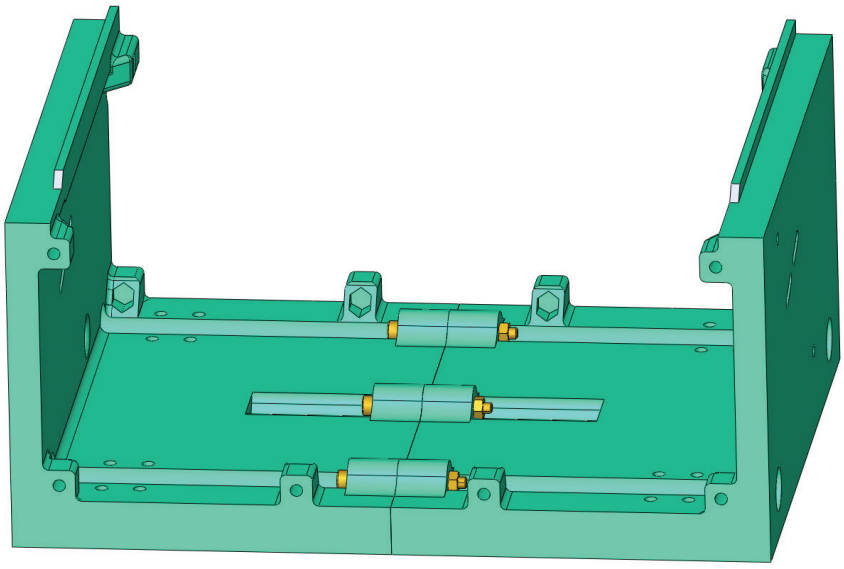

Glue parts 01-04A and 01-04B. Use 3 M4x40 screws and 3 M4 nuts.
Skip this step if you are using part 01-04AB.

Assembly 01 - Lower Hull

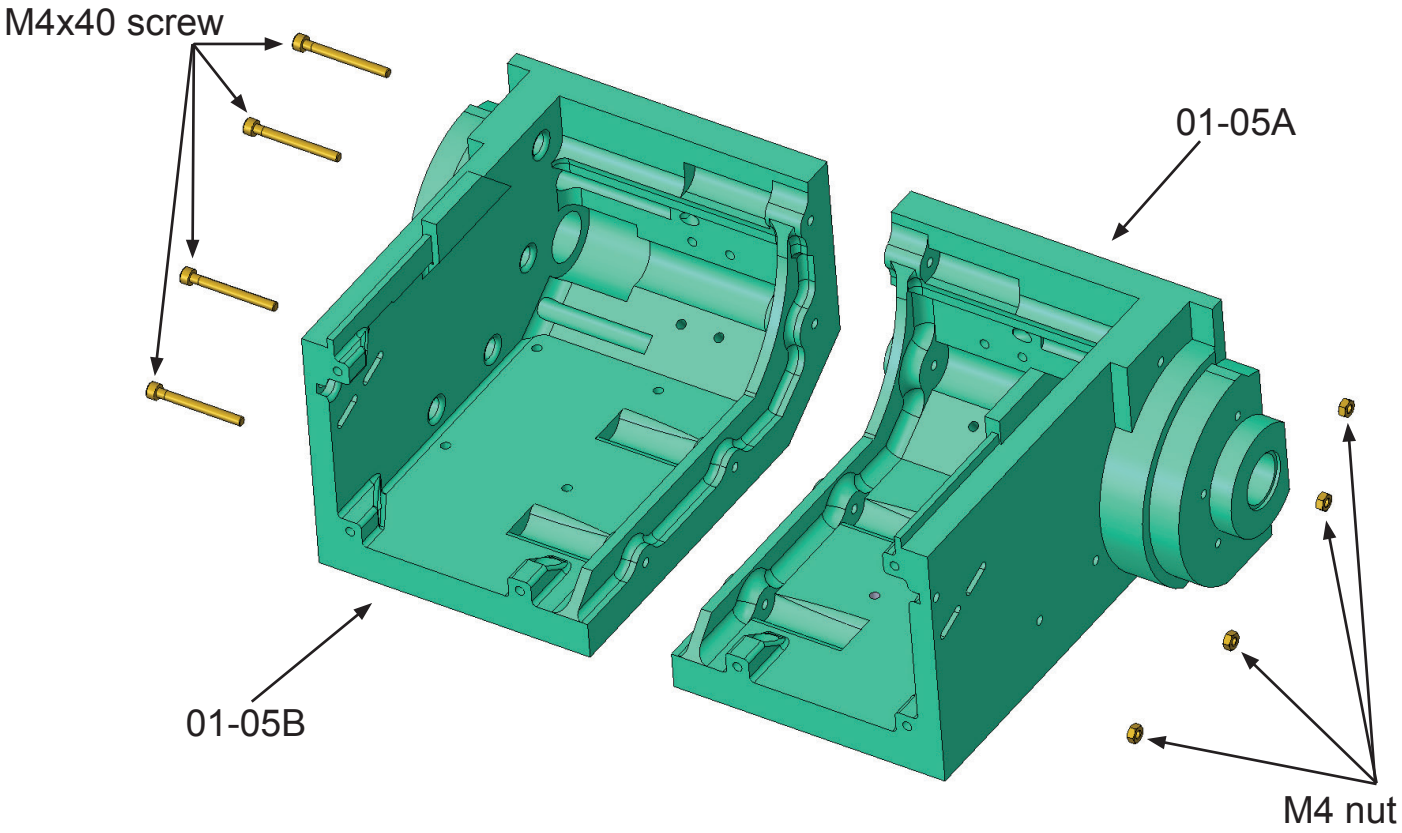

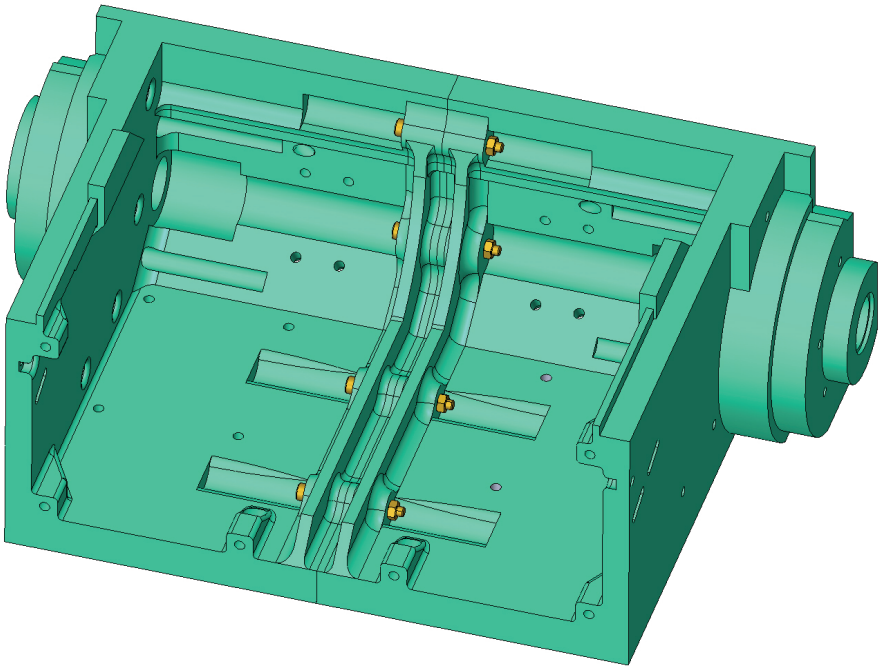

Glue parts 01-05A and 01-05B. Use 4 M4x40 screws and 4 M4 nuts.
Skip this step if you are using part 01-05AB.

Assembly 01 - Lower Hull

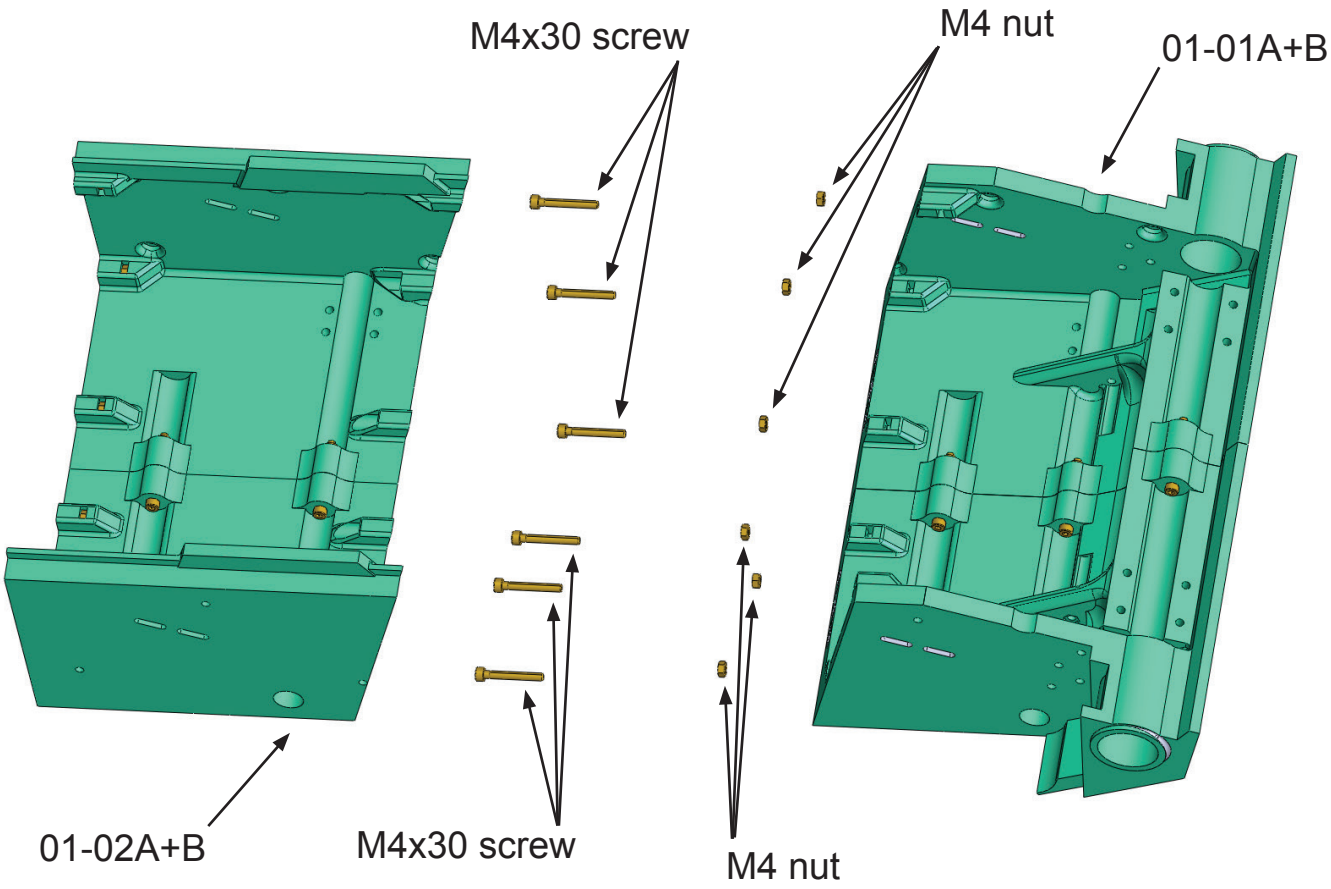

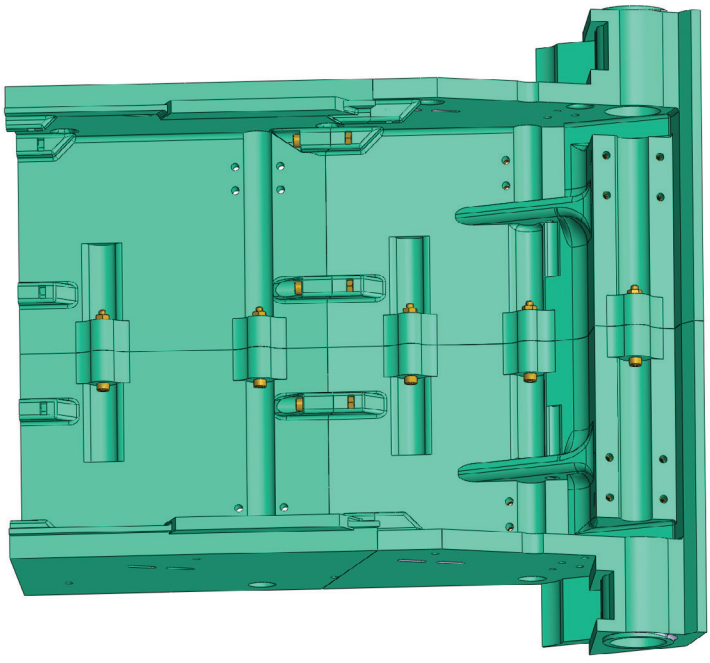

Glue parts 01-02A+B and 01-01B+B. Use 6 M4x30 screws and 6 M4 nuts.
These help with precise gluing and strengthen the structure.

Assembly 01 - Lower Hull

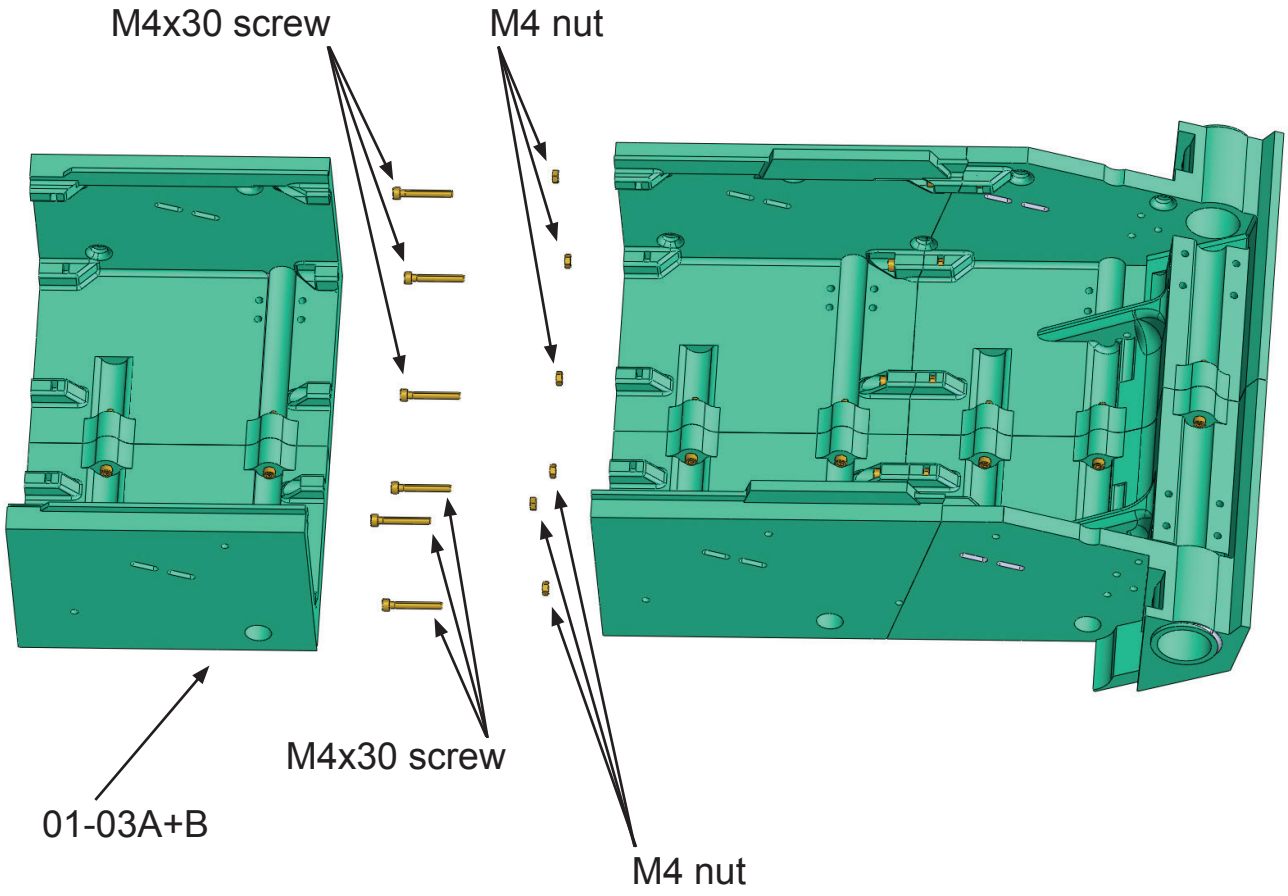

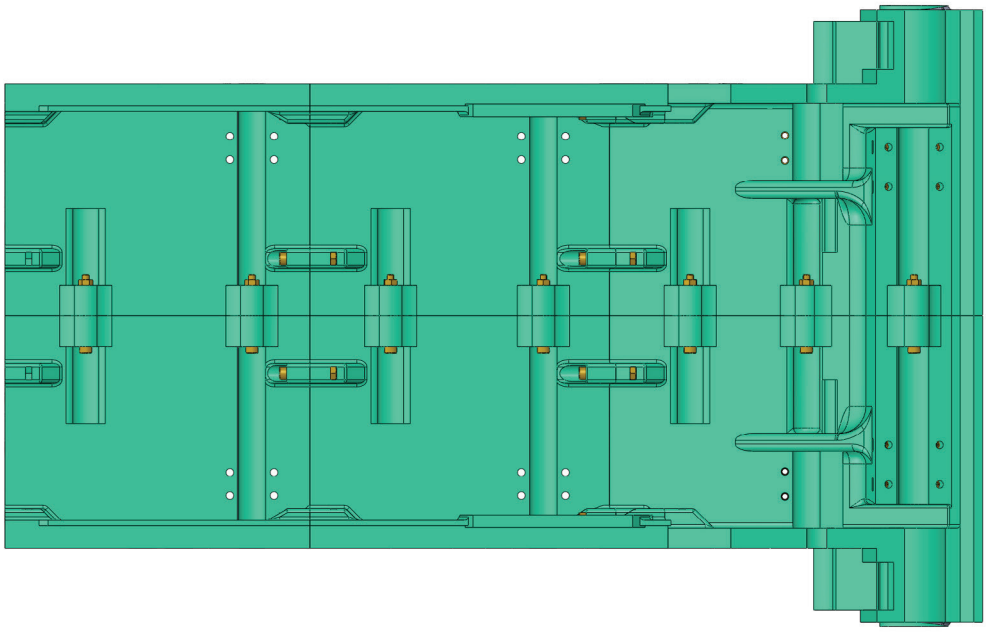

Glue parts 01-03A+B. Use 6 M4x30 screws and 6 M4 nuts.

Assembly 01 - Lower Hull

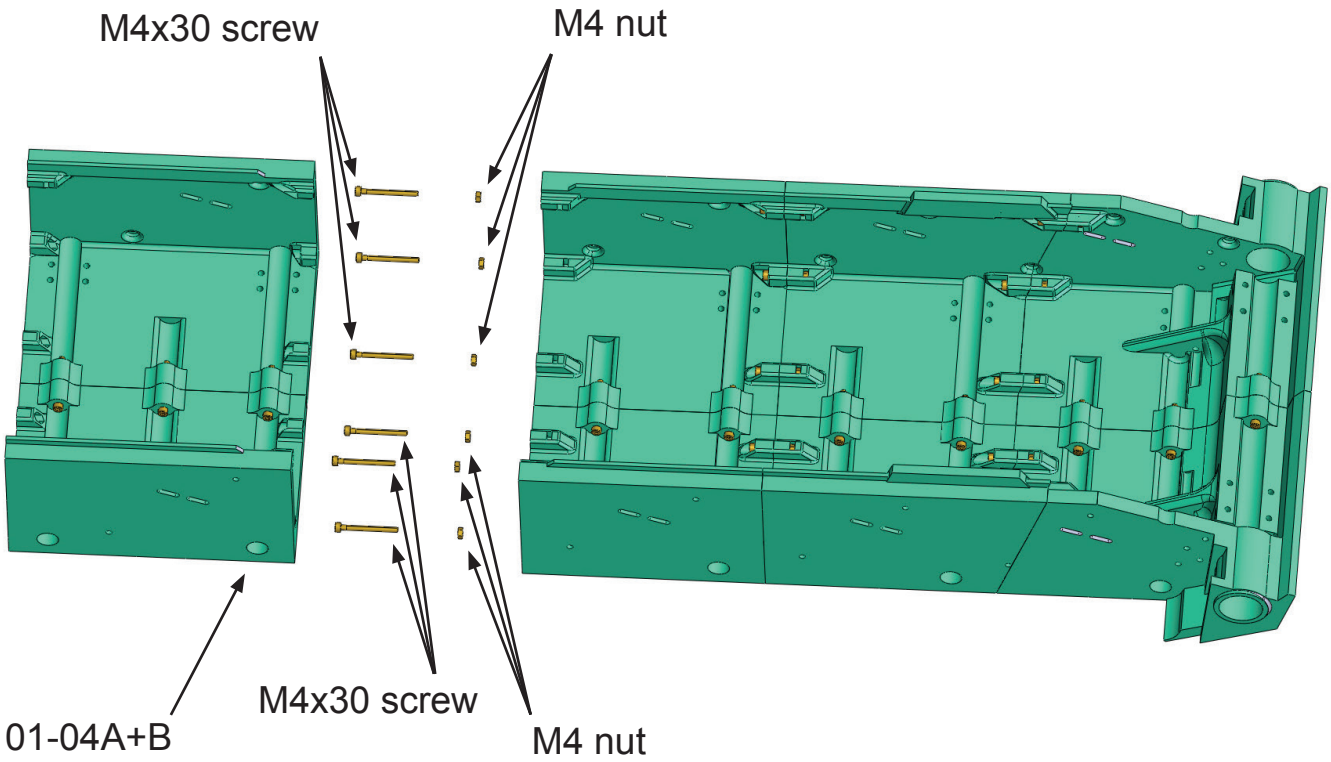

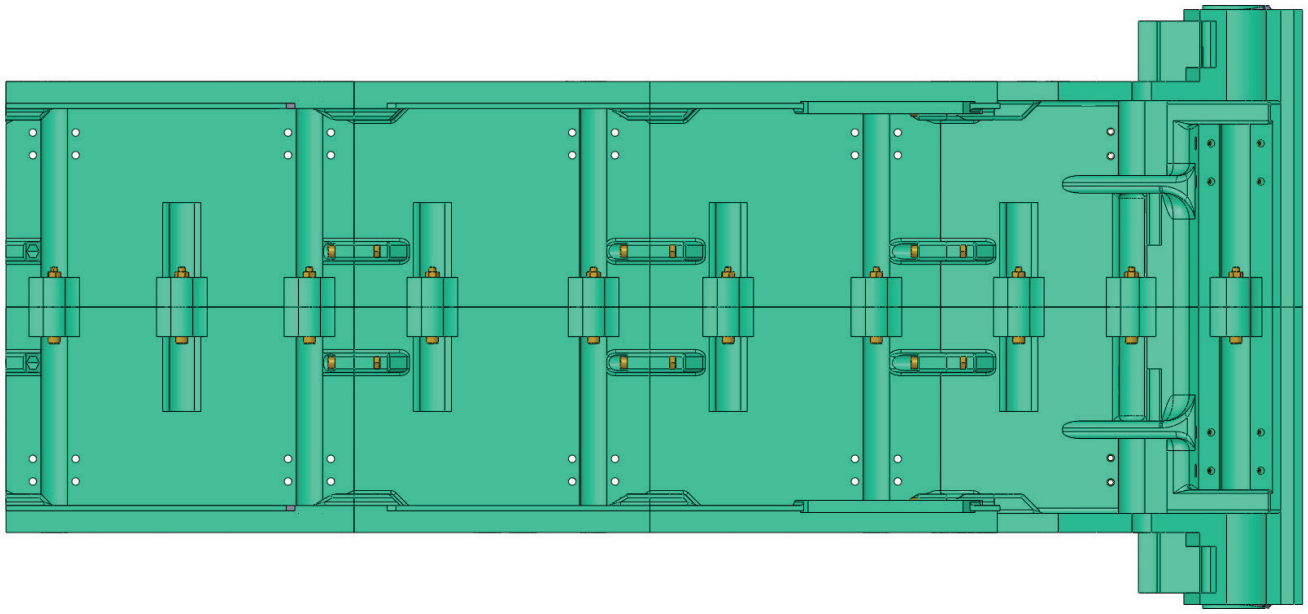

Glue parts 01-04A+B. Use 6 M4x30 screws and 6 M4 nuts.

Assembly 01 - Lower Hull

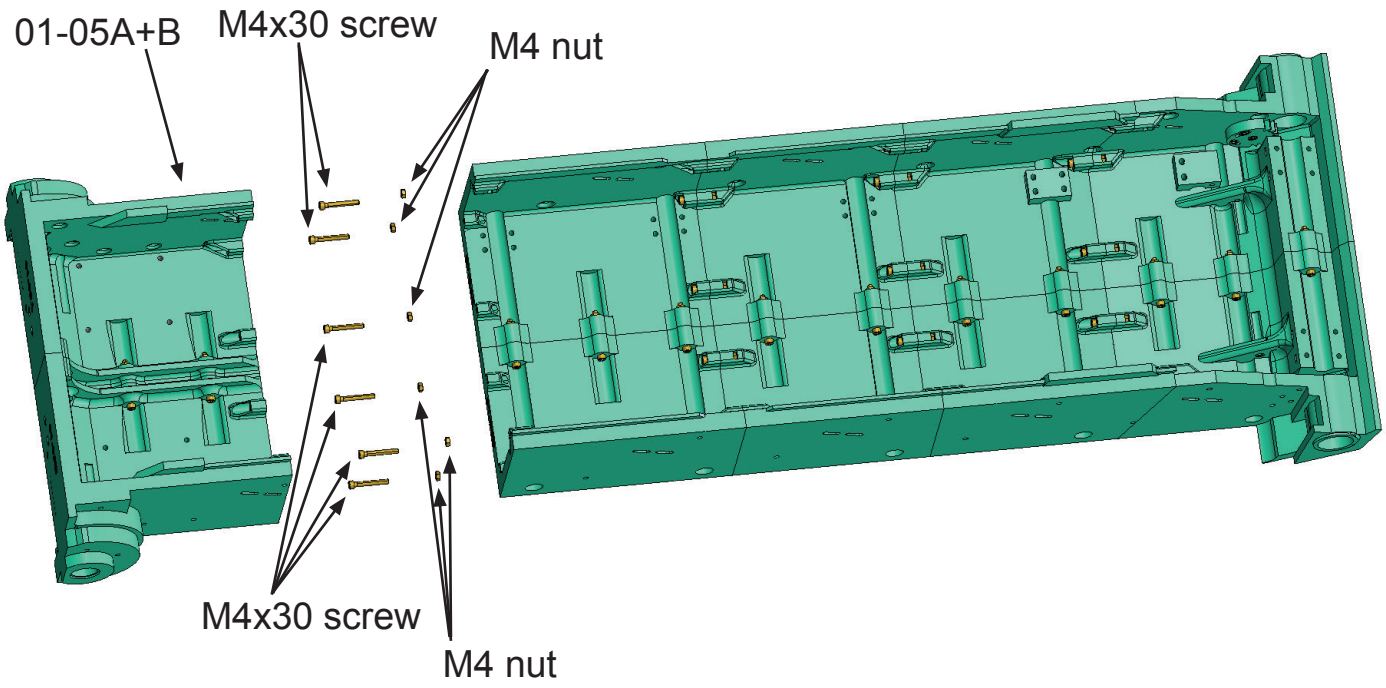

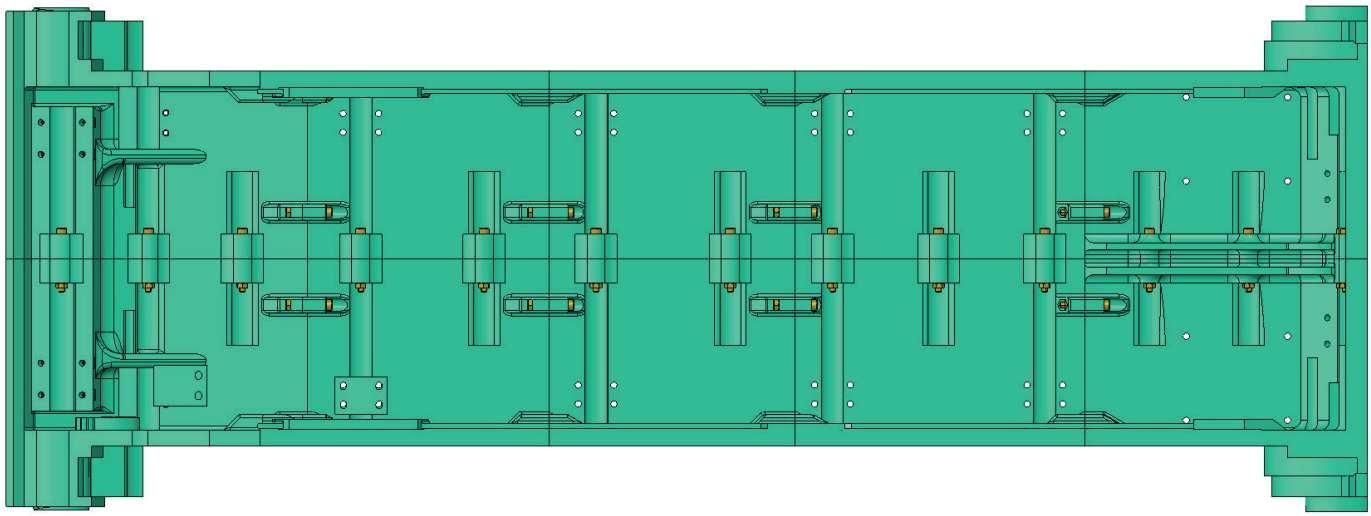

Glue parts 01-05A+B. Use 6 M4x30 screws and 6 M4 nuts.

Assembly 01 - Lower Hull

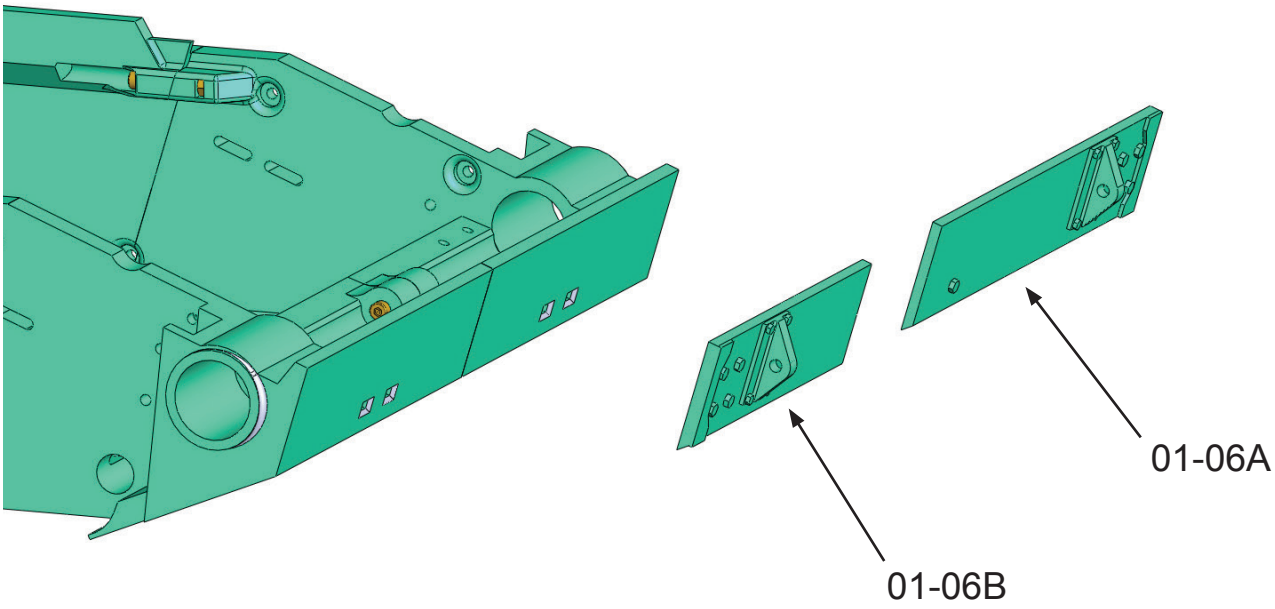

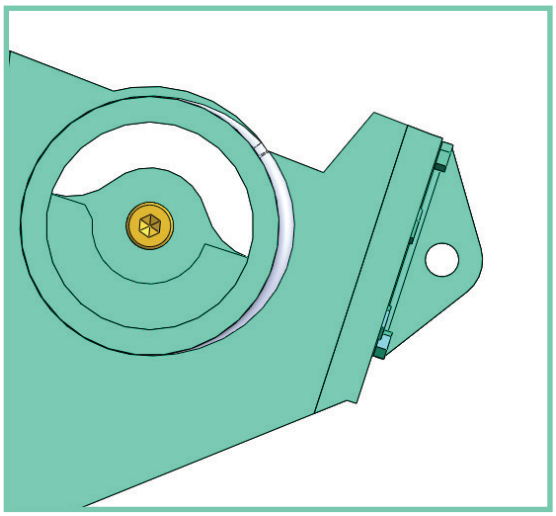

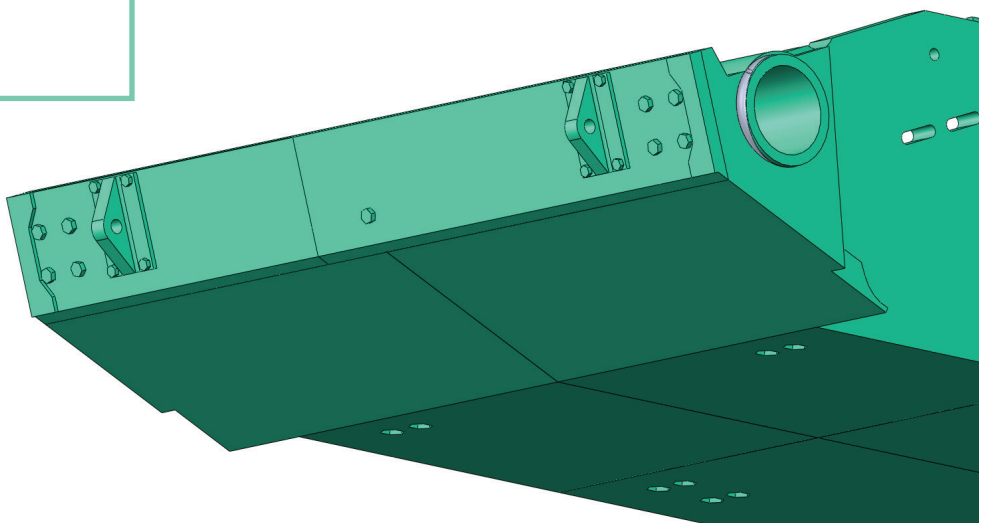

Glue parts 01-06A and 01-06B (or 01-06AB).
Make sure all nuts are inserted in parts 01-01A and 01-01B and are in the correct position.
It will not be possible to insert them or adjust their position later!!!

Assembly 01 - Lower Hull

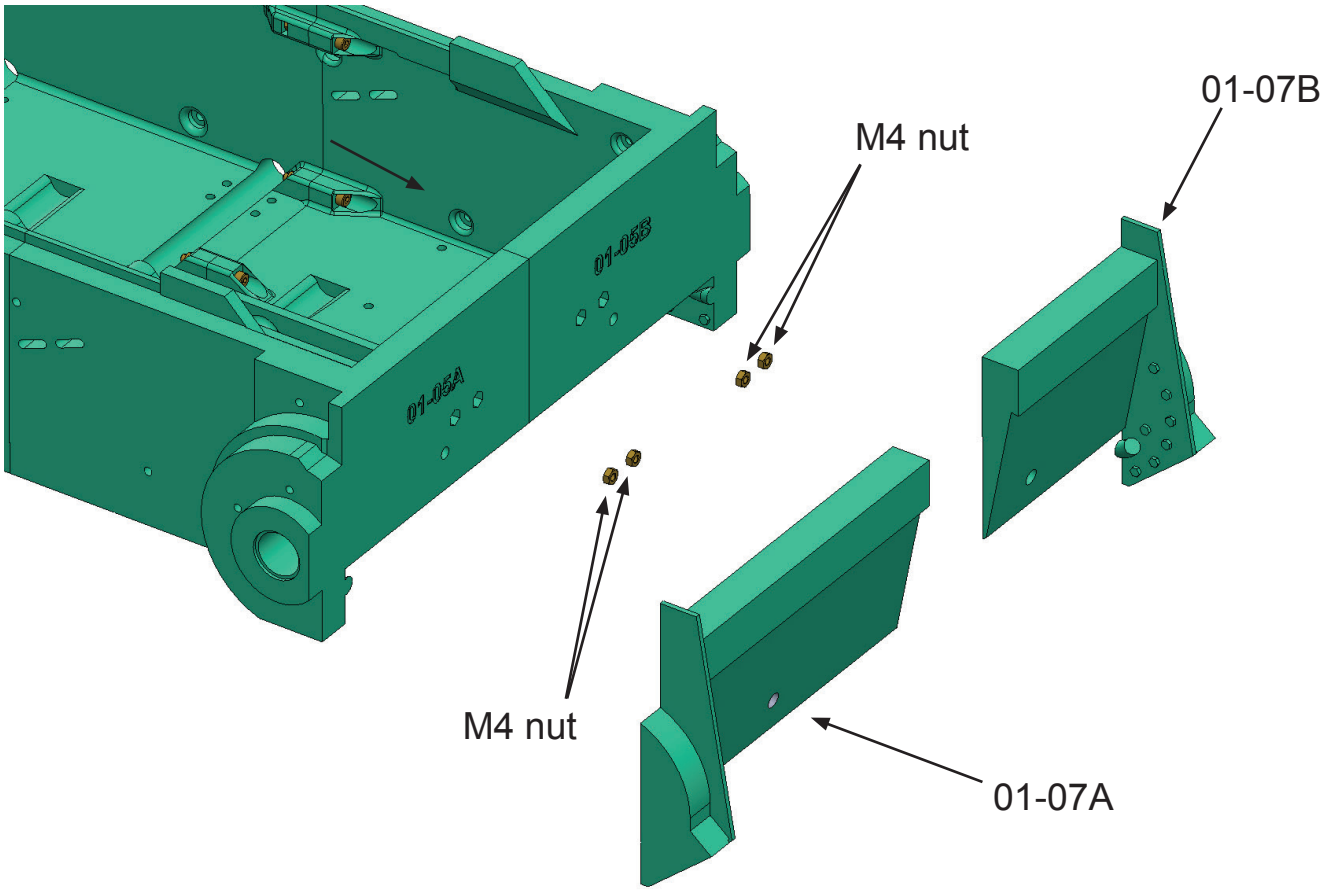

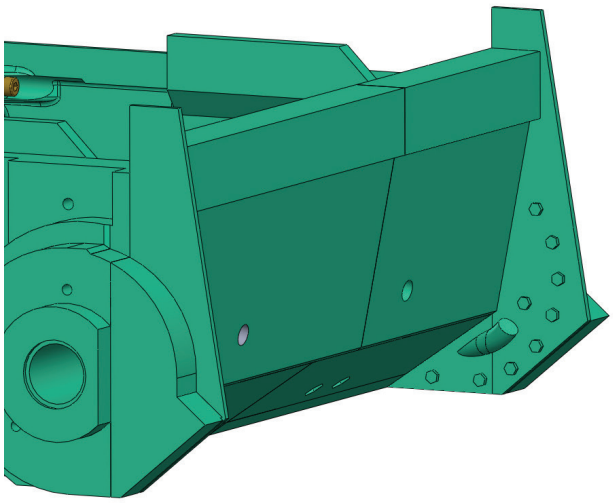

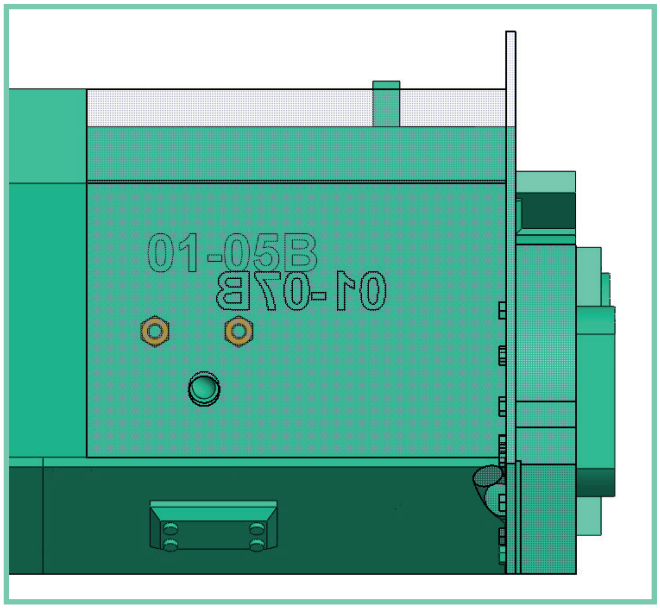

Insert 4 M4 nuts into parts 01-05A and 01-05B.
Make sure all nuts are in the correct position.
It will not be possible to insert them or adjust their position later!!!
Glue parts 01-07A and 01-07B (or 01-07AB).

Assembly 01 - Lower Hull

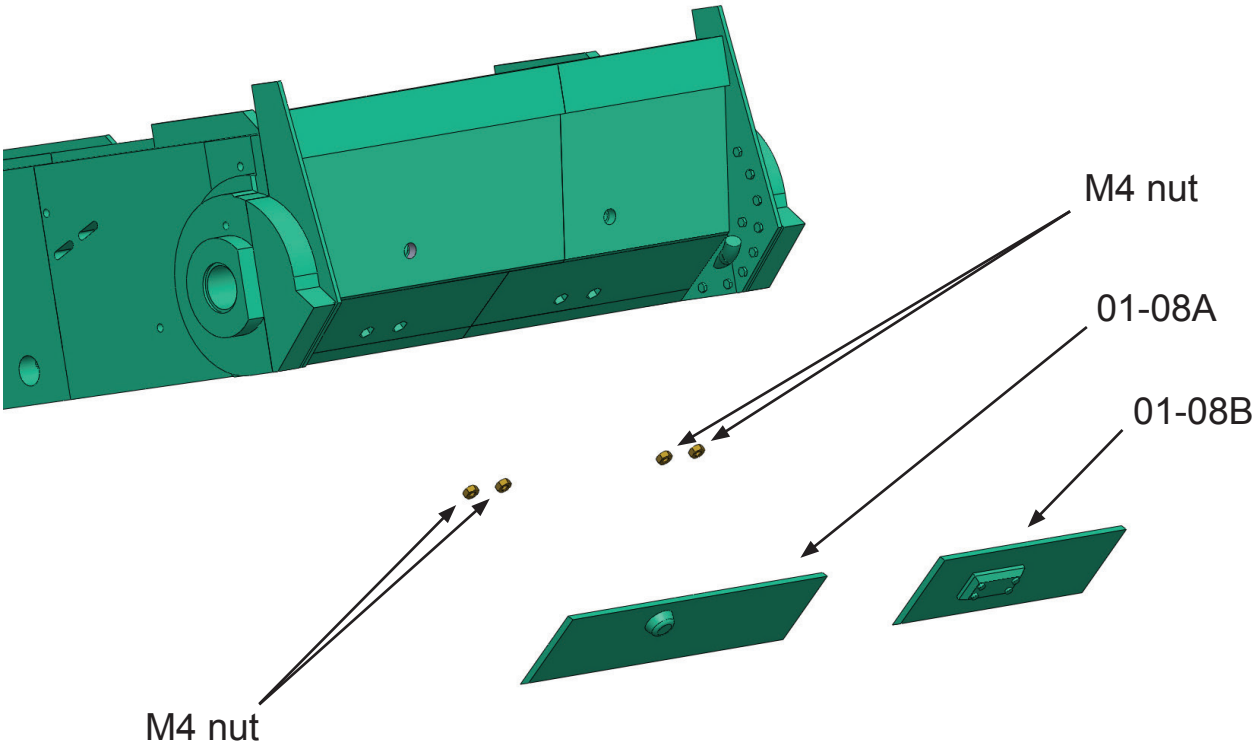

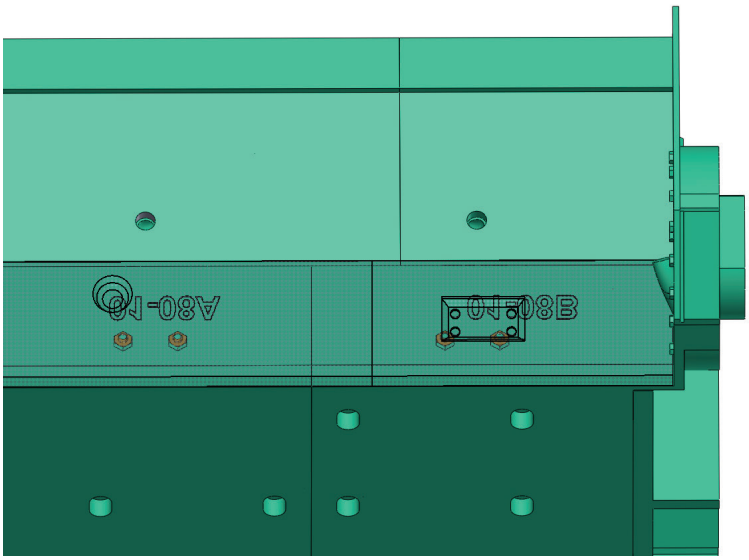

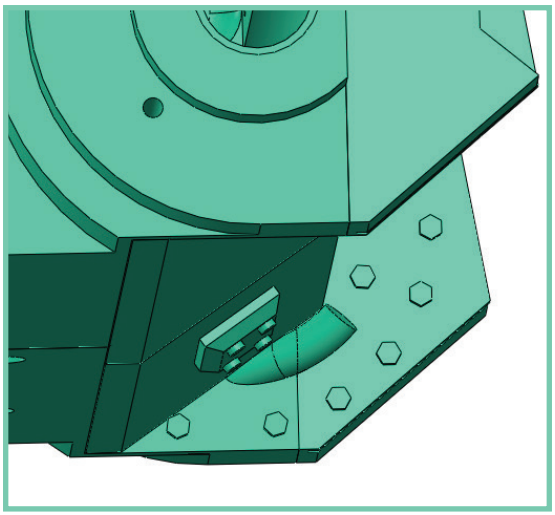

Insert 4 M4 nuts into parts 01-05A and 01-05B.
Make sure all nuts are in the correct position.
It will not be possible to insert them or adjust their position later!!!
Glue parts 01-08A and 01-08B (or 01-08AB).
Note the alignment of the bottom edge on the picture in the frame.

Assembly 01 - Lower Hull

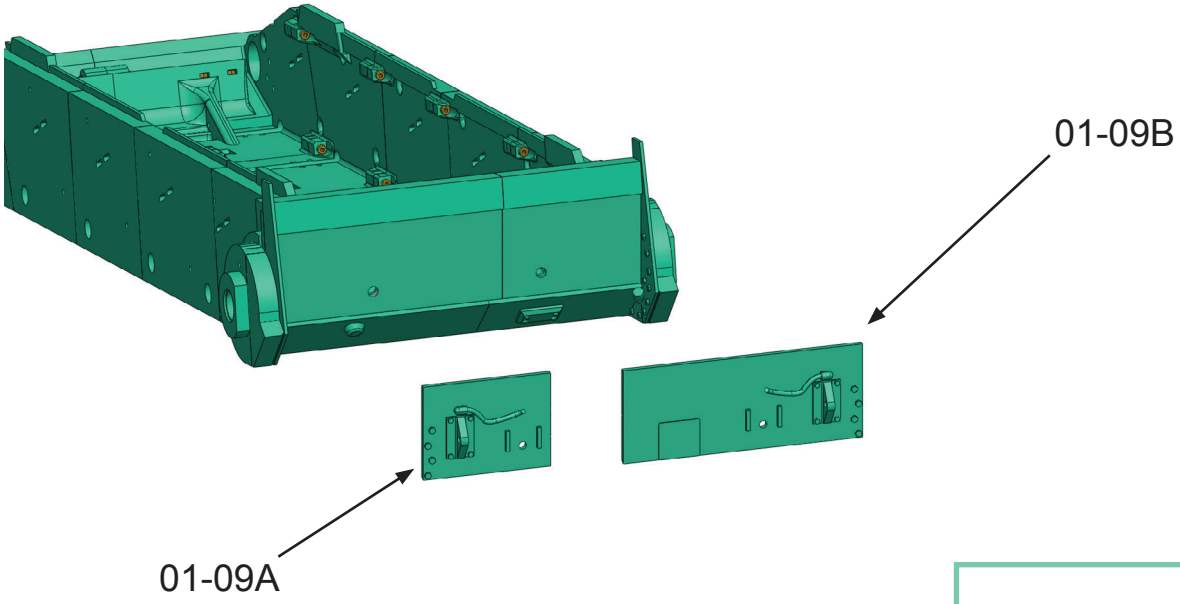

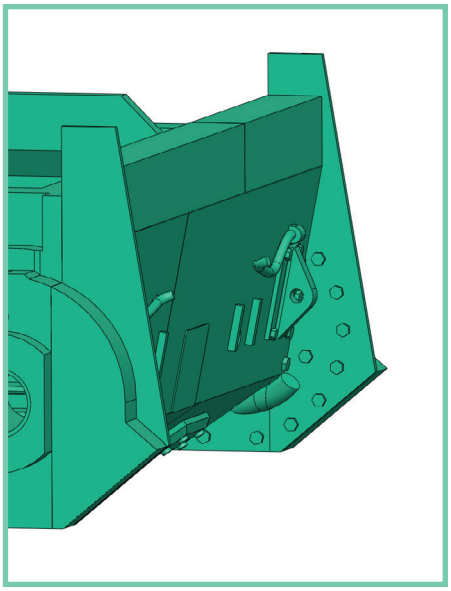

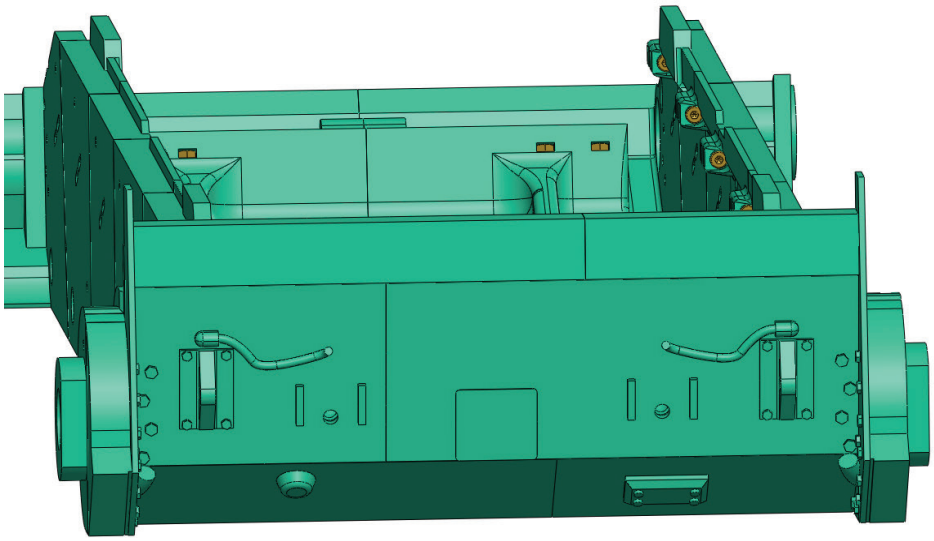

Glue parts 01-09A and 01-09B (or 01-09AB).

Assembly 01 - Lower Hull

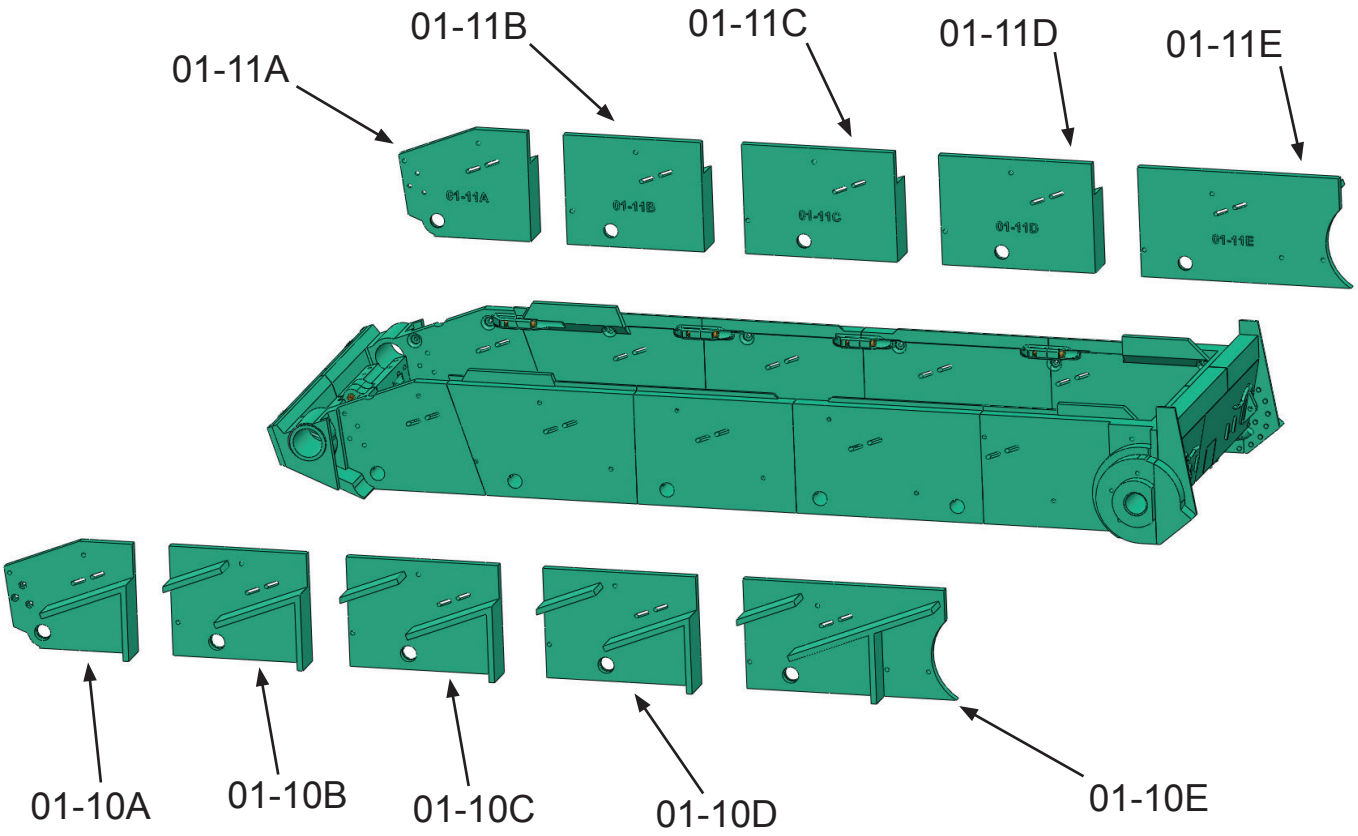

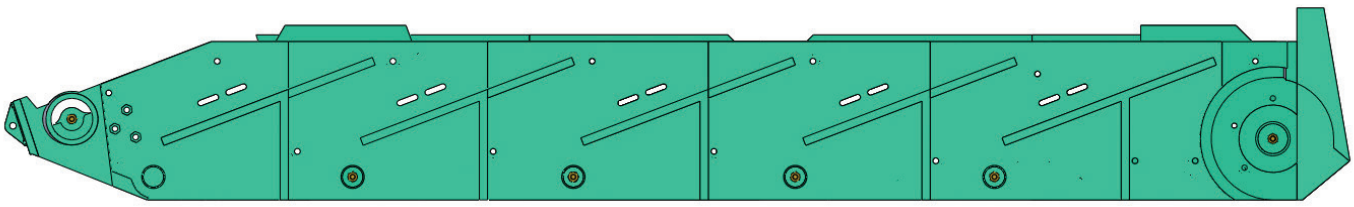

Glue parts 01-10A to 01-10E.
On the other side of the vehicle, glue parts 01-11A to 01-11E.
You can use the larger parts 01-10AB, 01-10CD, 01-11AB and 01-11CD.

Assembly 01 - Lower Hull

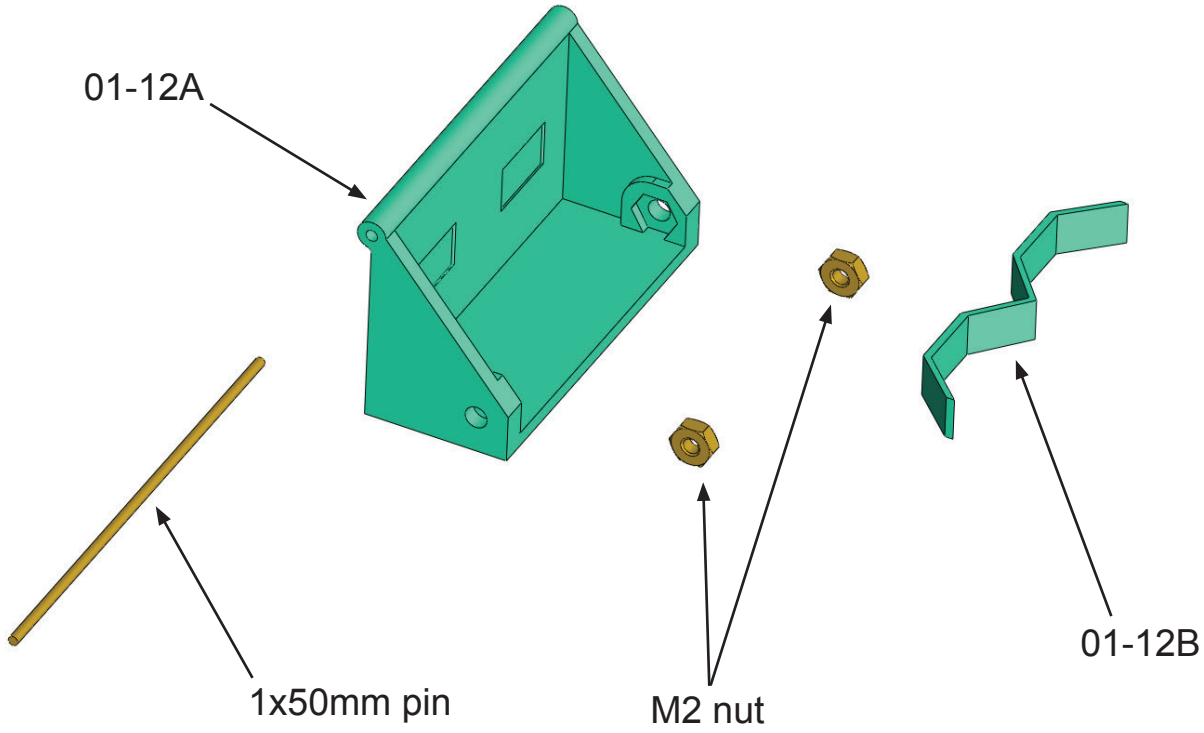

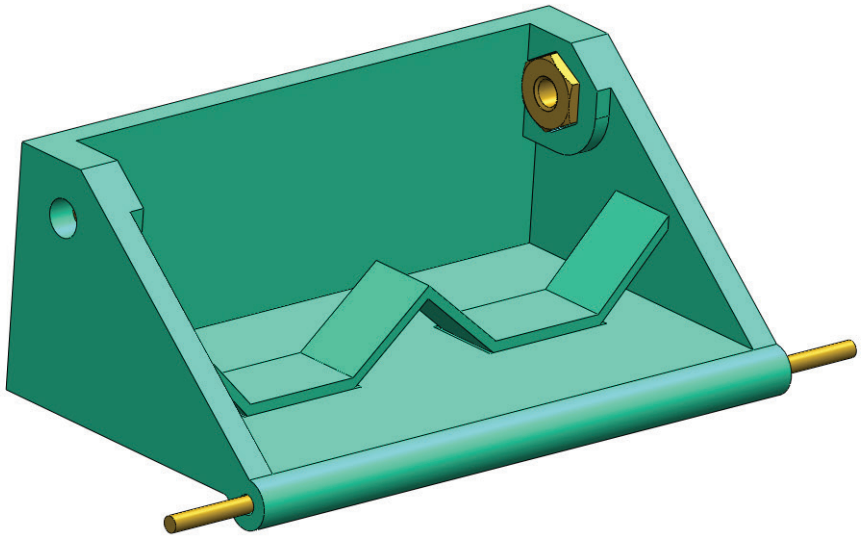

Insert two M2 nuts and a 1mm diameter, 50mm long pin (wire) into part 01-12A.
Glue part 01-12B to part 01-12A.

Assembly 01 - Lower Hull

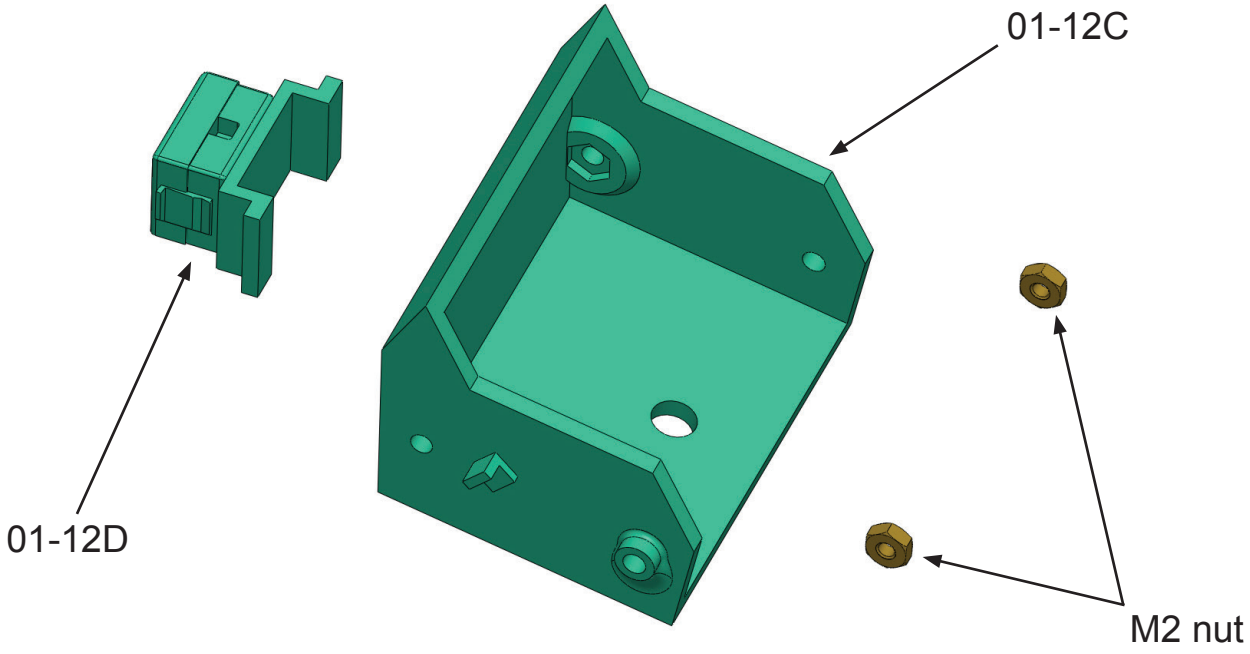

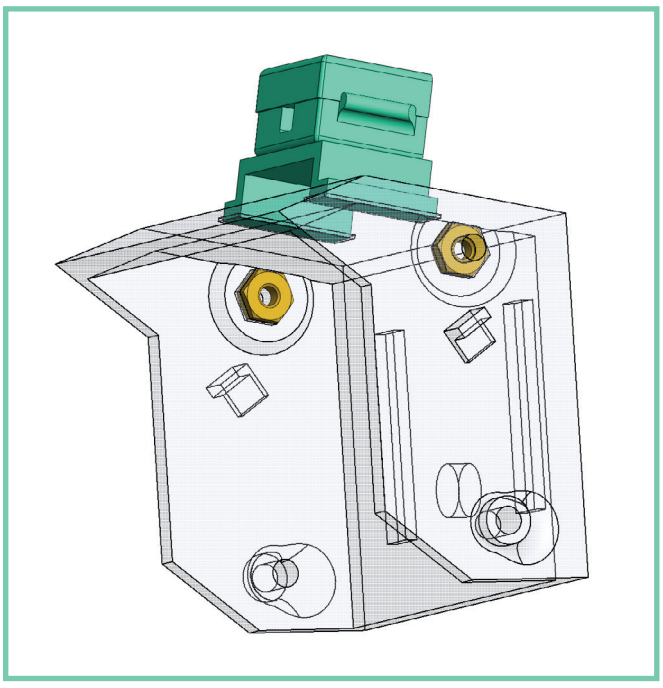

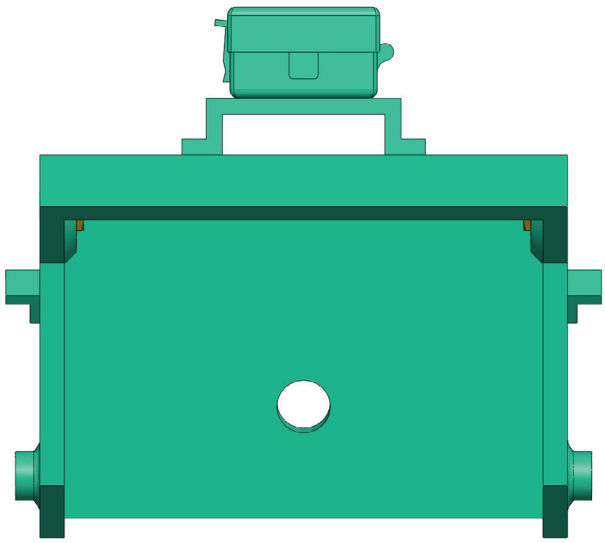

Insert two M2 nuts into part 01-12C.
Glue part 01-12D to part 01-12C.

Assembly 01 - Lower Hull

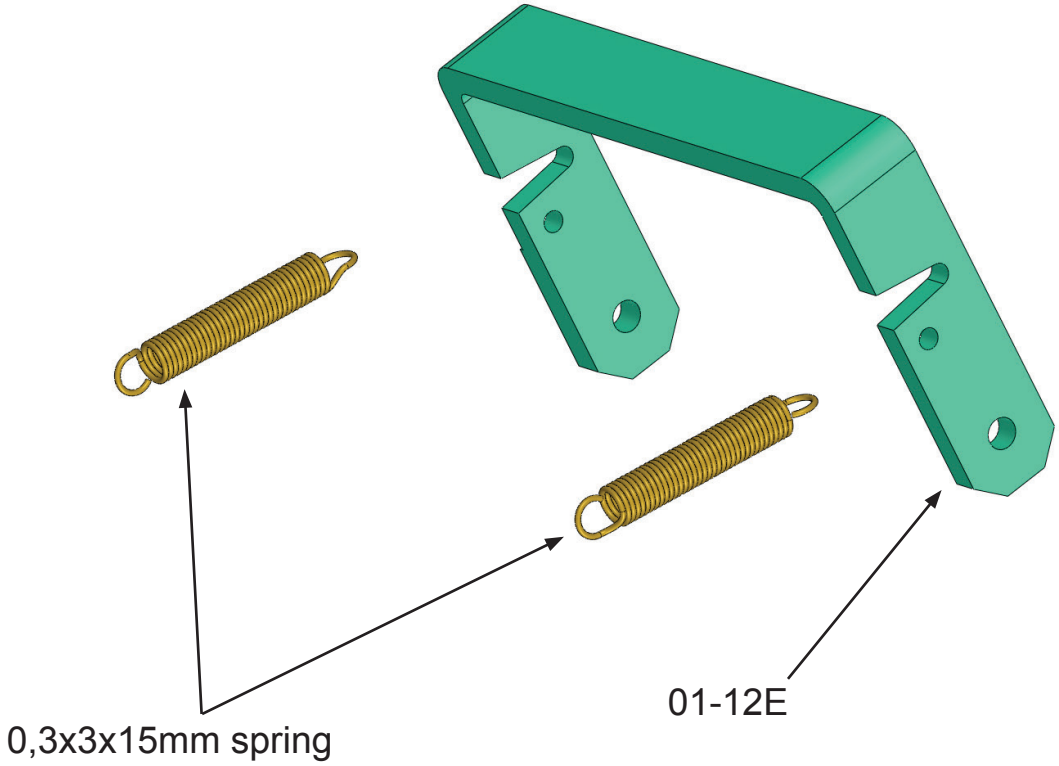

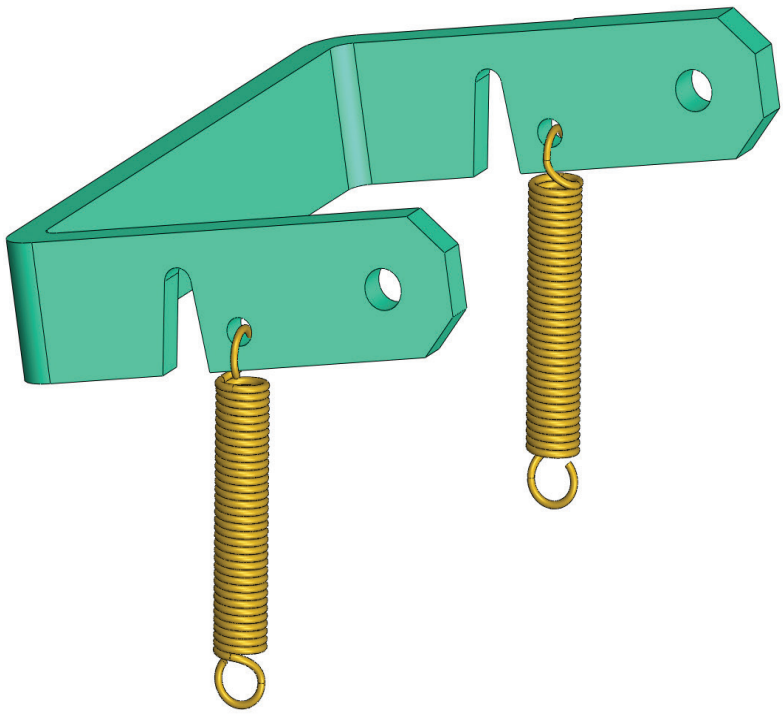

Insert two springs (0,3x3x15mm) into part 01-12E.

Assembly 01 - Lower Hull

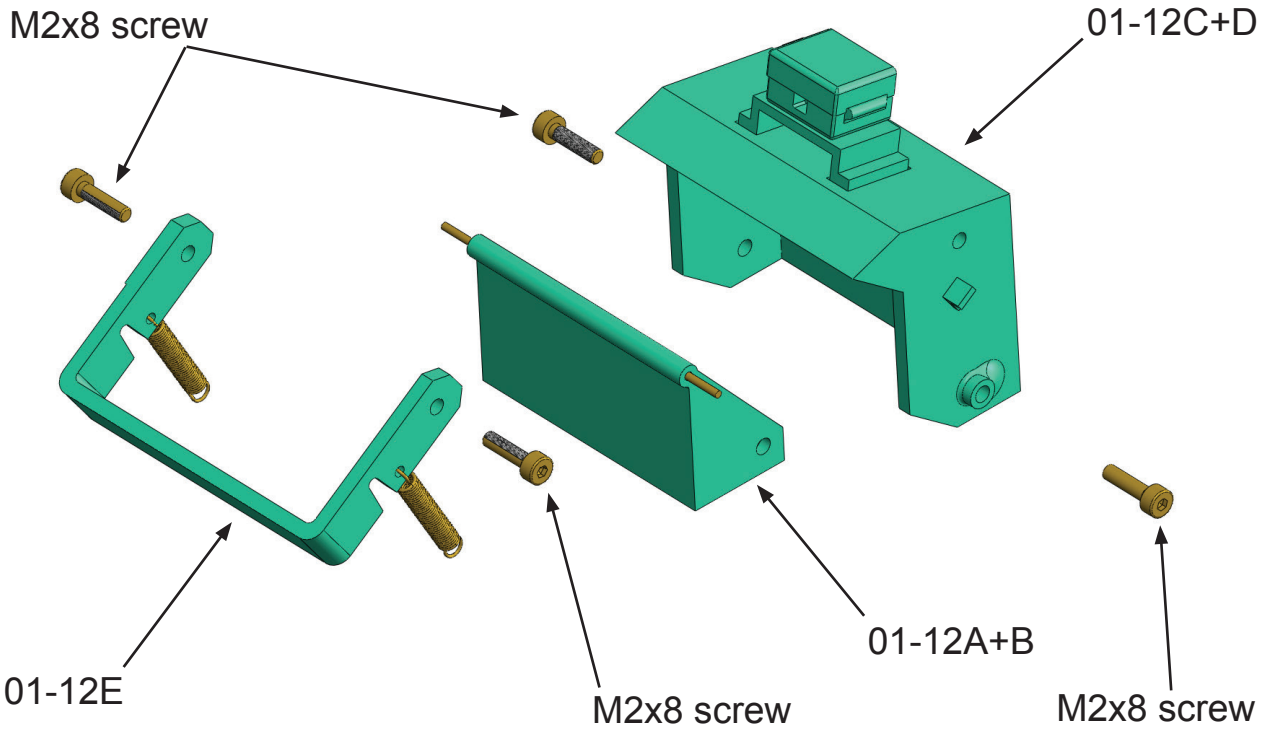

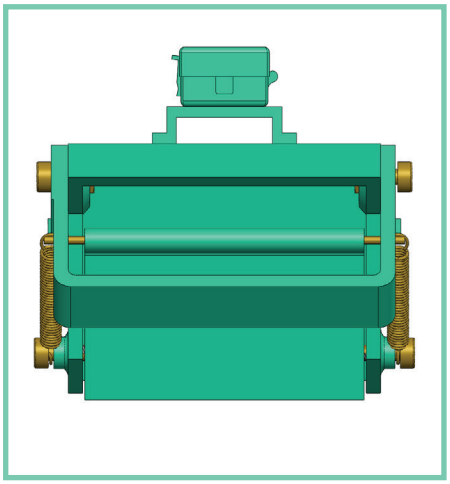

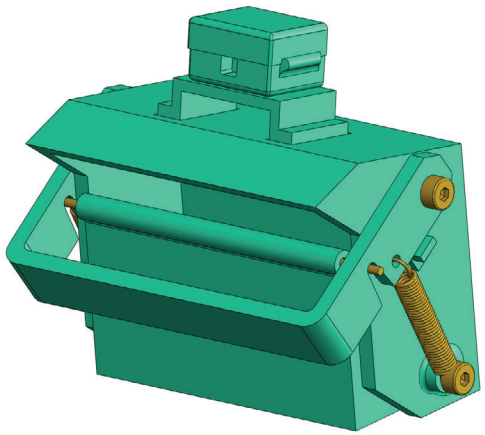

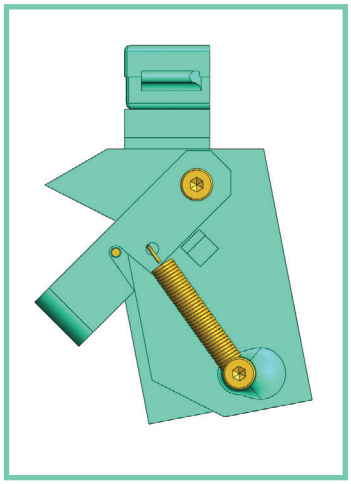

Connect the assemblies of parts 01-12A+B, 01-12C+D and part 01-12E using four M2x8 screws.
Insert the free side of the springs under the M2x8 screw head.

Assembly 01 - Lower Hull

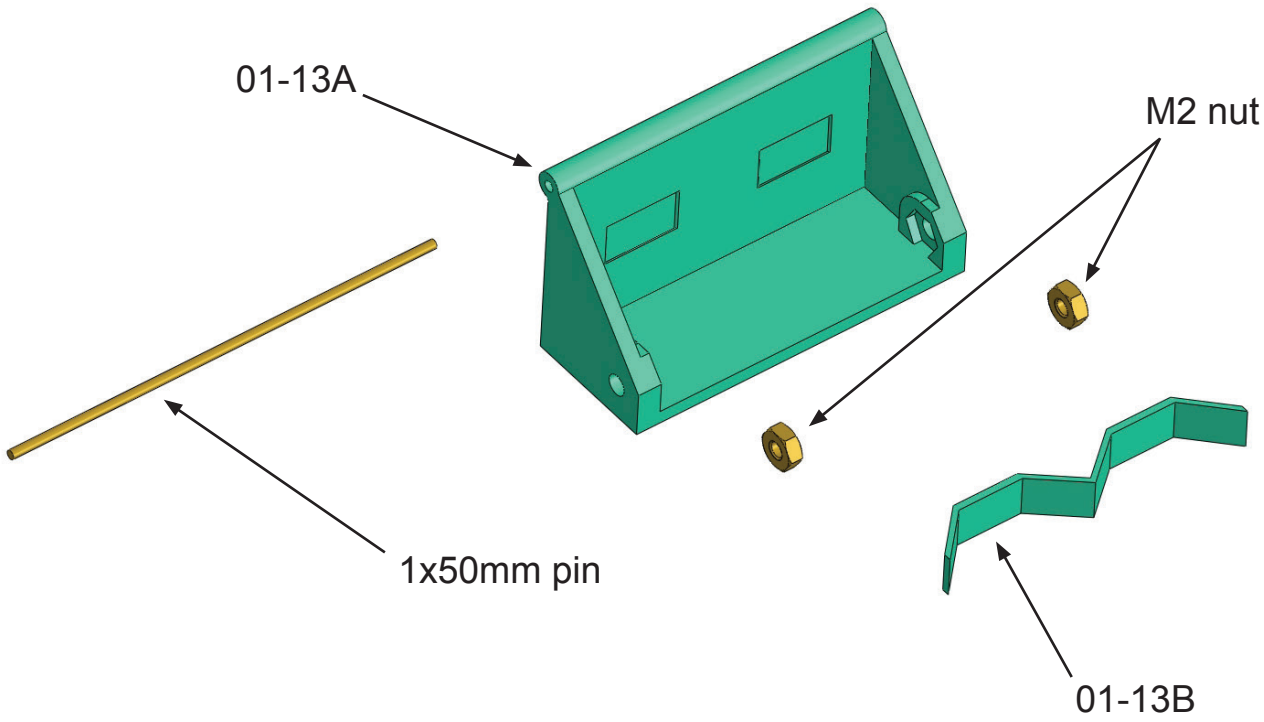

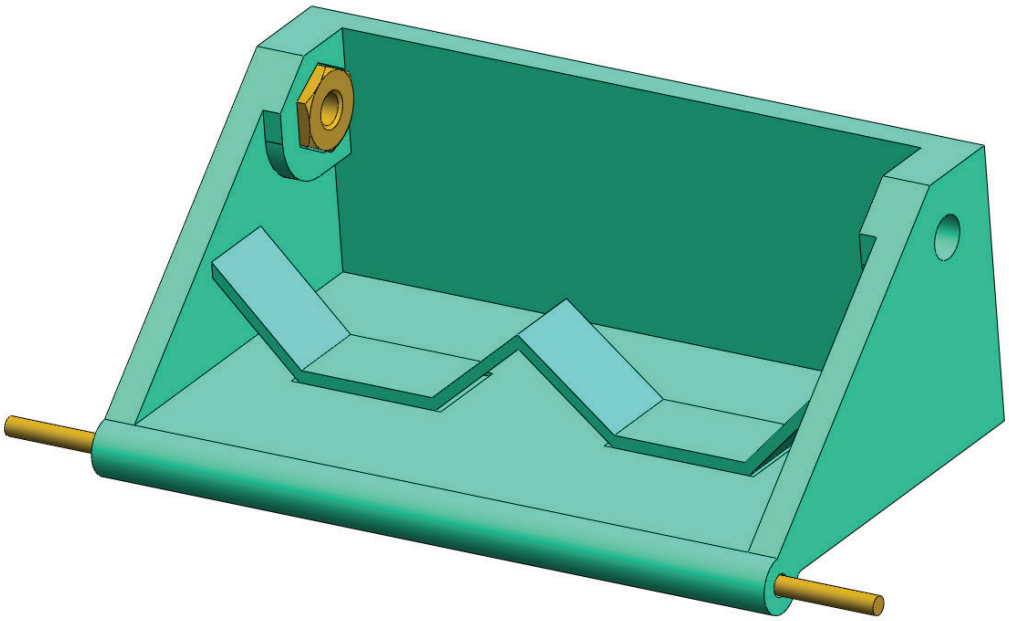

Insert two M2 nuts and a 1mm diameter, 50mm long pin (wire) into part 01-13A.
Glue part 01-13B to part 01-13A.

Assembly 01 - Lower Hull

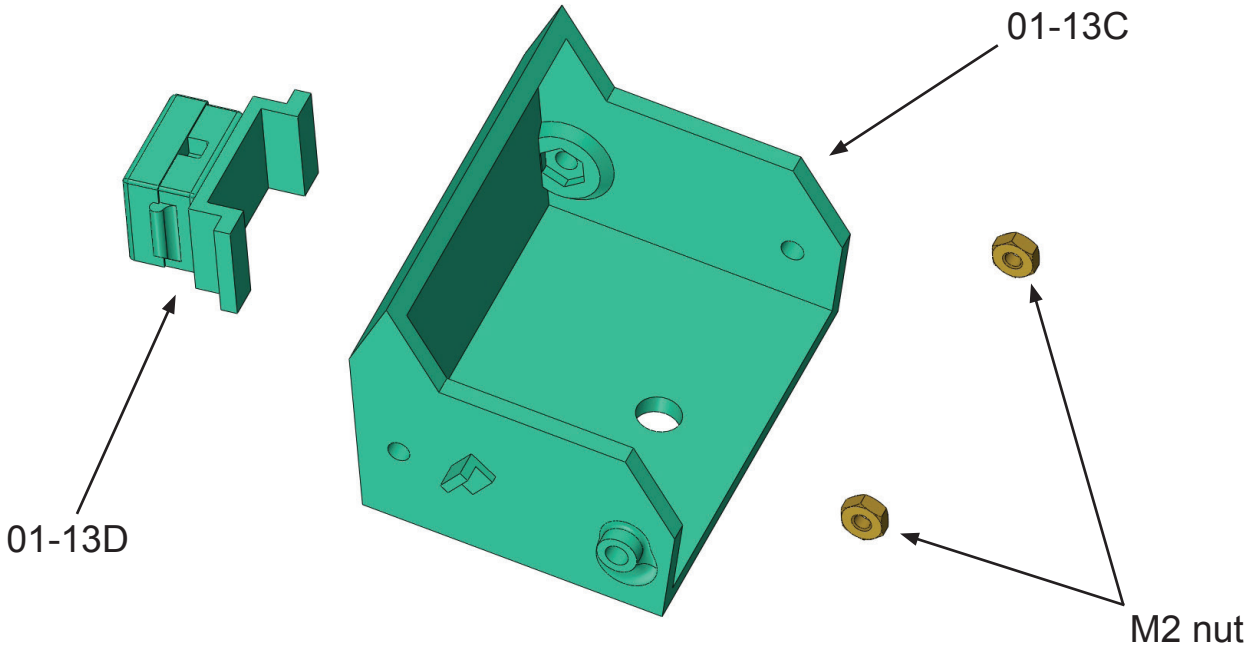

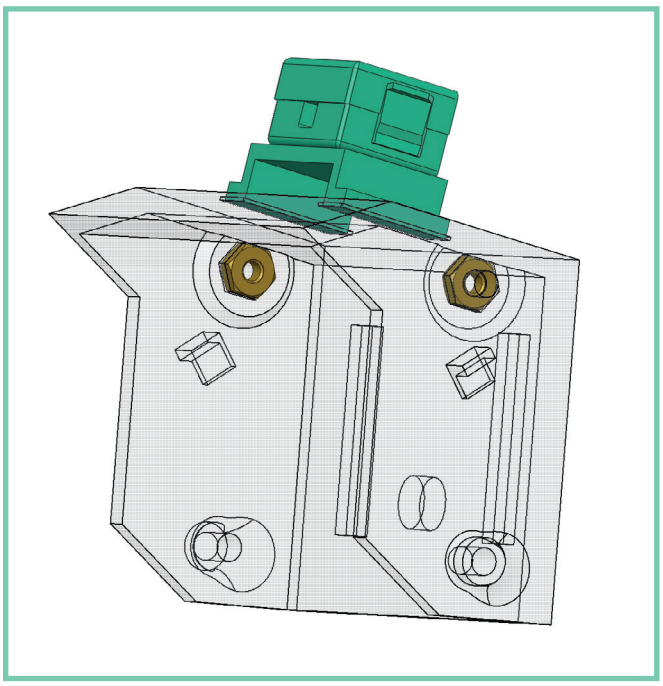

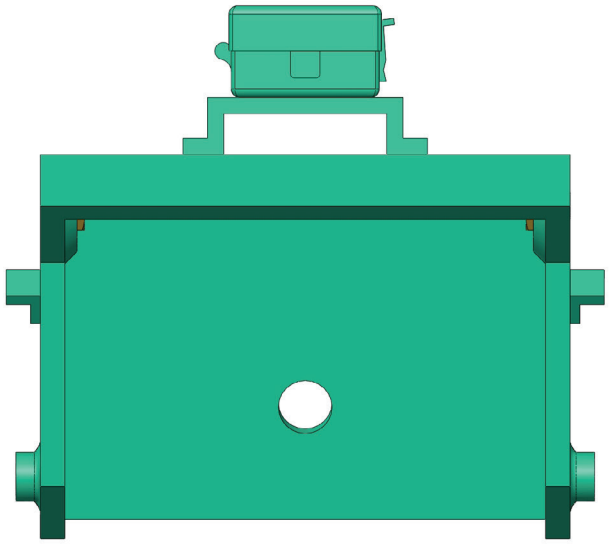

Insert two M2 nuts into part 01-13C.
Glue part 01-13D to part 01-13C.

Assembly 01 - Lower Hull

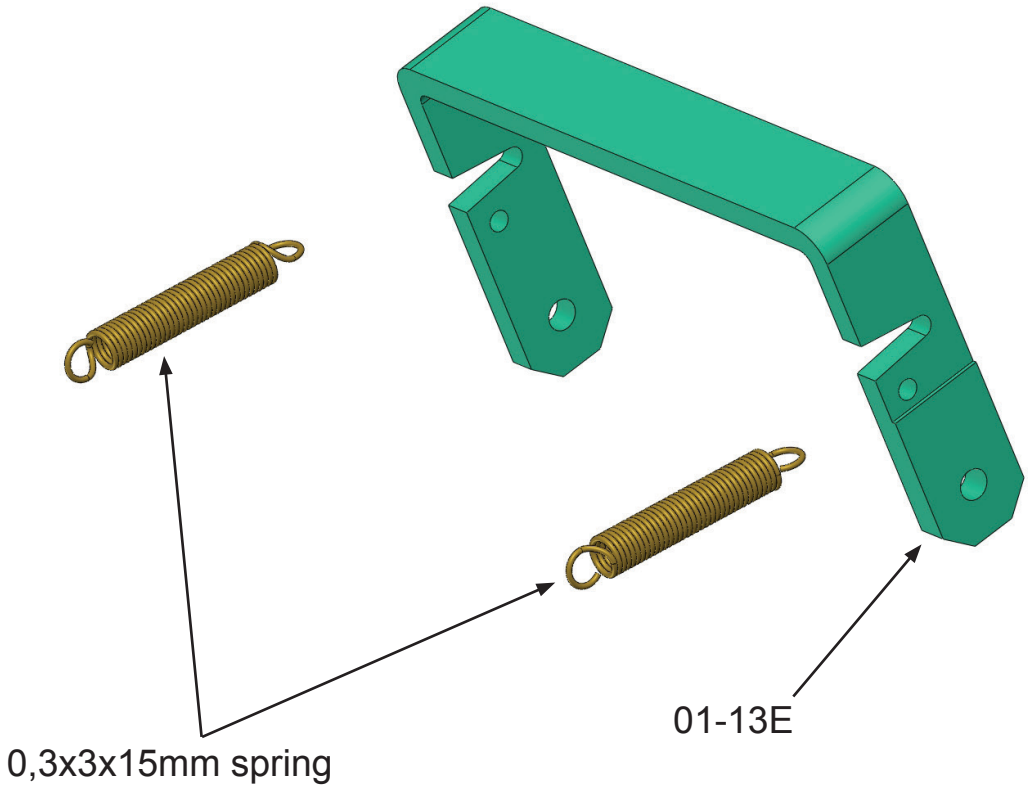

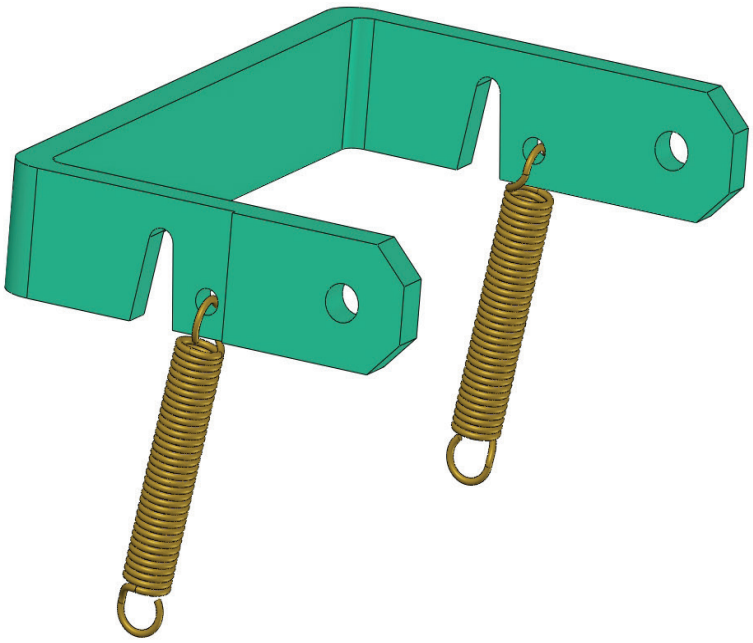

Insert two springs (0,3x3x15mm) into part 01-13E.

Assembly 01 - Lower Hull

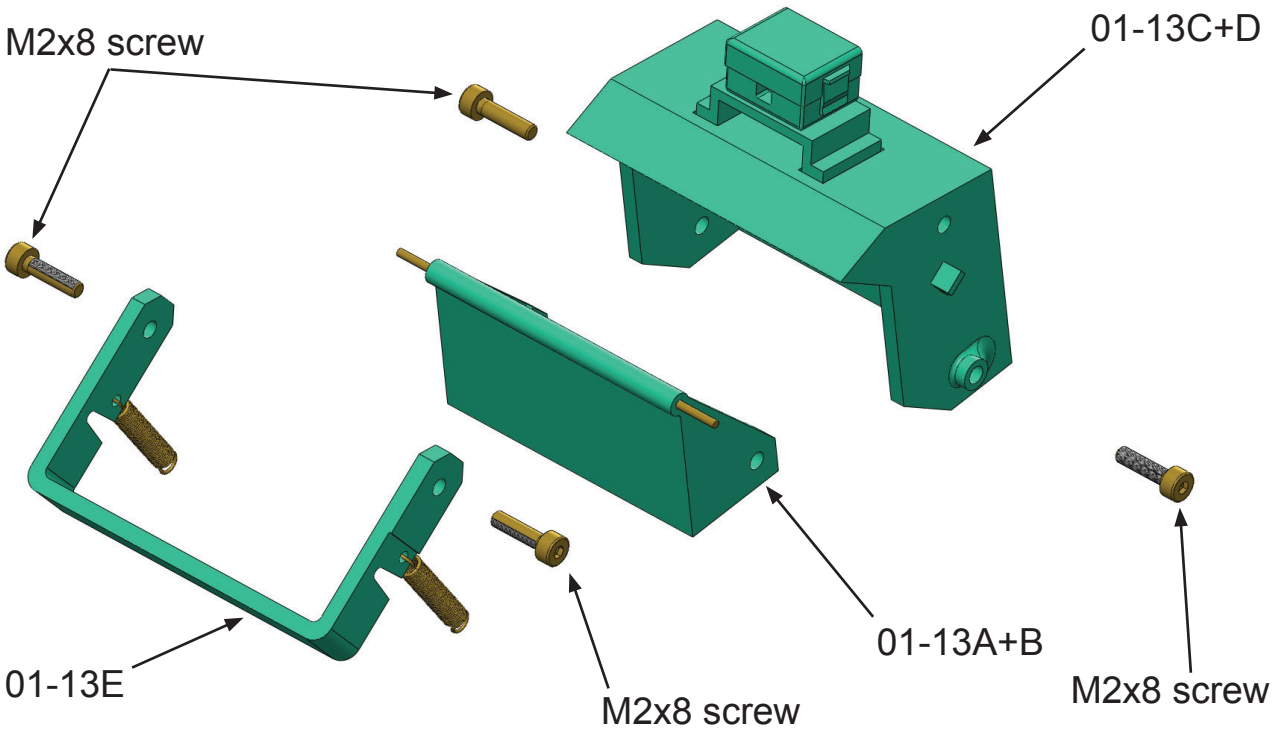

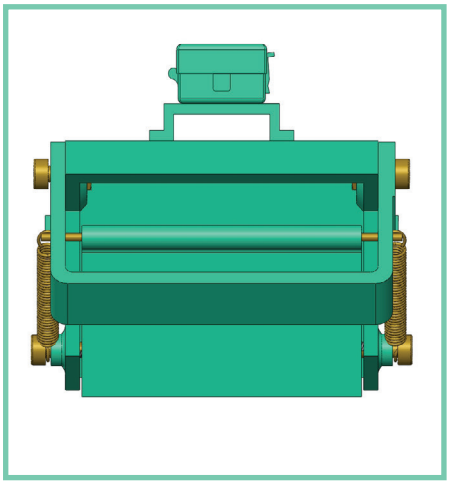

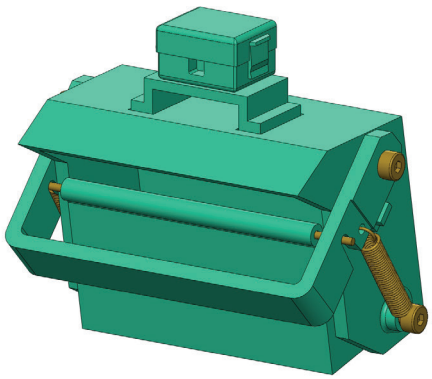

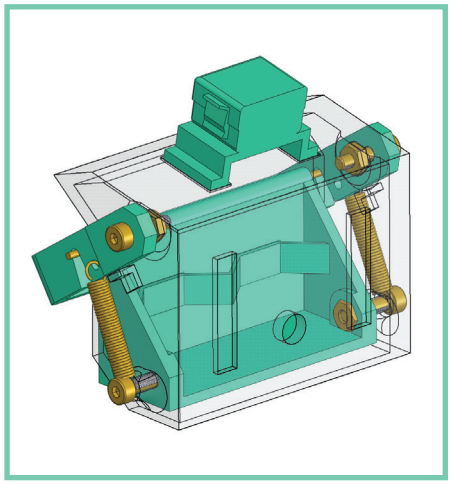

Connect the assemblies of parts 01-13A+B, 01-13C+D and part 01-13E using four M2x8 screws.
Insert the free side of the springs under the M2x8 screw head.

Assembly 01 - Lower Hull

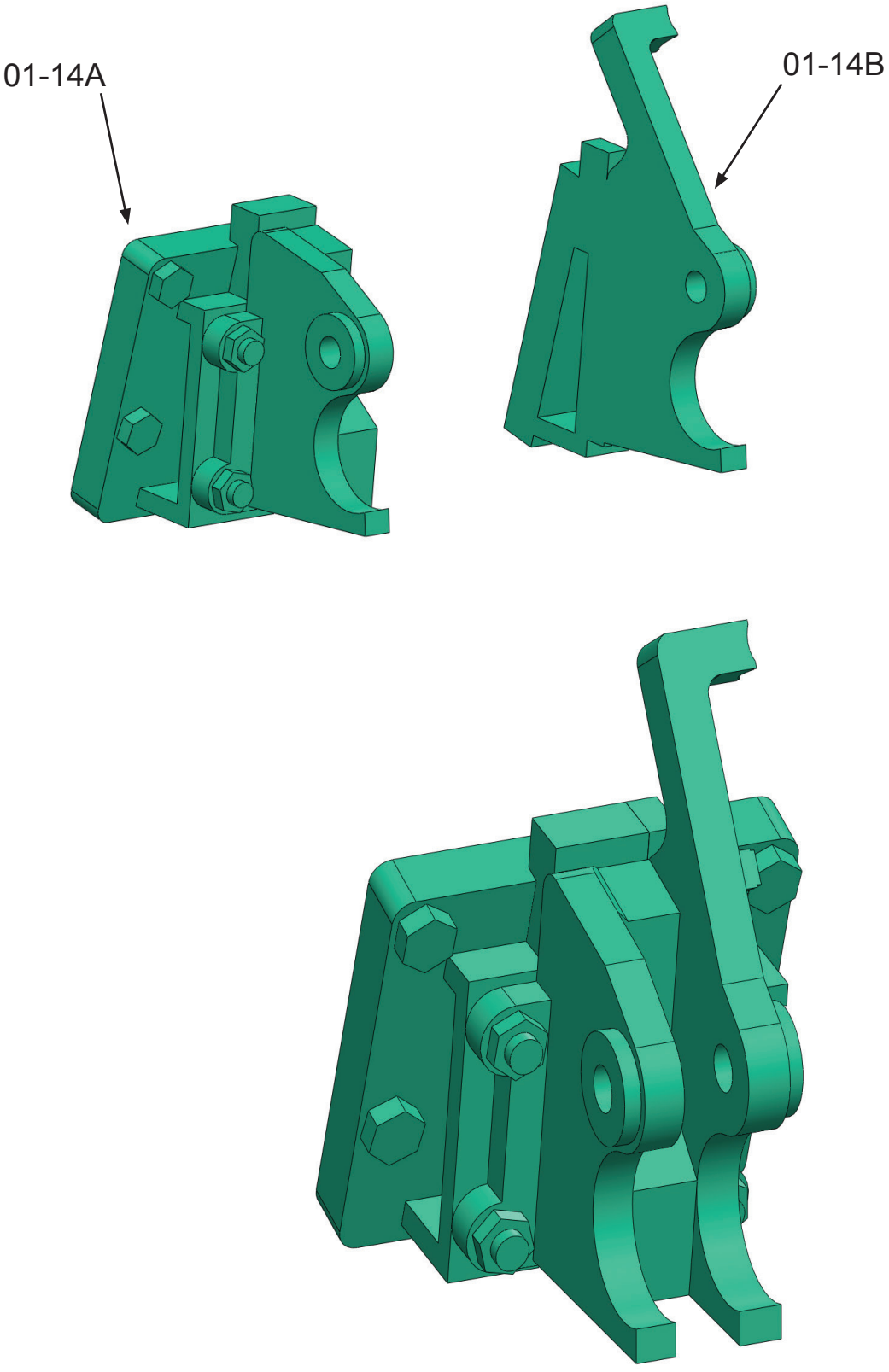

Glue parts 01-14A and 01-14B.

Assembly 01 - Lower Hull

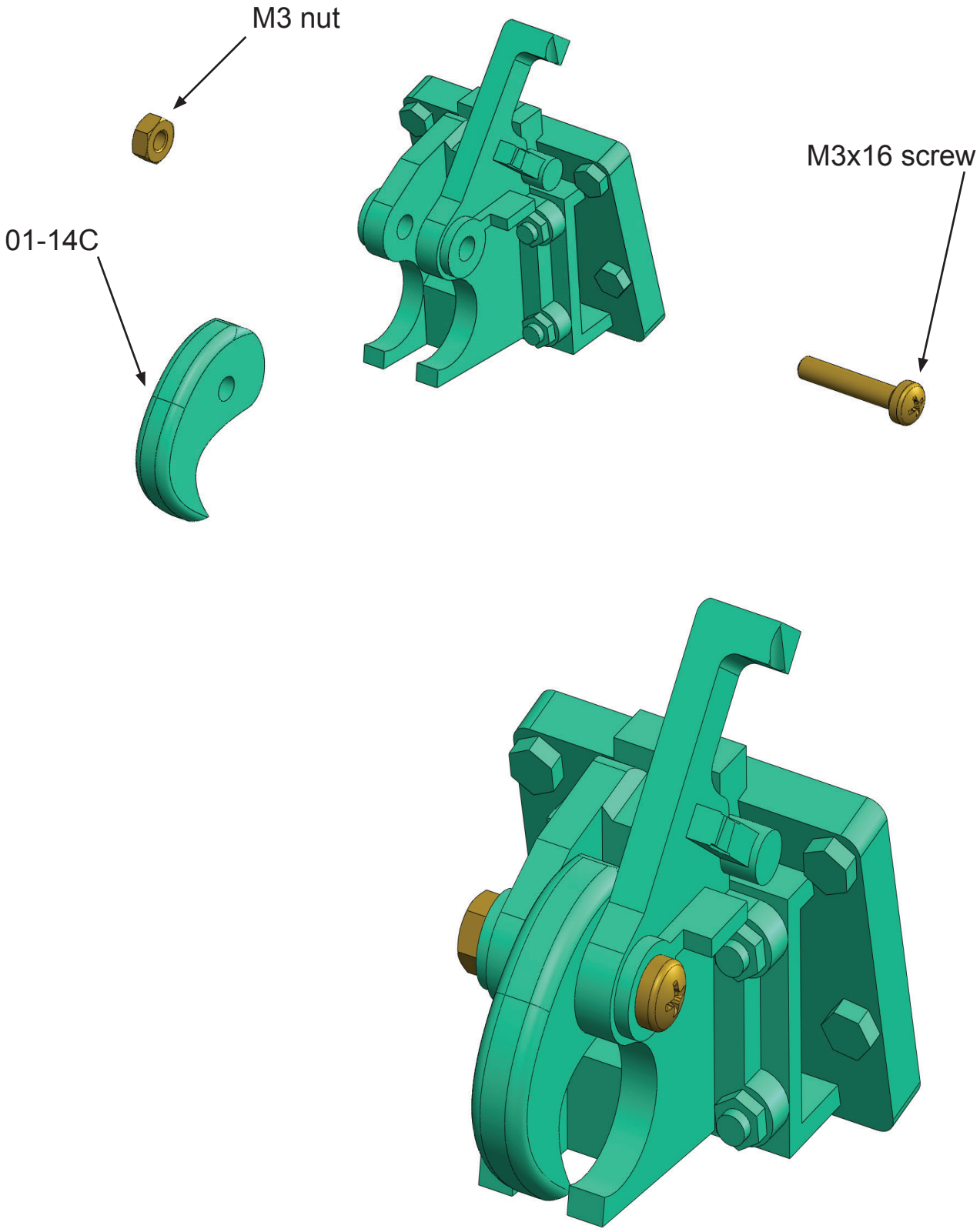

Connect part 01-14C using M3x16 screw and M3 nut.

Assembly 01 - Lower Hull

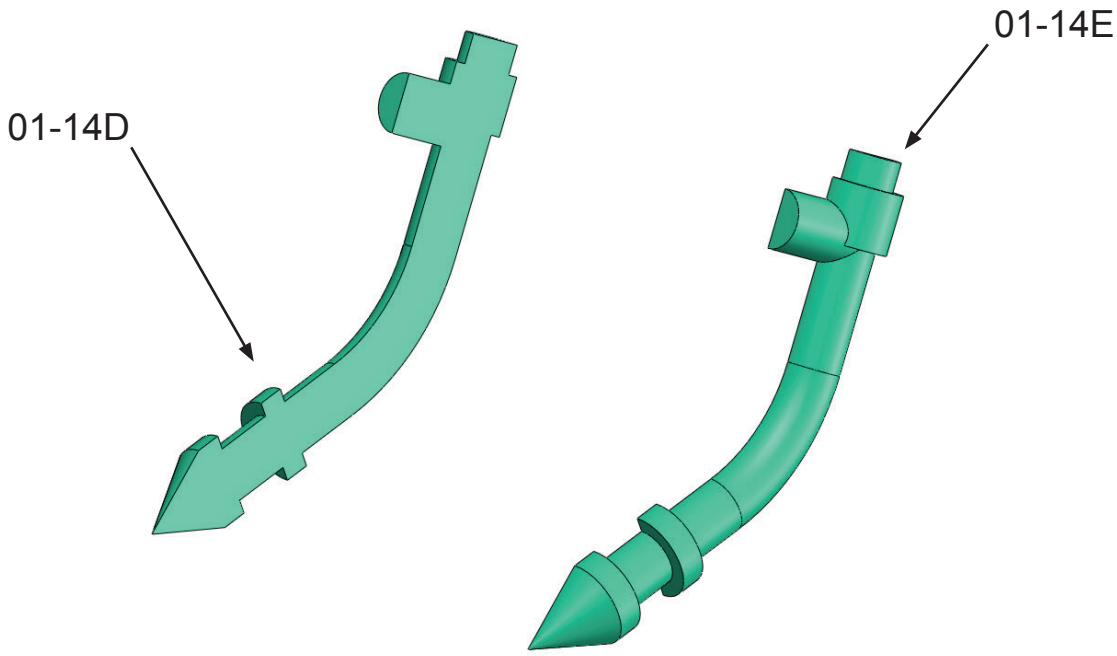

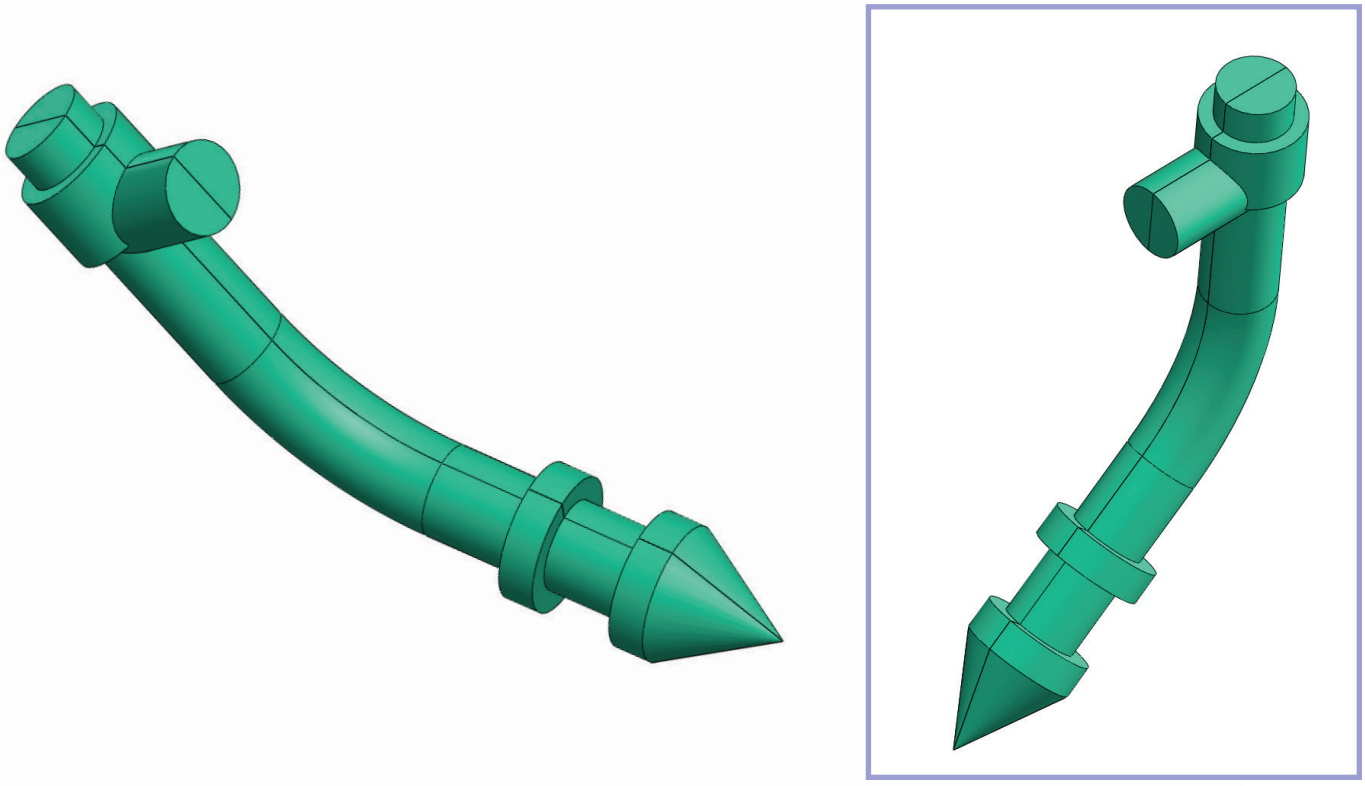

Glue parts 01-14D and 14-14E.
Skip this step if you are using part 01-14DE.

Assembly 01 - Lower Hull

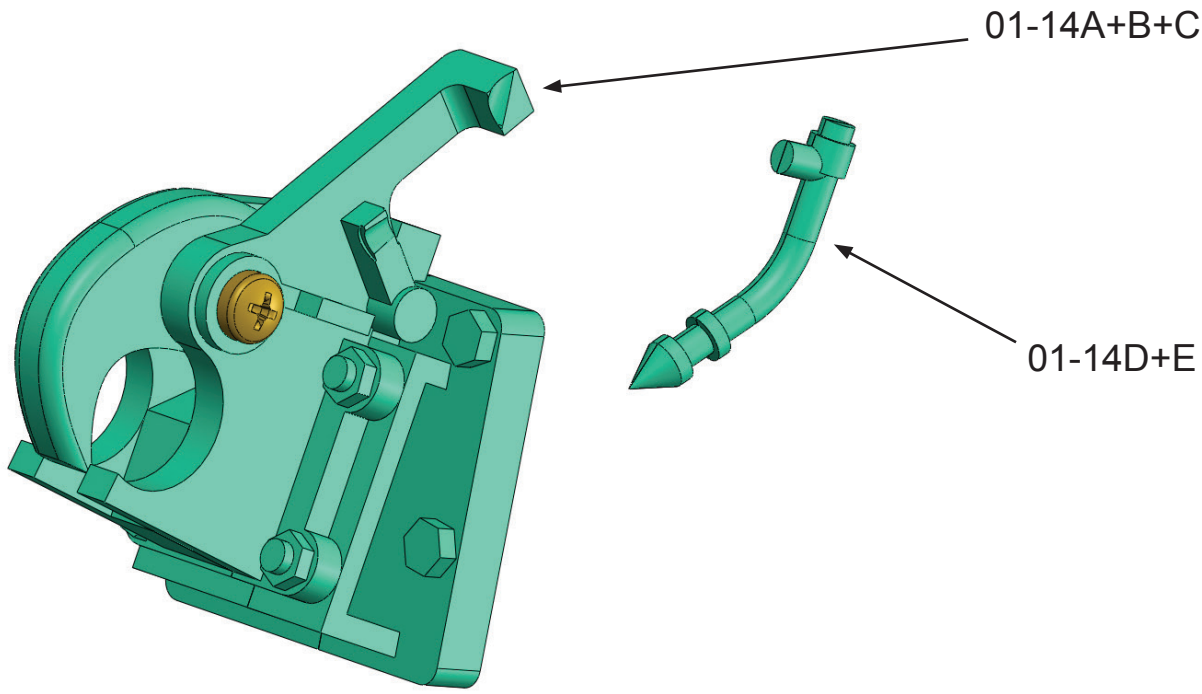

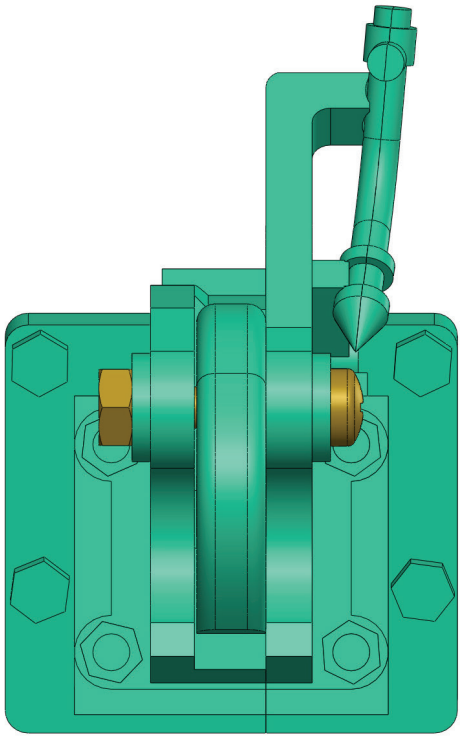

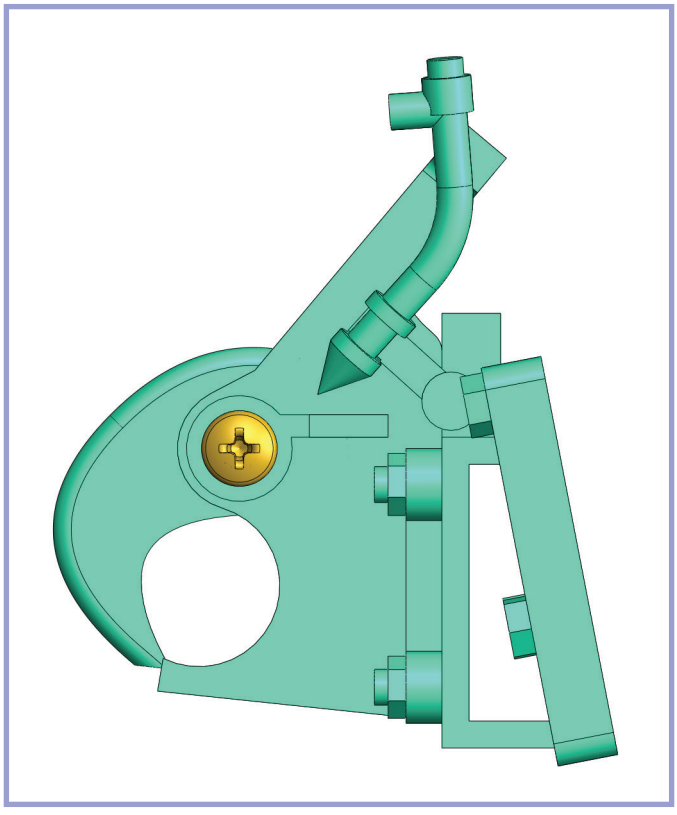

Glue the assemblies of parts 01-14A+B+C and 01-14D+E together.

Assembly 01 - Lower Hull

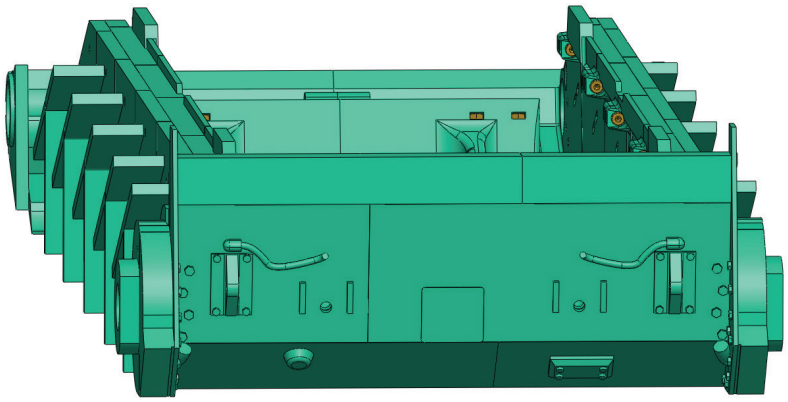

01-12A+B+C+D+E

01-13A+B+C+D+E

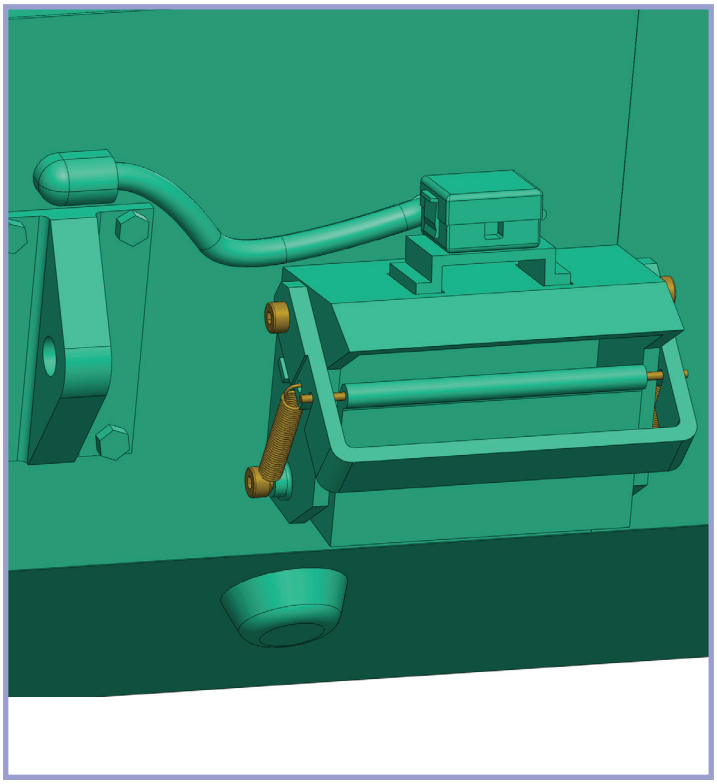

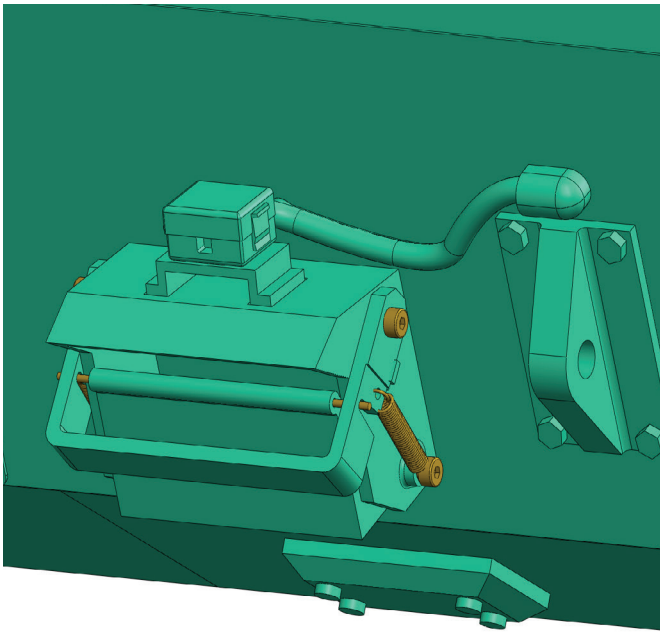

Glue the assemblies of parts 01-12A+B+C+D+E and 01-13A+B+C+D+E.

Assembly 01 - Lower Hull

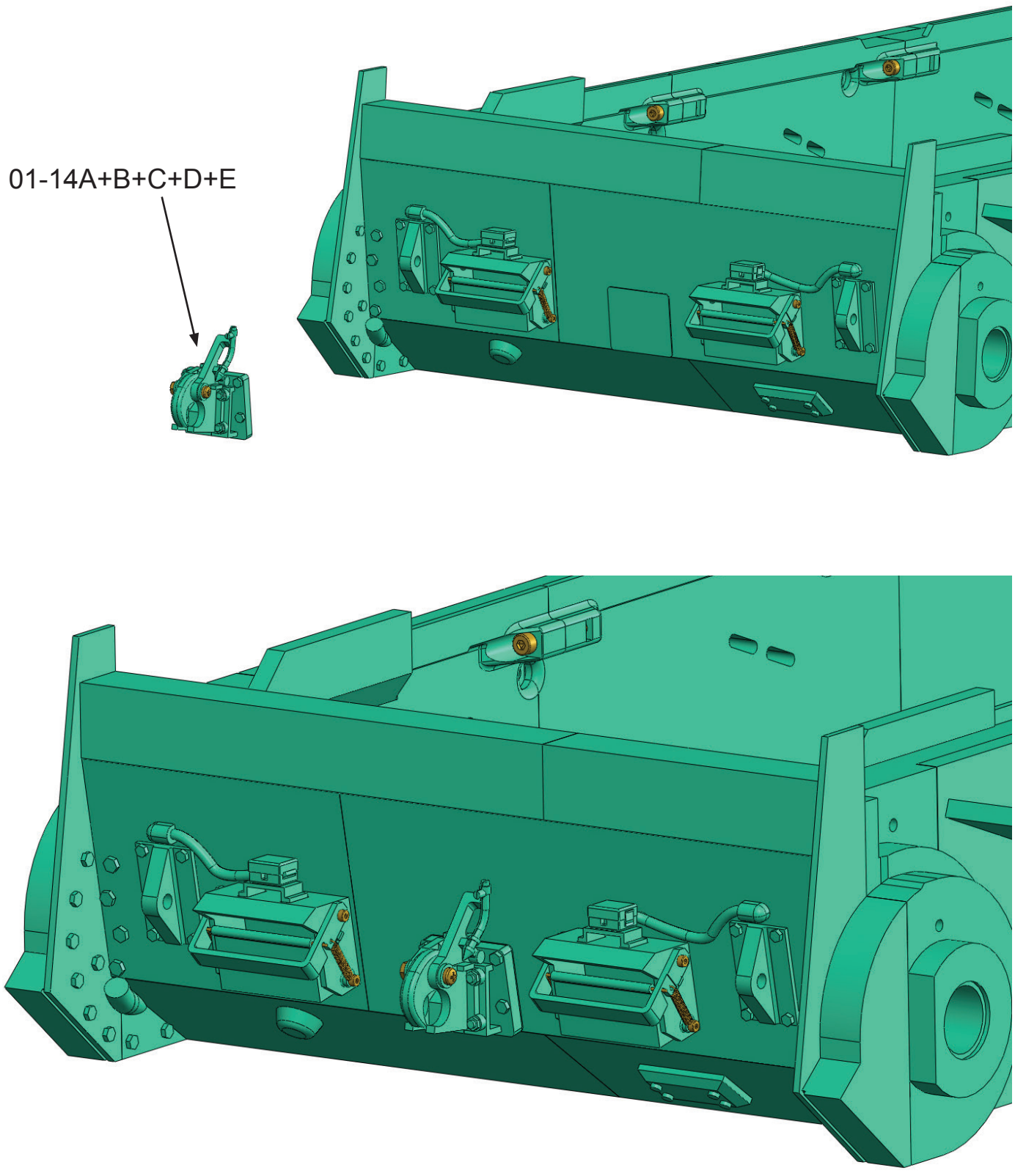

Glue the assembly of parts 01-14A+B+C+D+E.

Assembly 01 - Lower Hull

2x

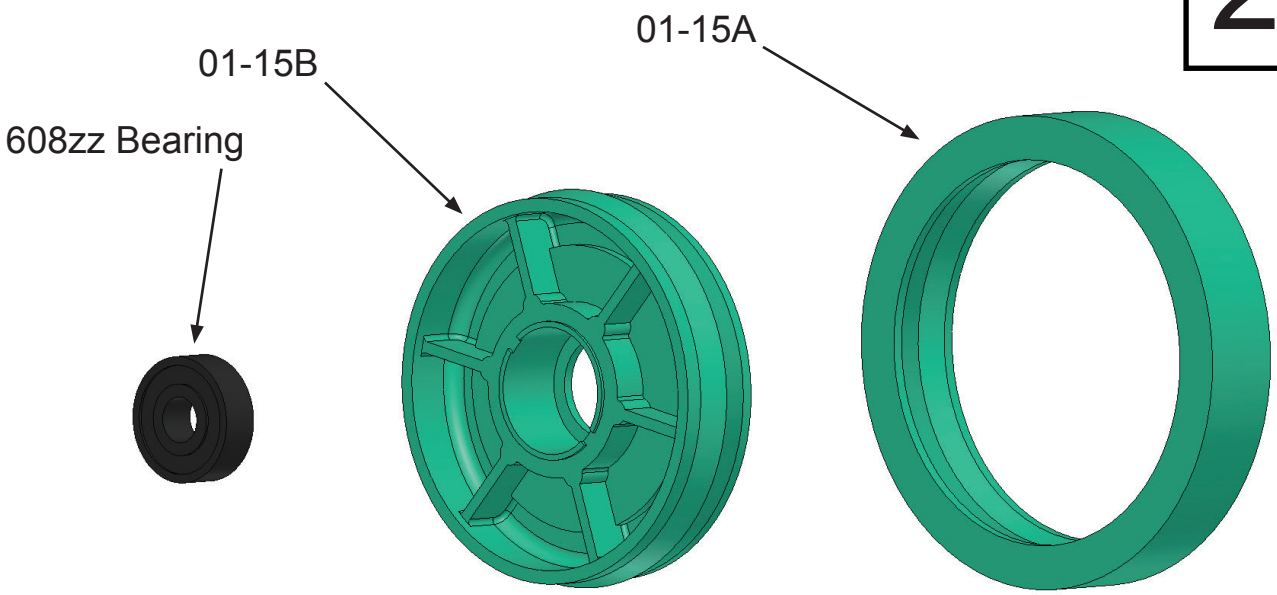

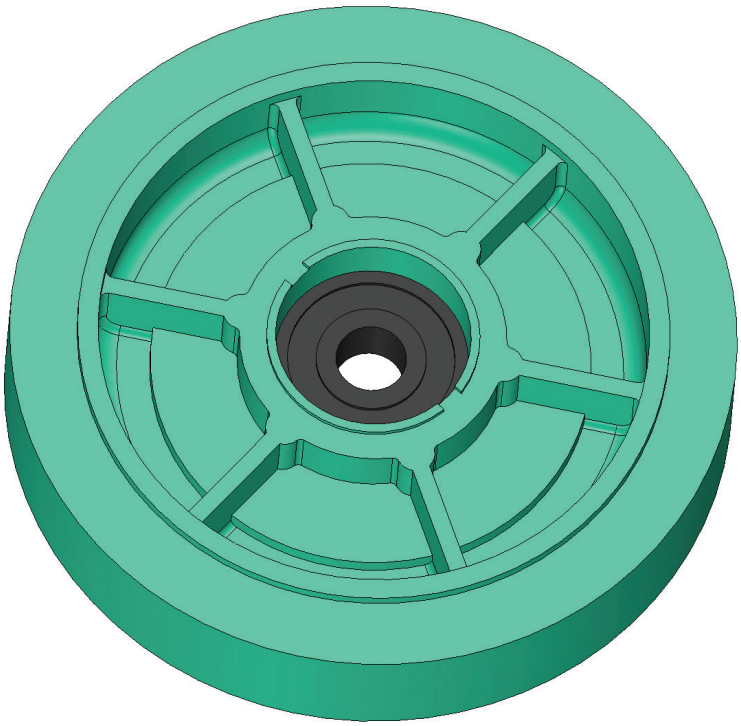

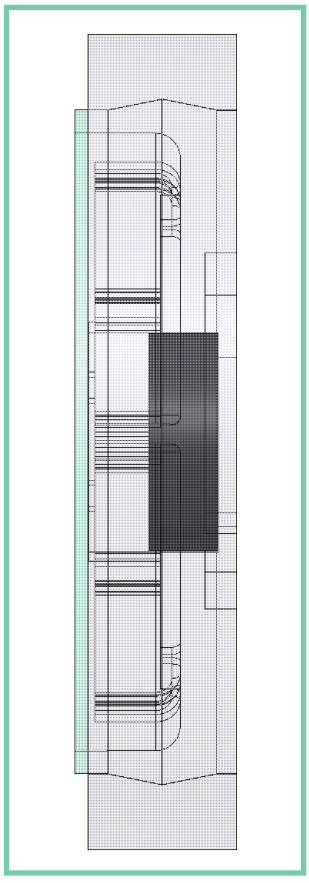

Insert the 608zz bearing into part 01-15B.
Install part 01-15A. Glue if necessary.
You can use alternative part 01-15AB (no rubber).

Assembly 01 - Lower Hull

2x



608zz Bearing

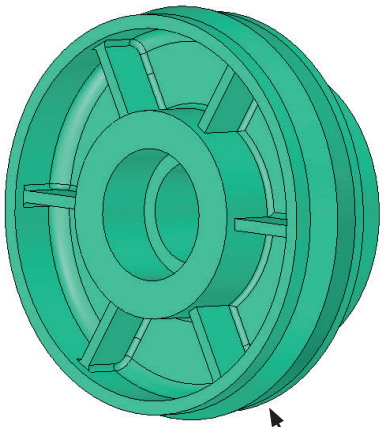

01-15C

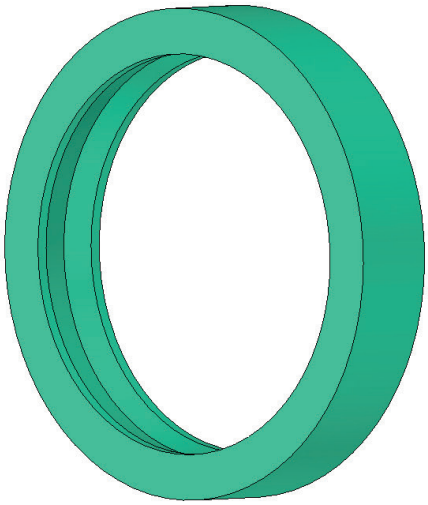

01-15A

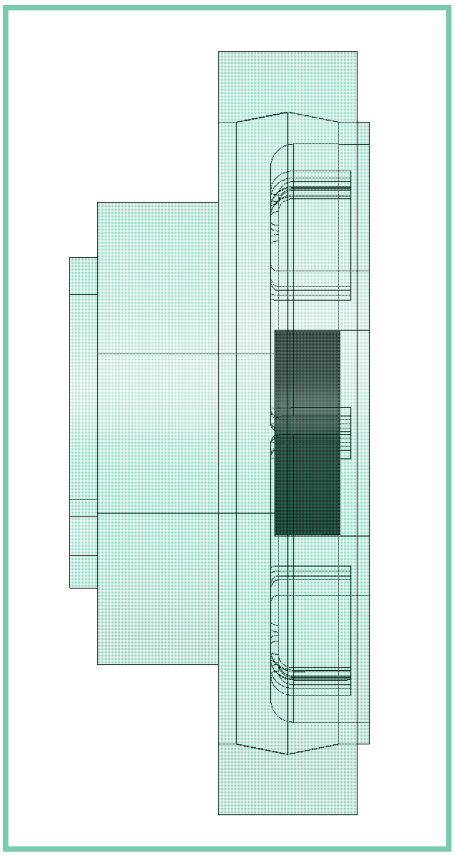

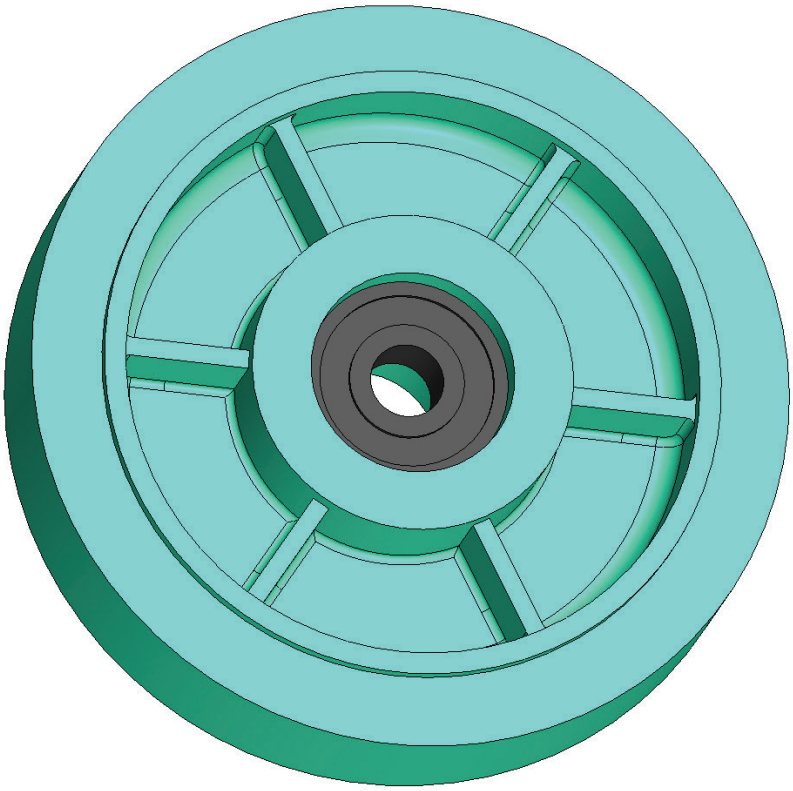

Insert the 608zz bearing into part 01-15C.
Install part 01-15A. Glue if necessary.
You can use alternative part 01-15AC.

Assembly 01 - Lower Hull

2x

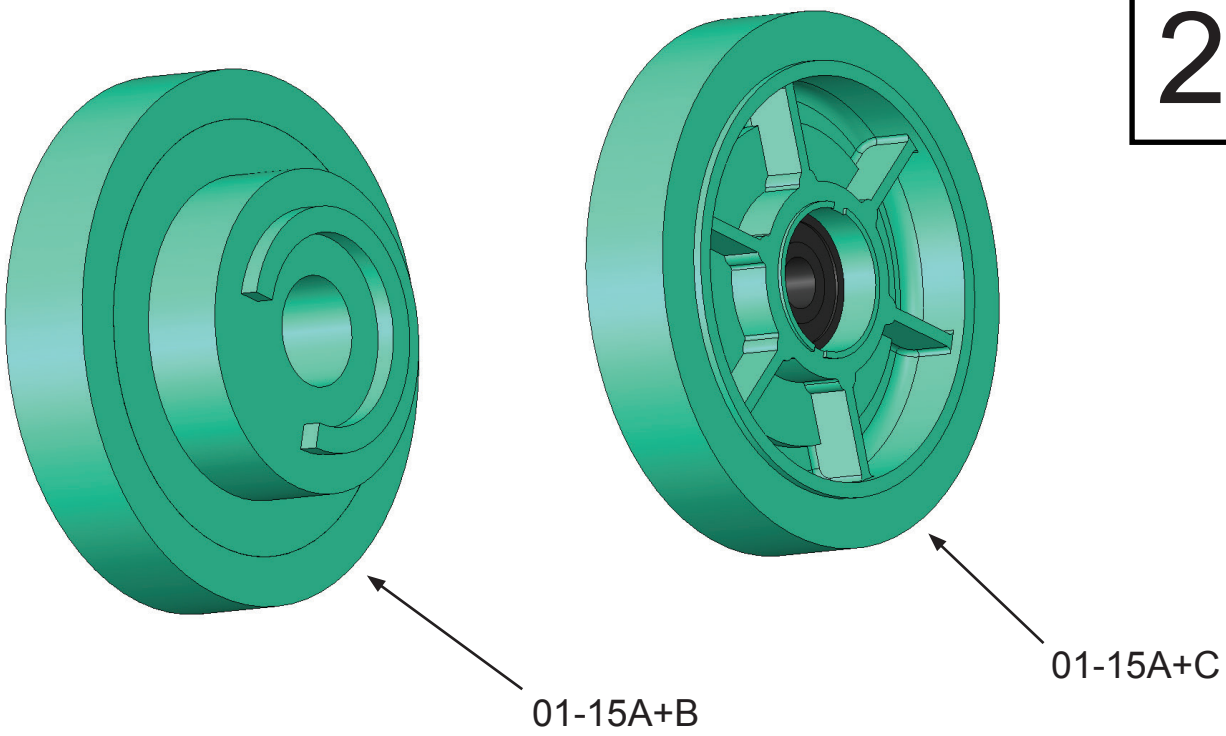

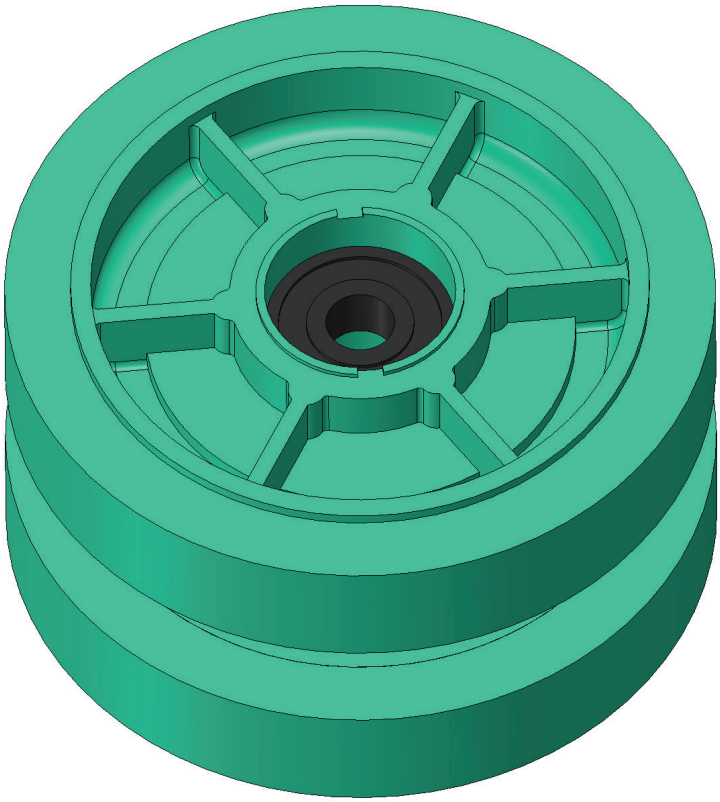

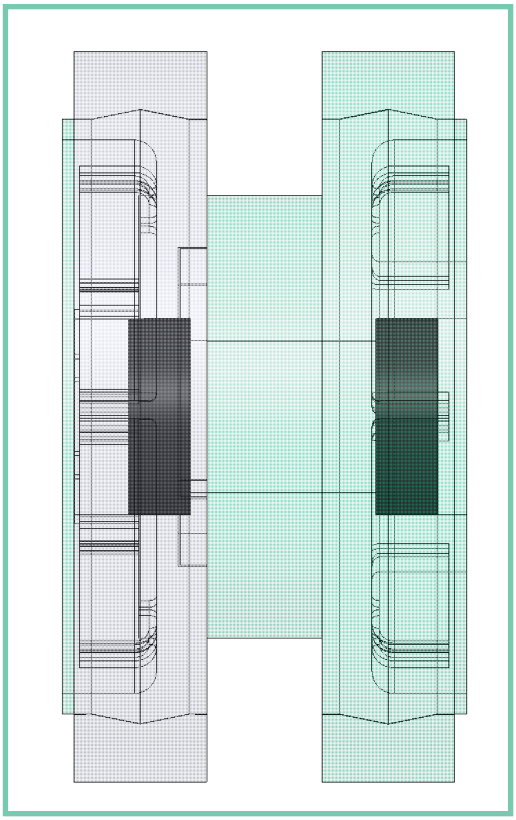

Glue the assemblies of parts 01-15A + B and 01-15A + C.

Assembly 01 - Lower Hull

2x

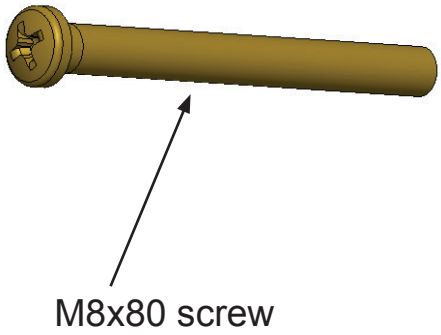

M8x80 screw

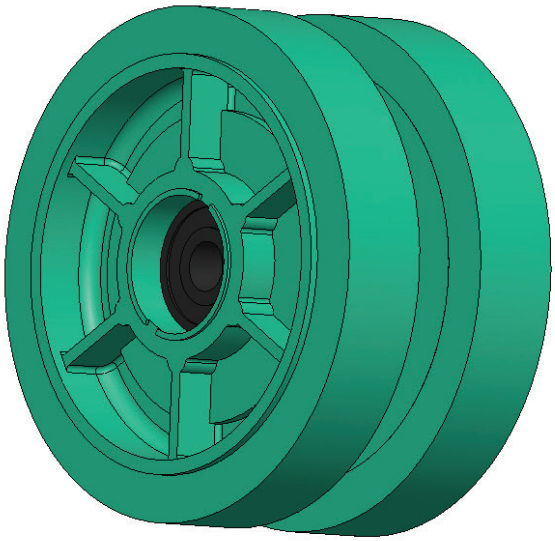



M8 nut

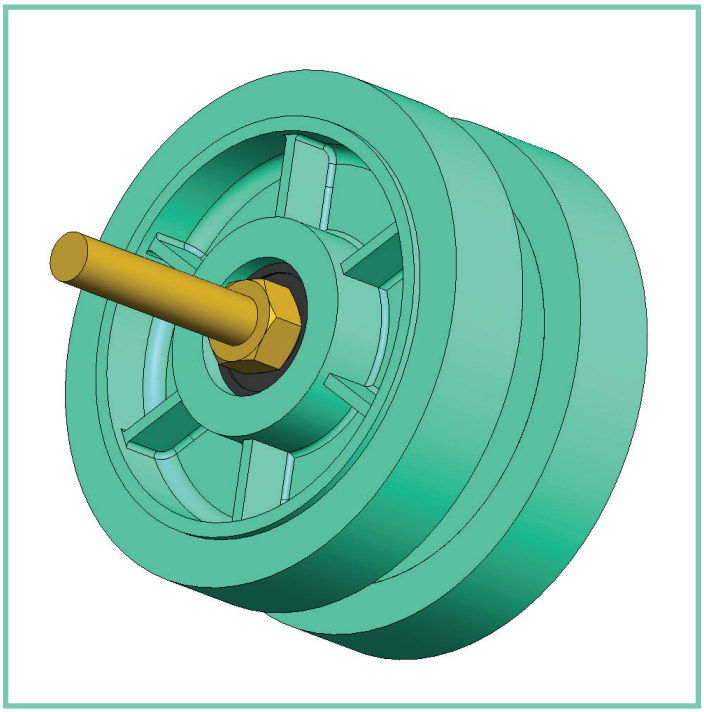

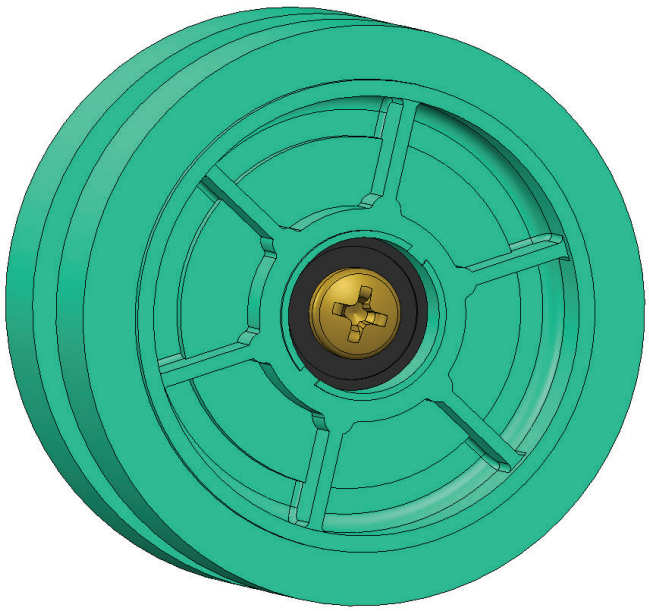

Insert the M8x80mm screw. Secure with M8 nut.
Fix the nut with the superglue.

Assembly 01 - Lower Hull

2x

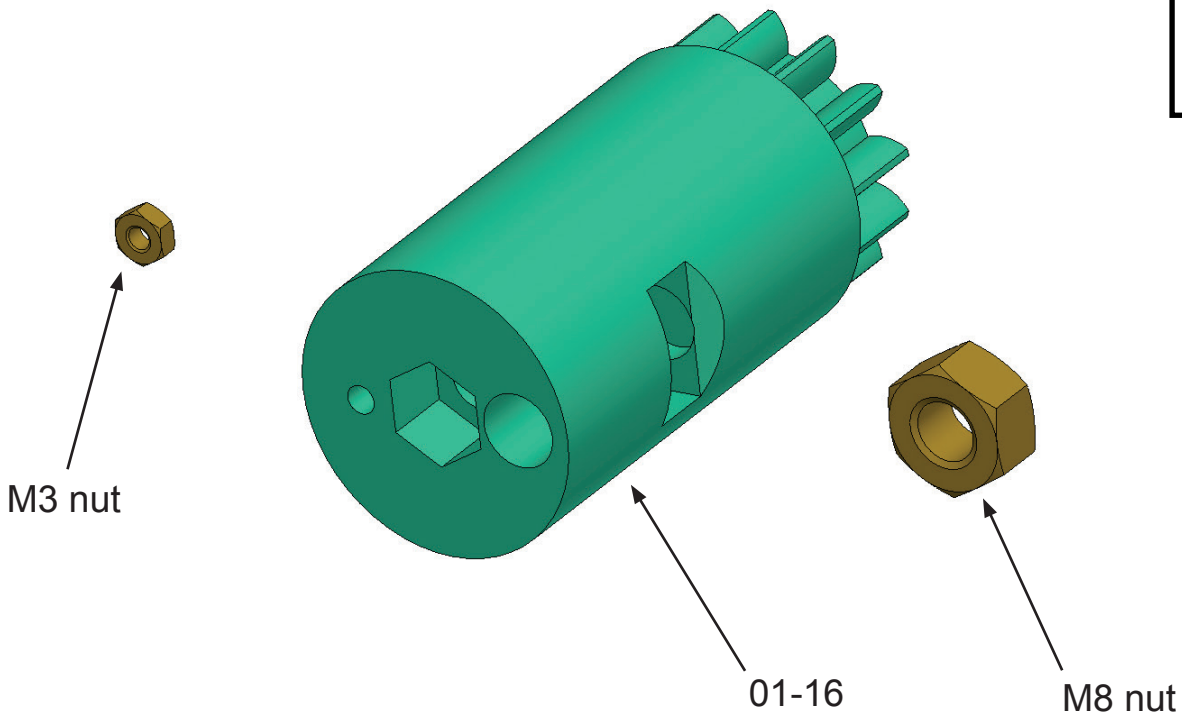

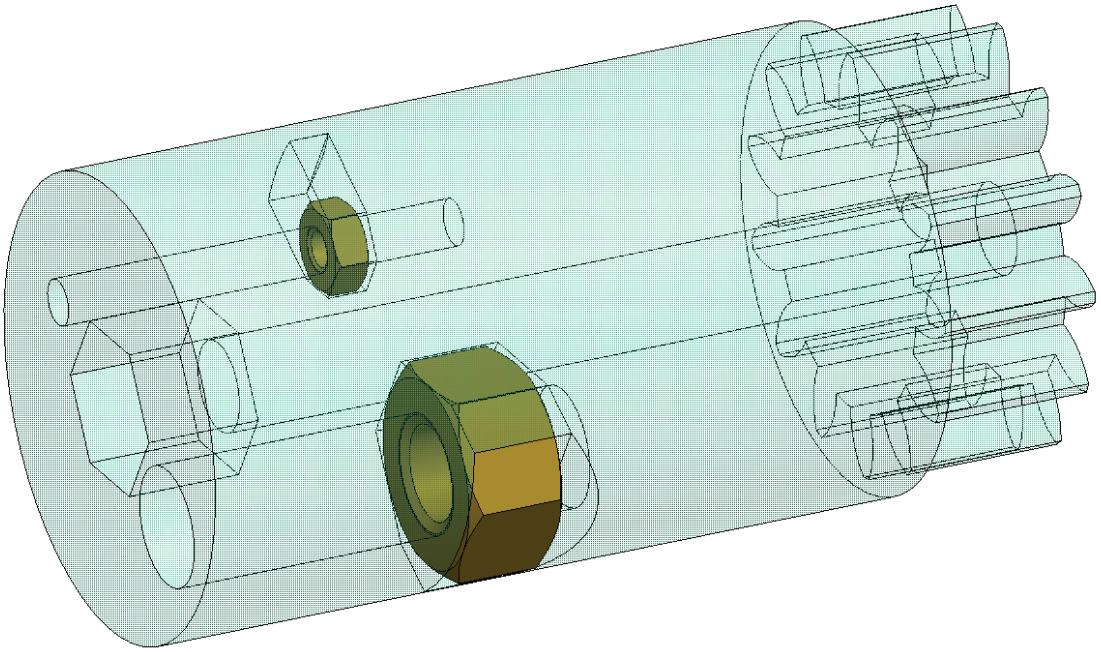

Insert M3 nut and M8 nut into part 01-16.

Assembly 01 - Lower Hull

2x

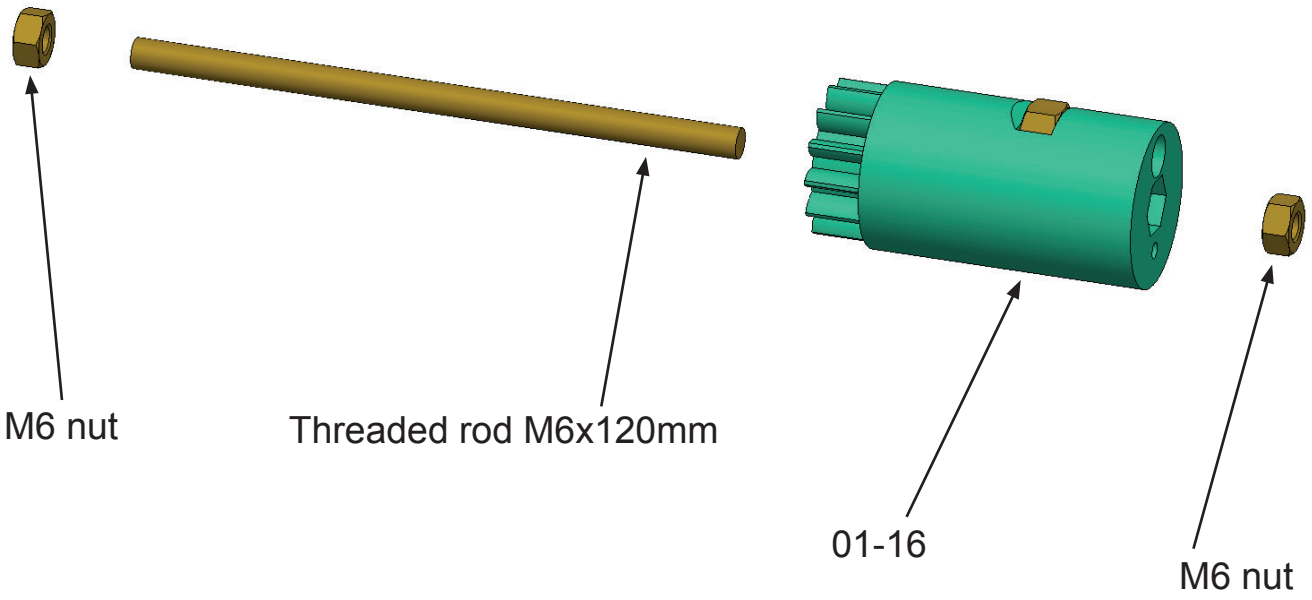

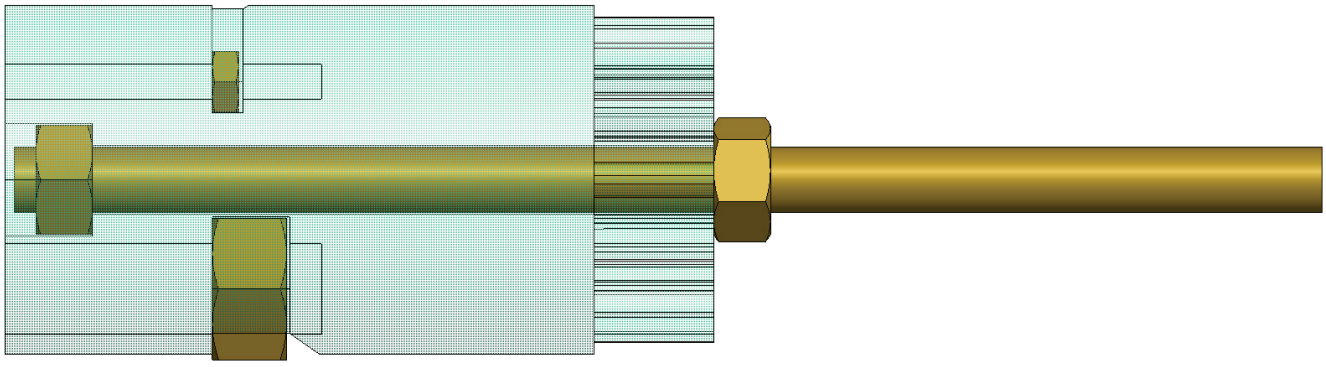

Insert Threaded rod M6x120mm. Secure with two M6 nuts.
Fix the nuts with the superglue.

Assembly 01 - Lower Hull

2x

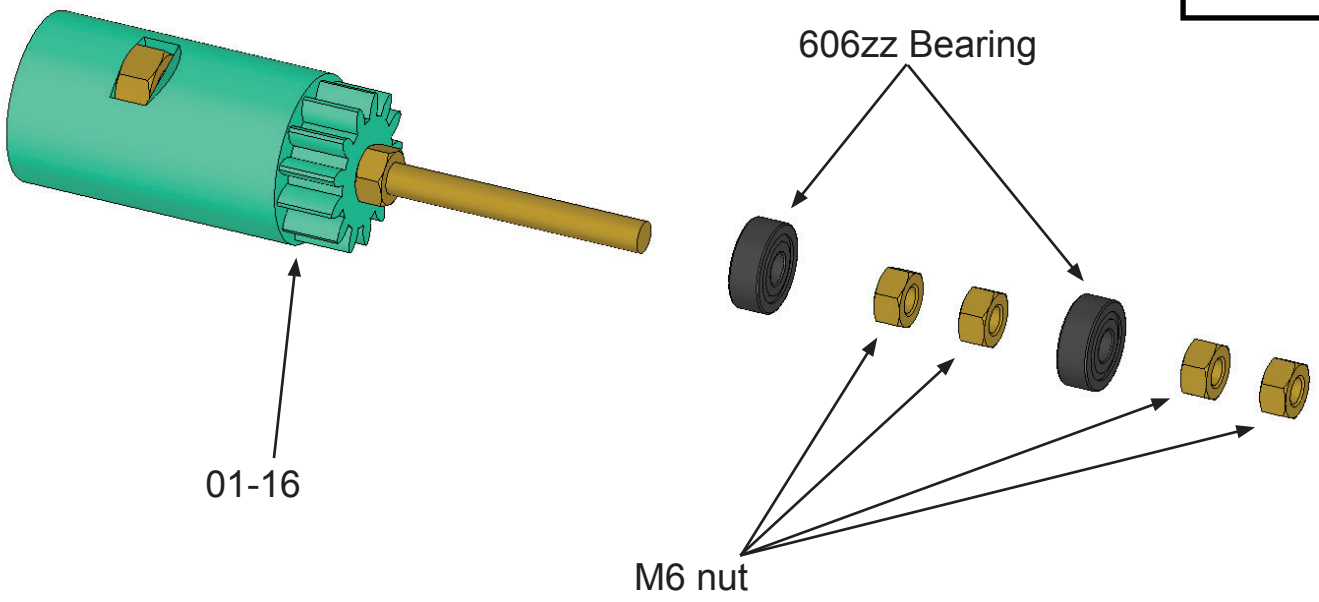

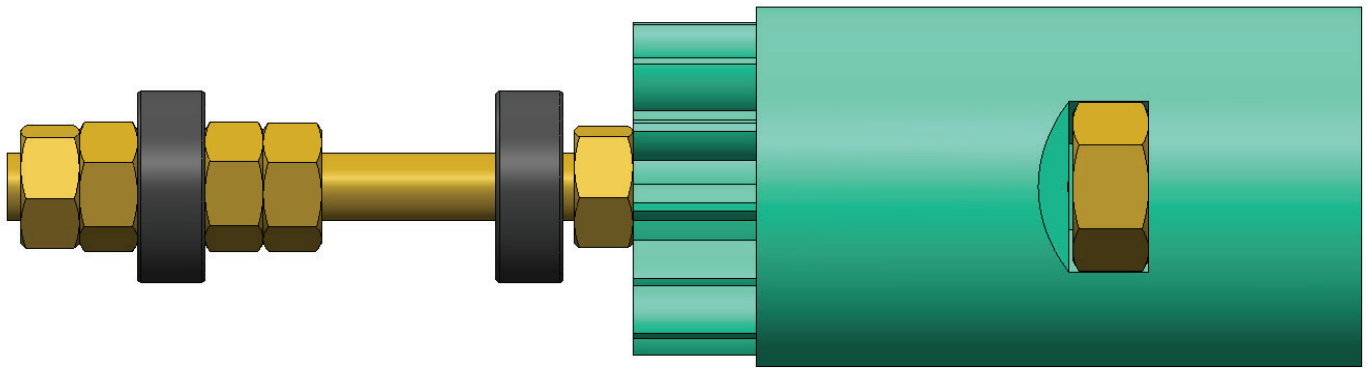

Add two 606zz bearings and four M6 nuts to part 01-16.
Both nuts serve to secure one bearing.
The second bearing is mounted free.

Assembly 01 - Lower Hull

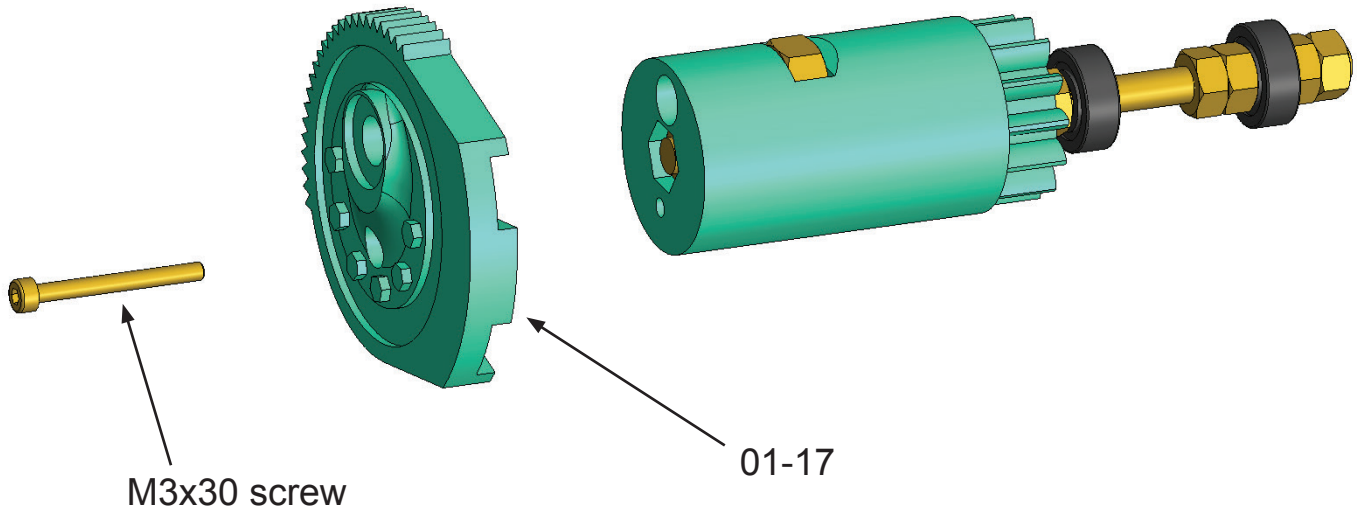

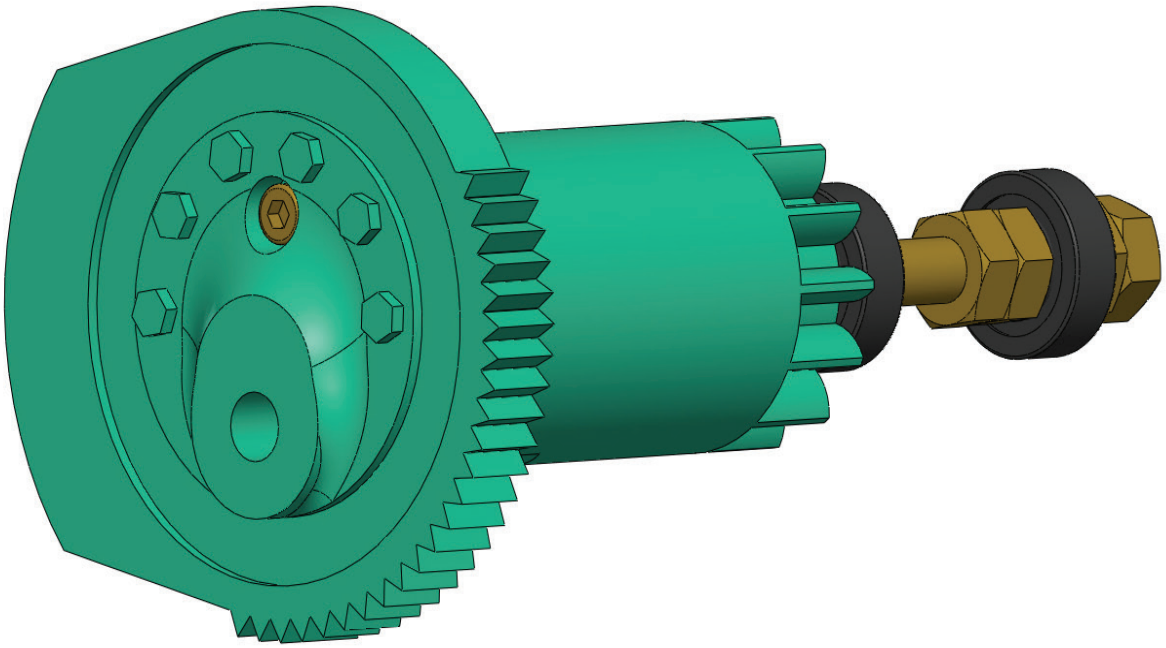

Attach part 01-17 to part 01-16. Use the M3x30mm screw.

Assembly 01 - Lower Hull

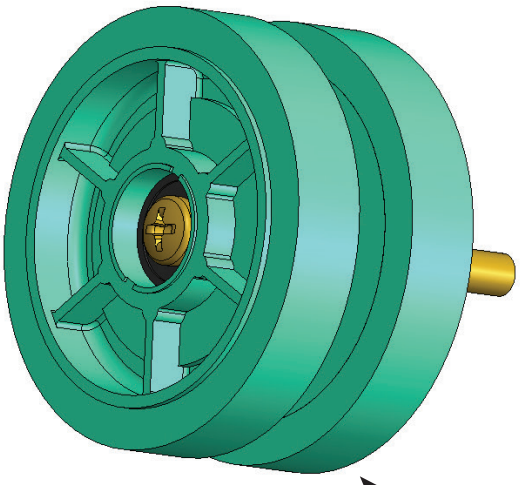

01-15A+B+C

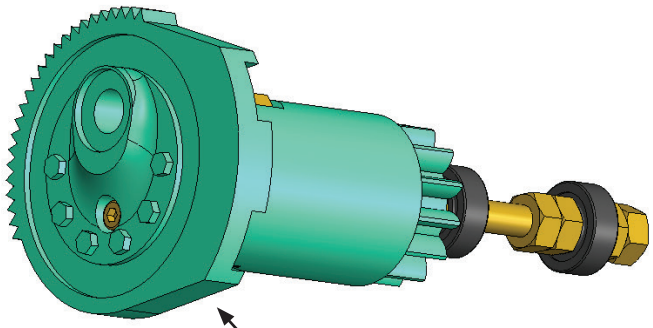

01-16 + 01-17

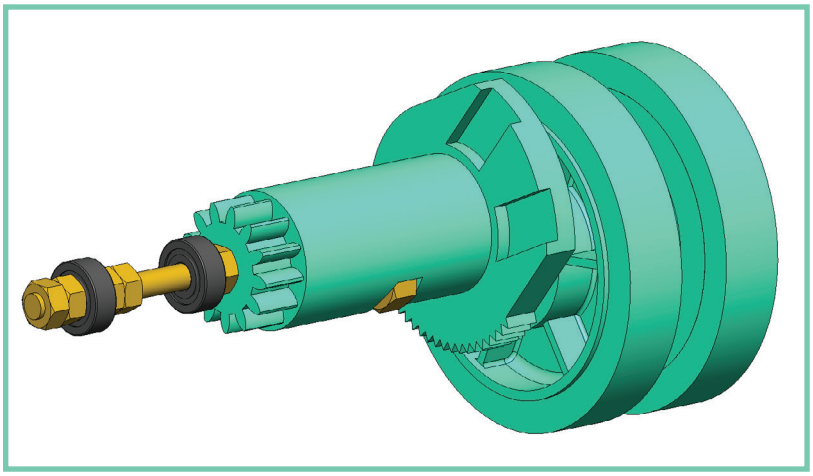

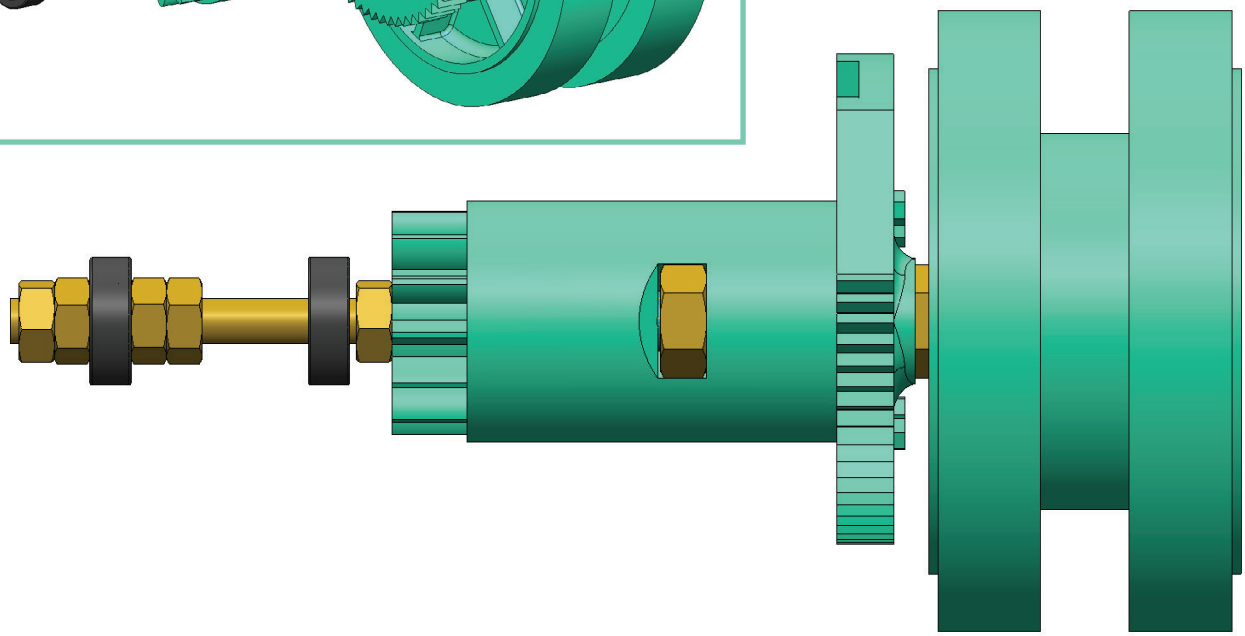

Attach the 01-15 part assembly to the 01-16 and 01-17 parts assembly.
Make sure the screw does not fall out.

Assembly 01 - Lower Hull

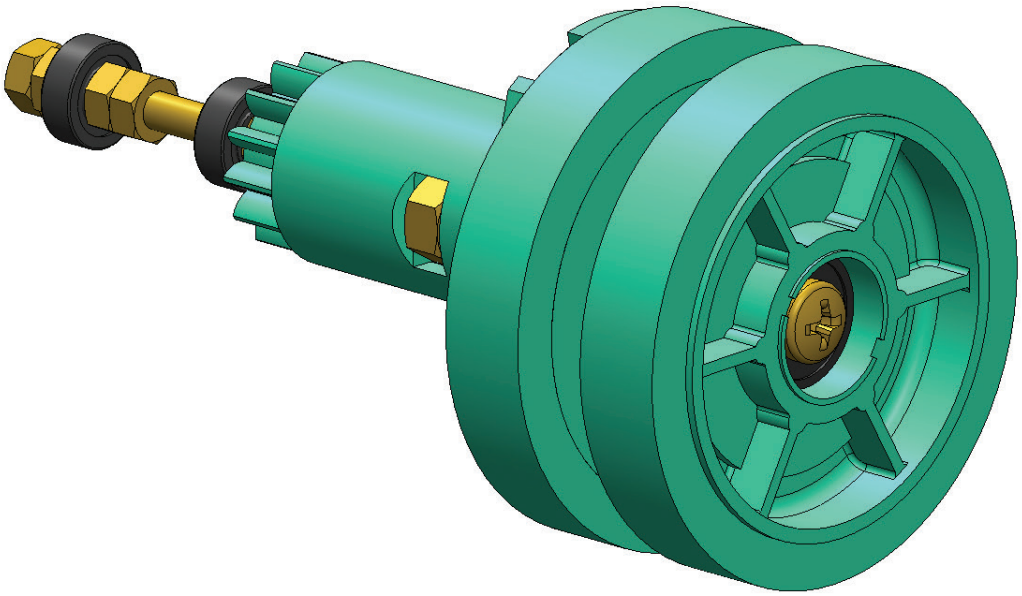

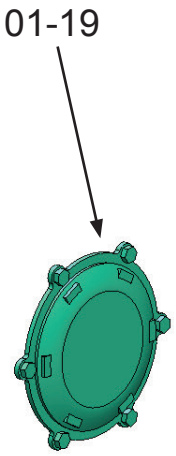

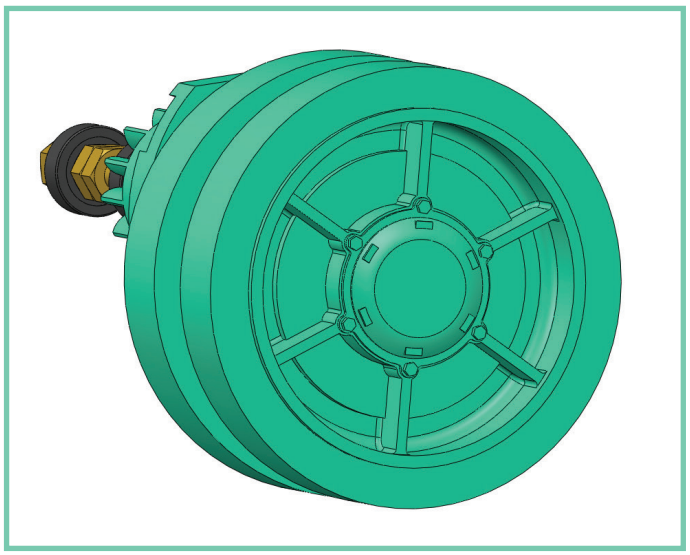

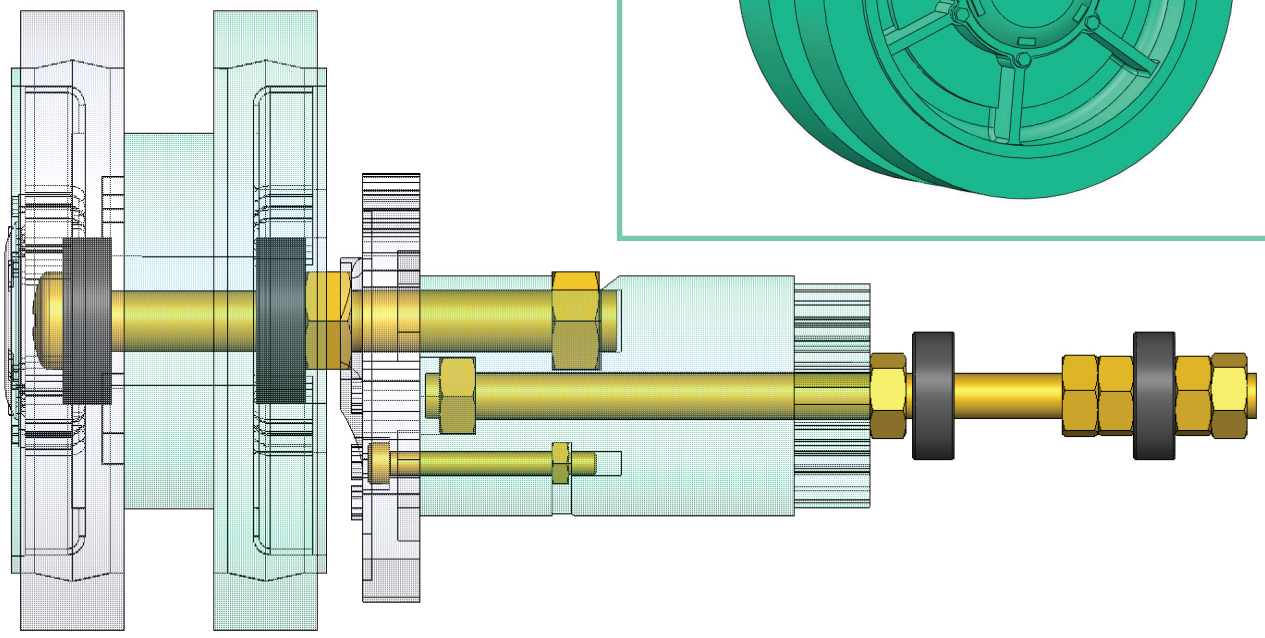

Check all parts again to make sure the screws won't fall out.
Glue part 01-19 to the assembly of parts 01-16 and 01-17.
We recommend using an adhesive that can be removed in the future.

Assembly 01 - Lower Hull

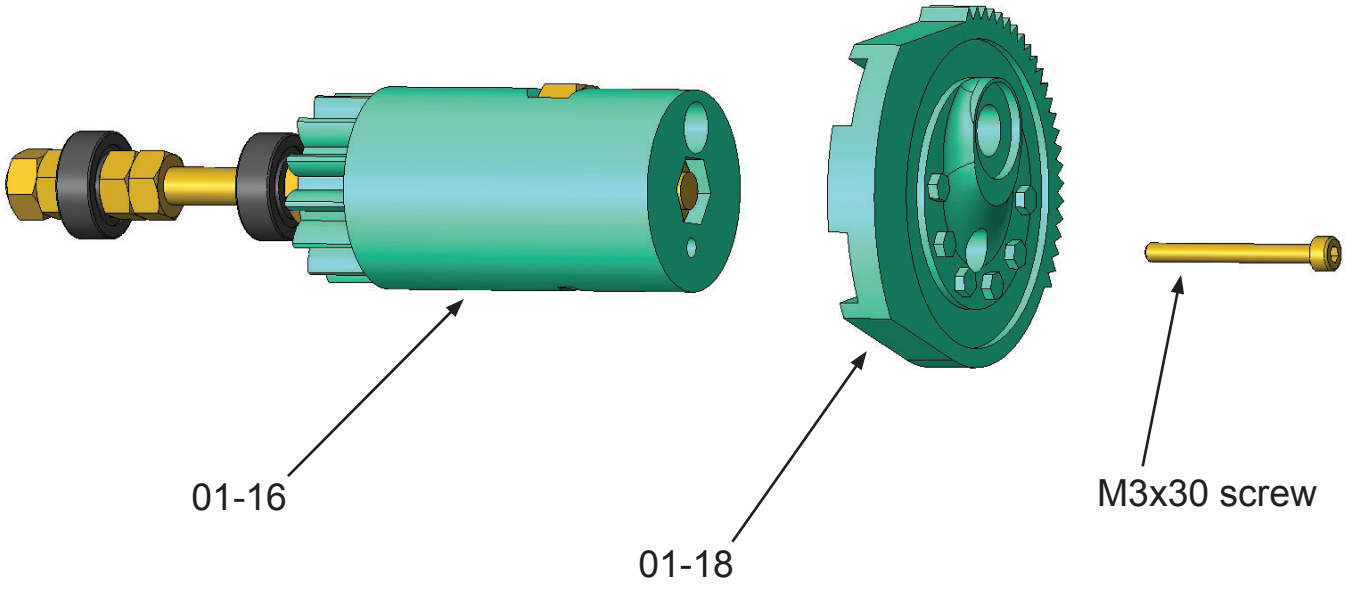

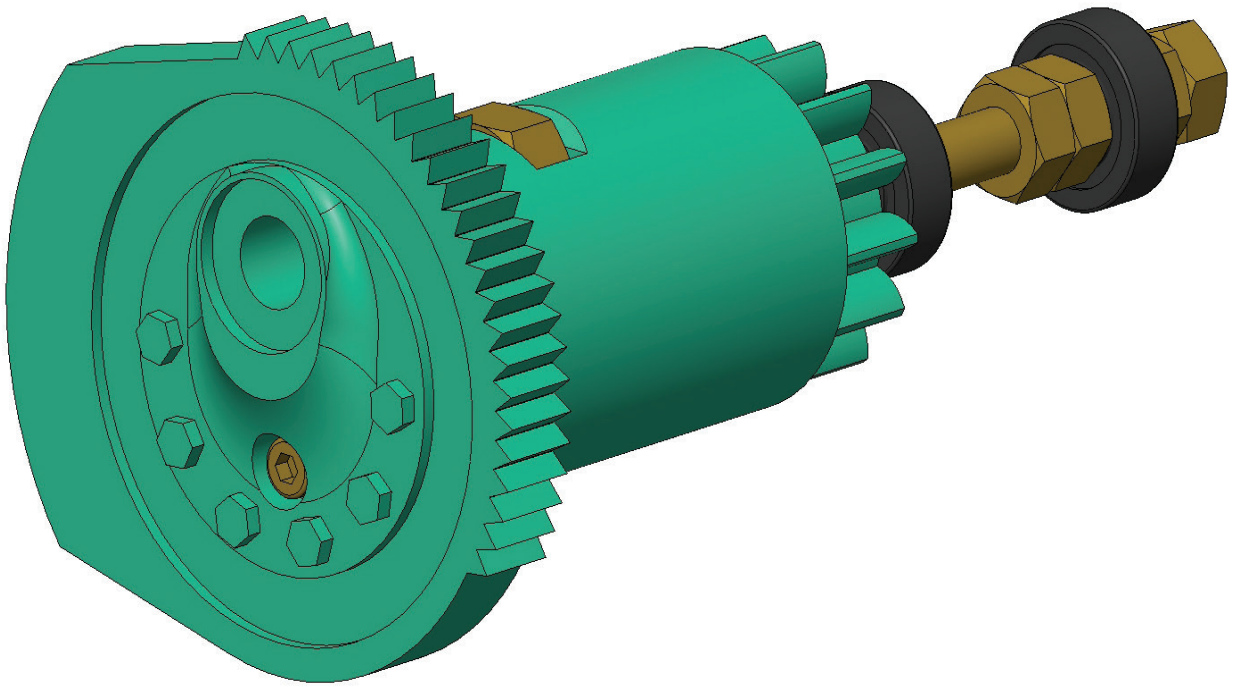

Attach part 01-18 to part 01-16. Use the M3x30mm screw.

Assembly 01 - Lower Hull

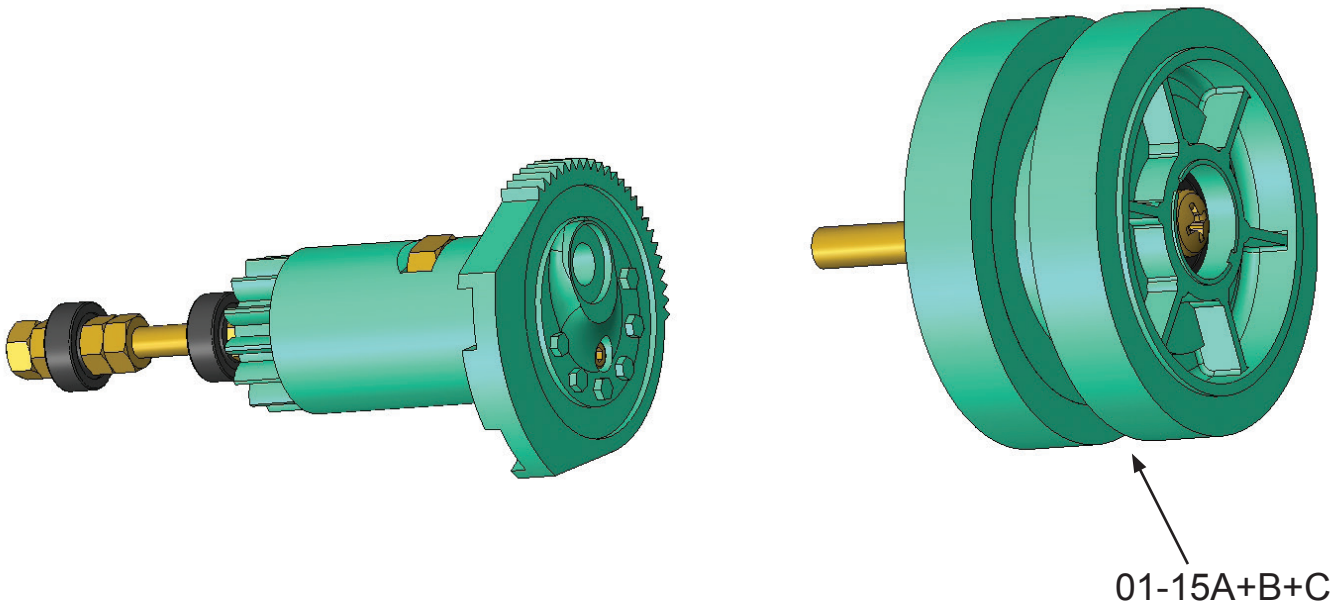

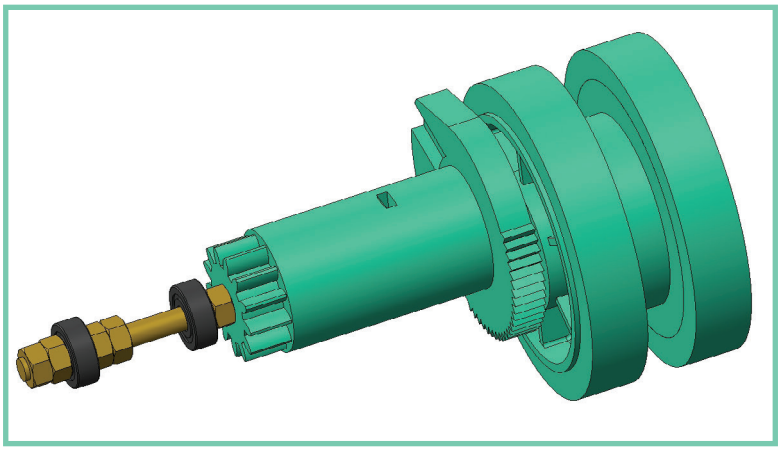

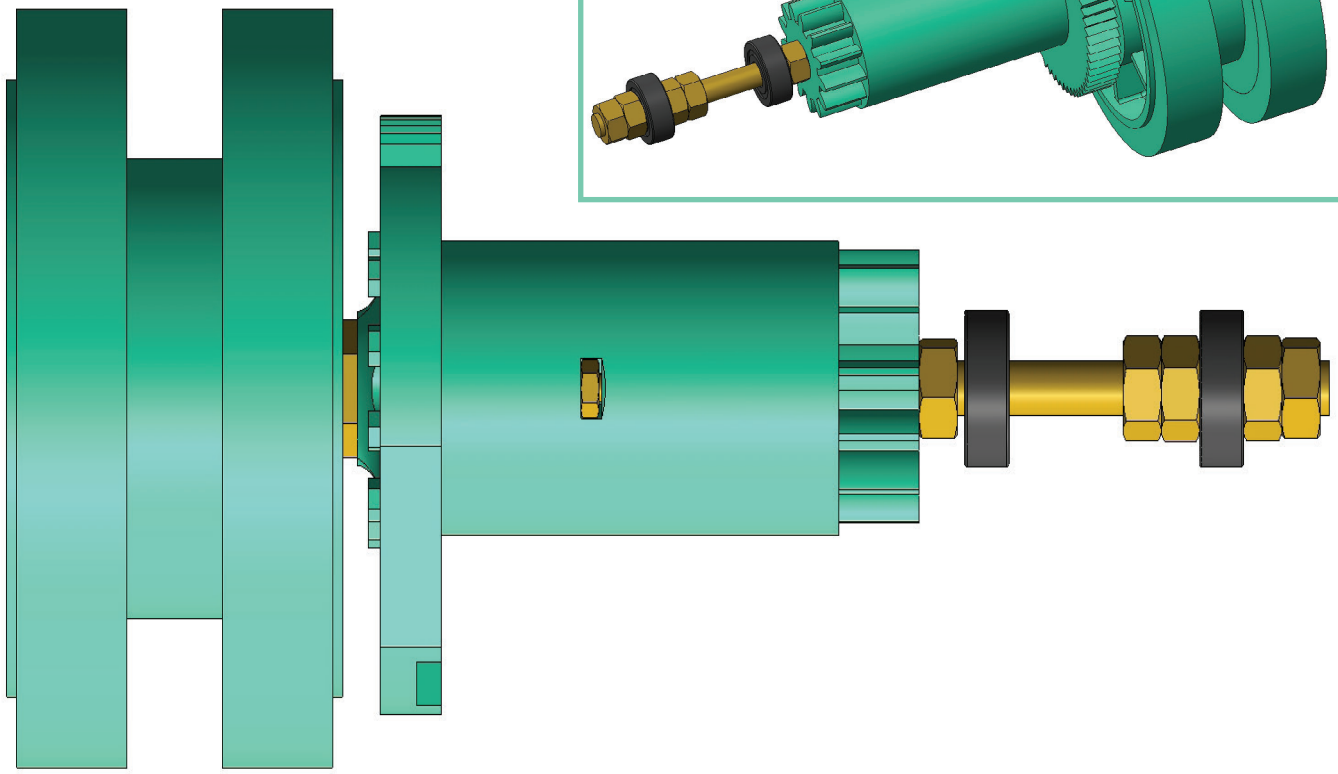

Attach the 01-15 part assembly to the 01-16 and 01-18 parts assembly.

Assembly 01 - Lower Hull

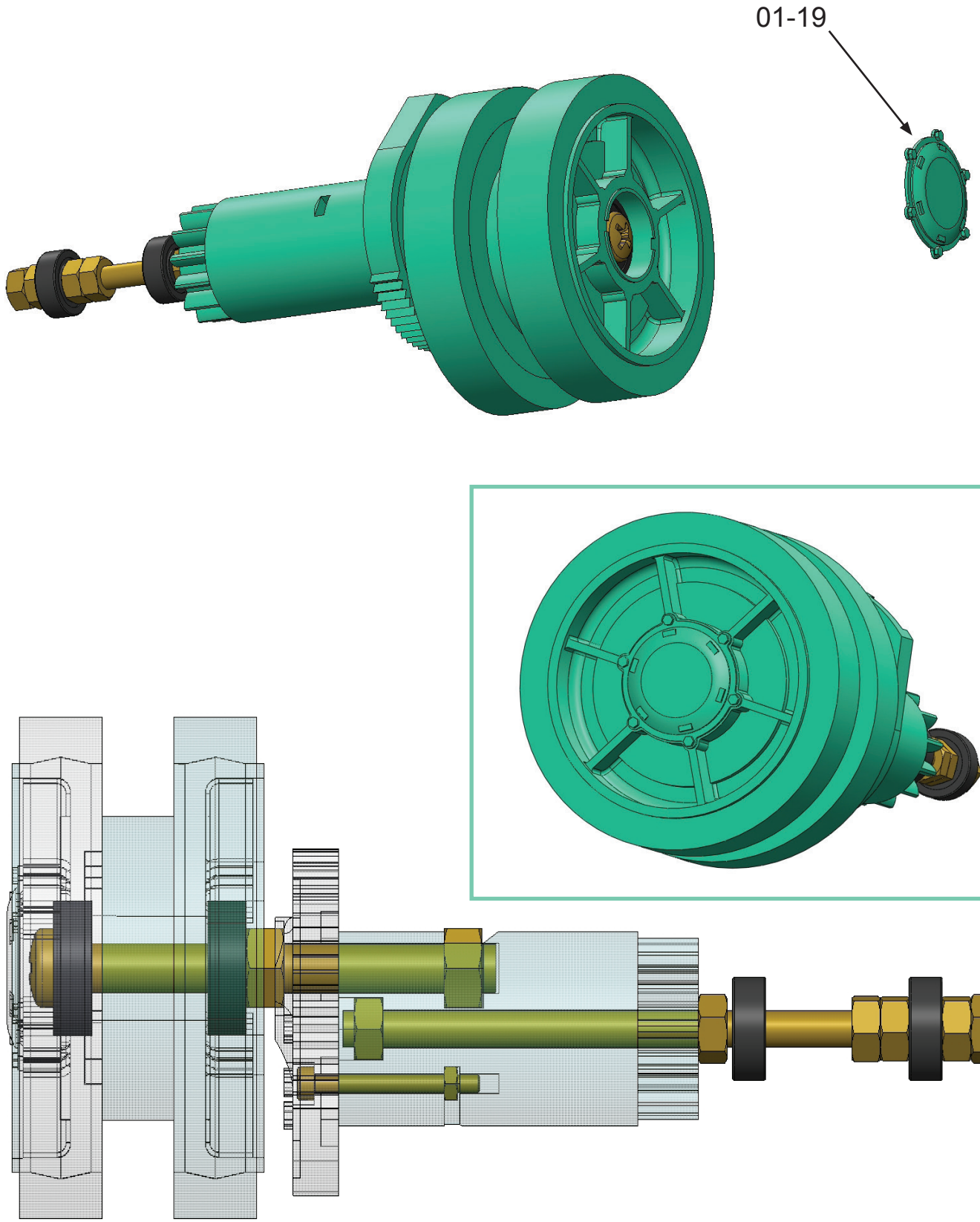

Glue part 01-19 to the assembly of parts 01-16 and 01-18.

Assembly 01 - Lower Hull

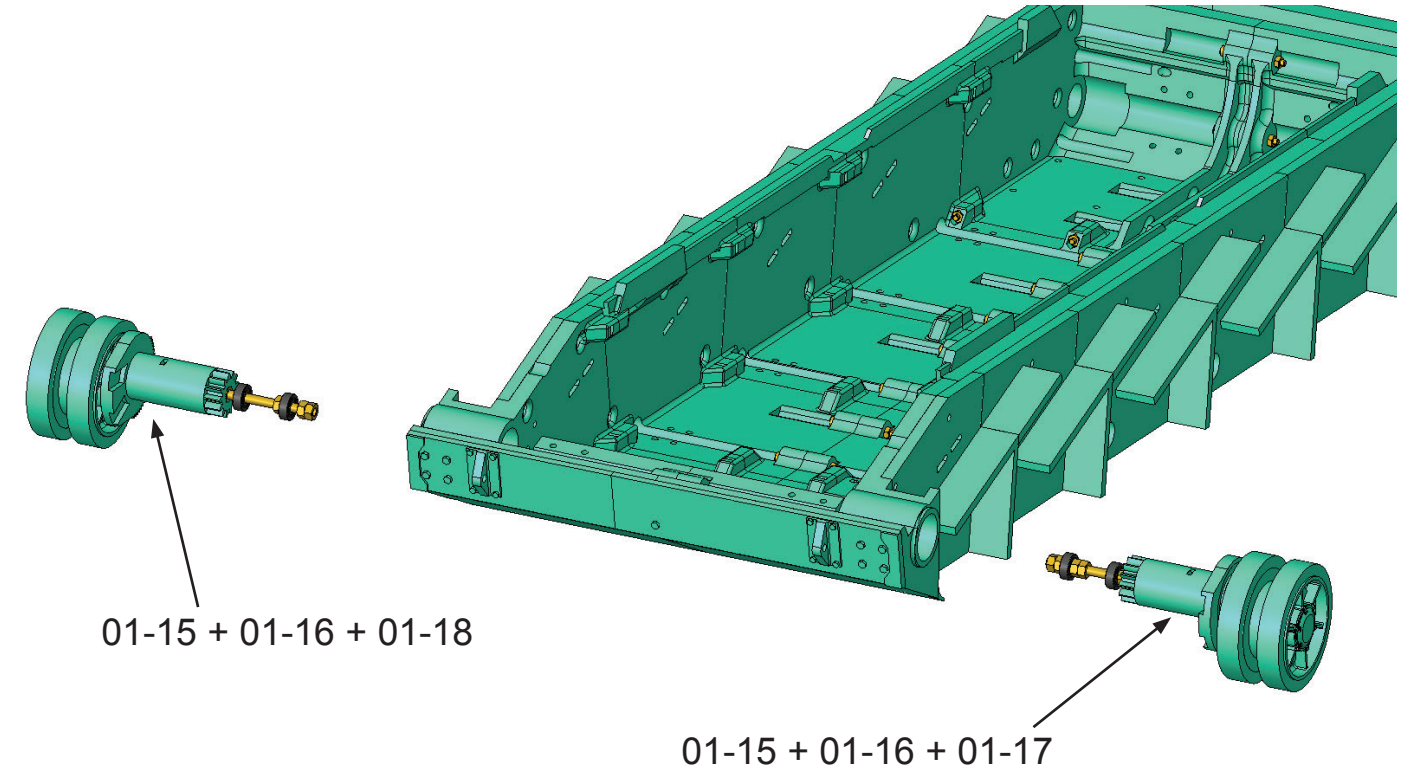

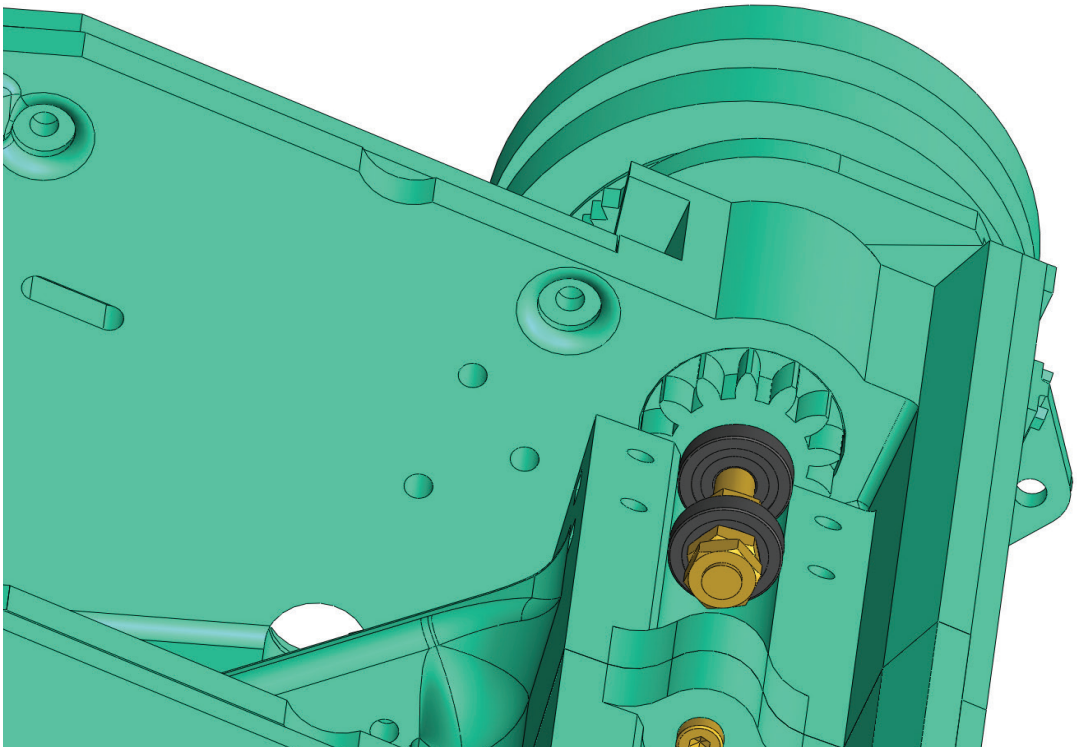

Insert both wheels into part 01-01A and 01-01B.

Assembly 01 - Lower Hull

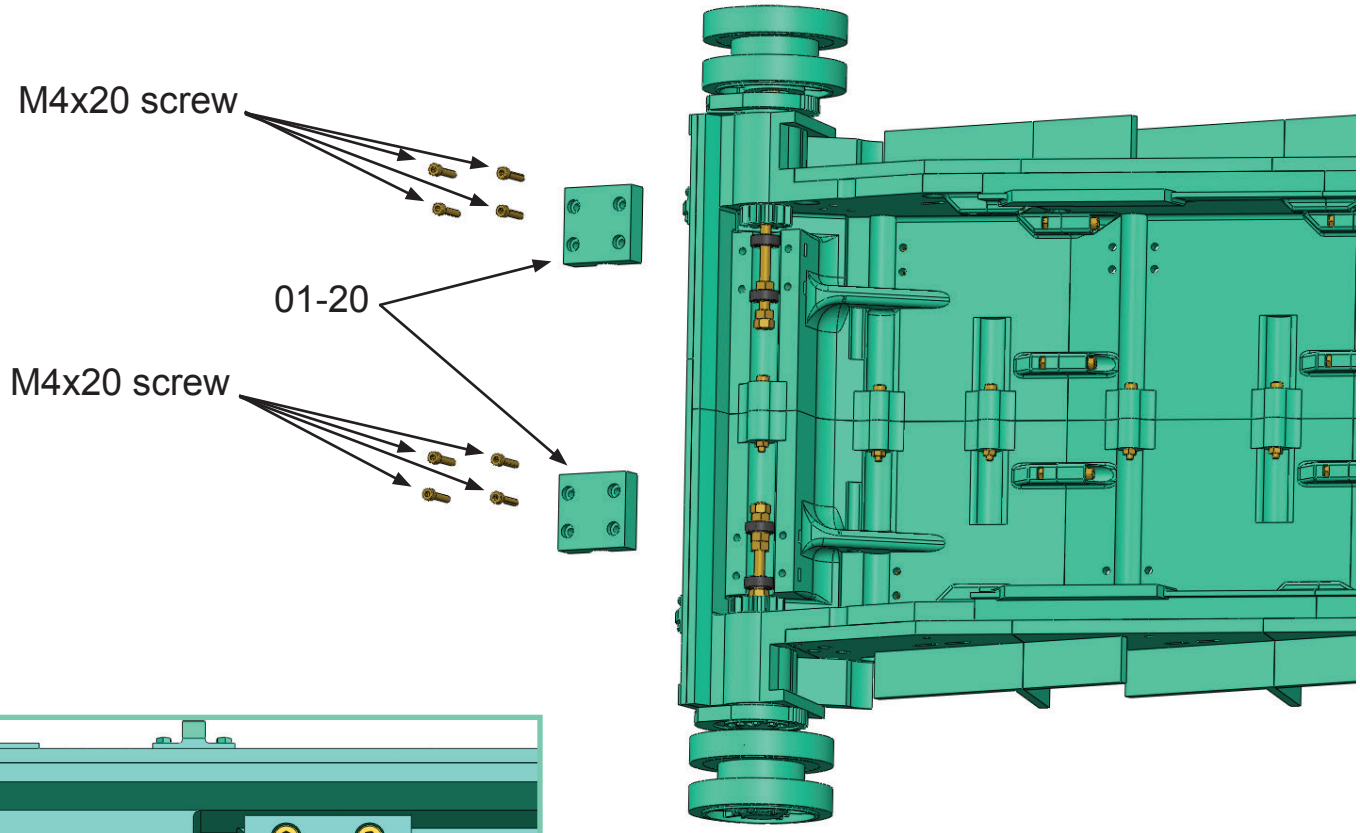

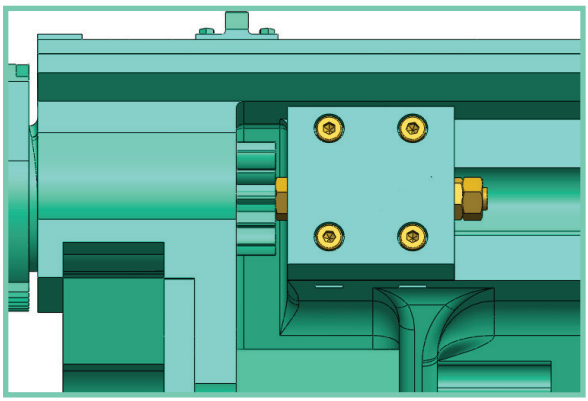

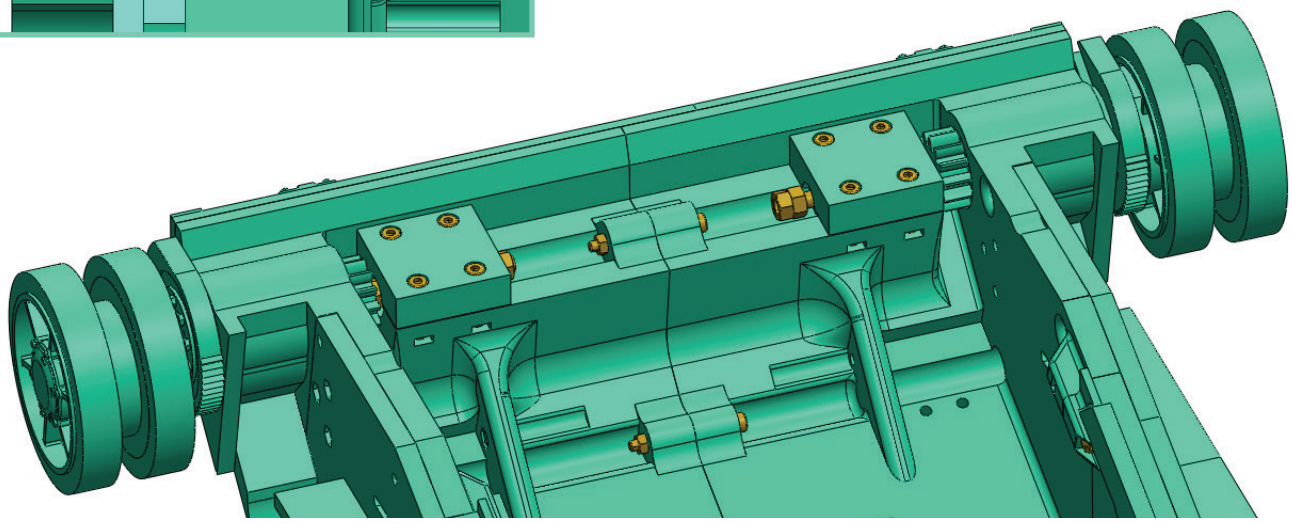

Secure the wheels with parts 01-20.
Use 8 M4x20mm screws.

Assembly 01 - Lower Hull

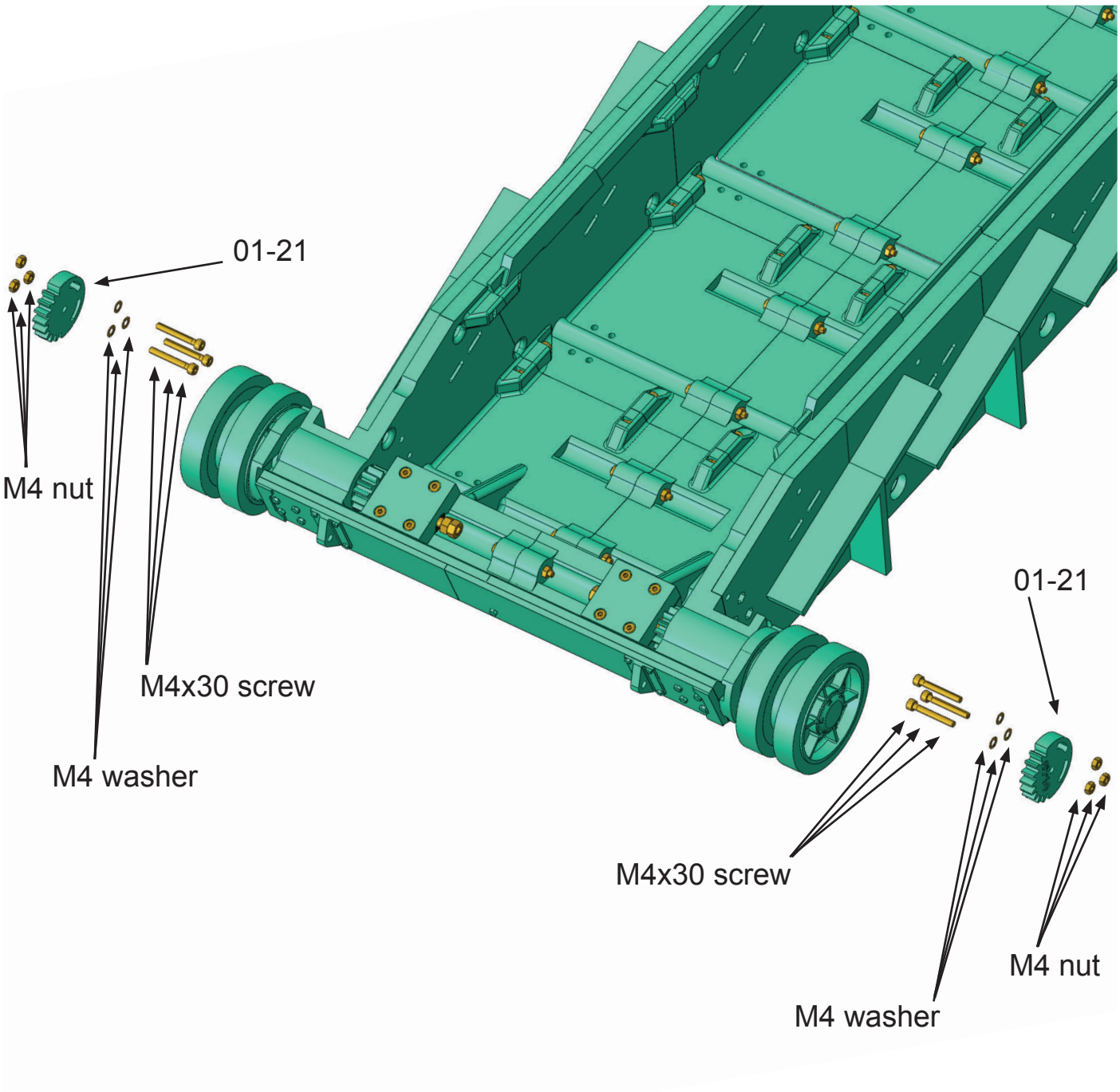

Add two parts 01-21 to the inside of the hull.
Fix the position of parts 01-21 with 6 M4x30mm screws, washers and nuts.
You can rotate the track tensioners by turning parts 01-21.
With the bolts loose, adjust the position of the tensioning wheels.
Then tighten all three screws firmly.

Assembly 01 - Lower Hull

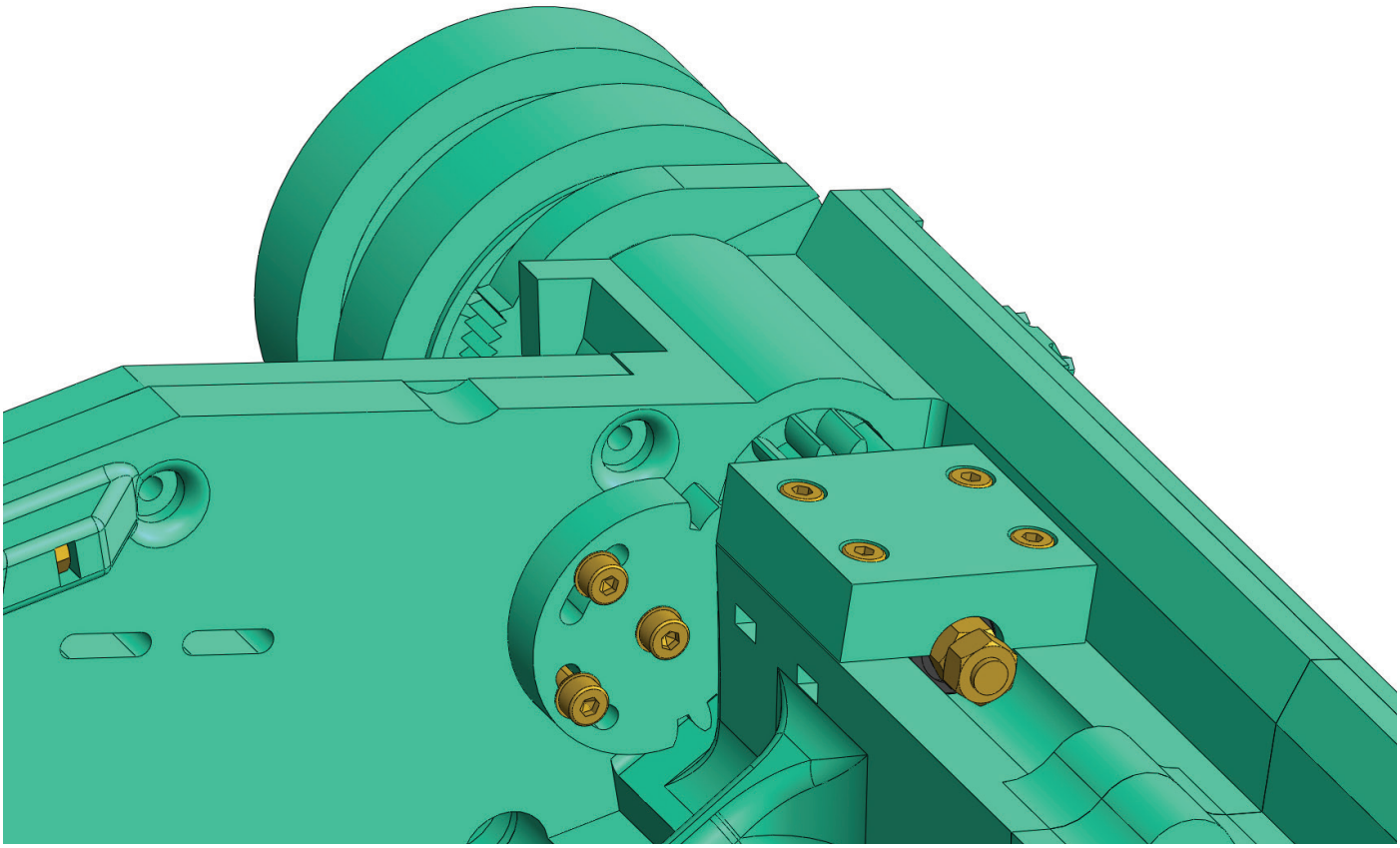

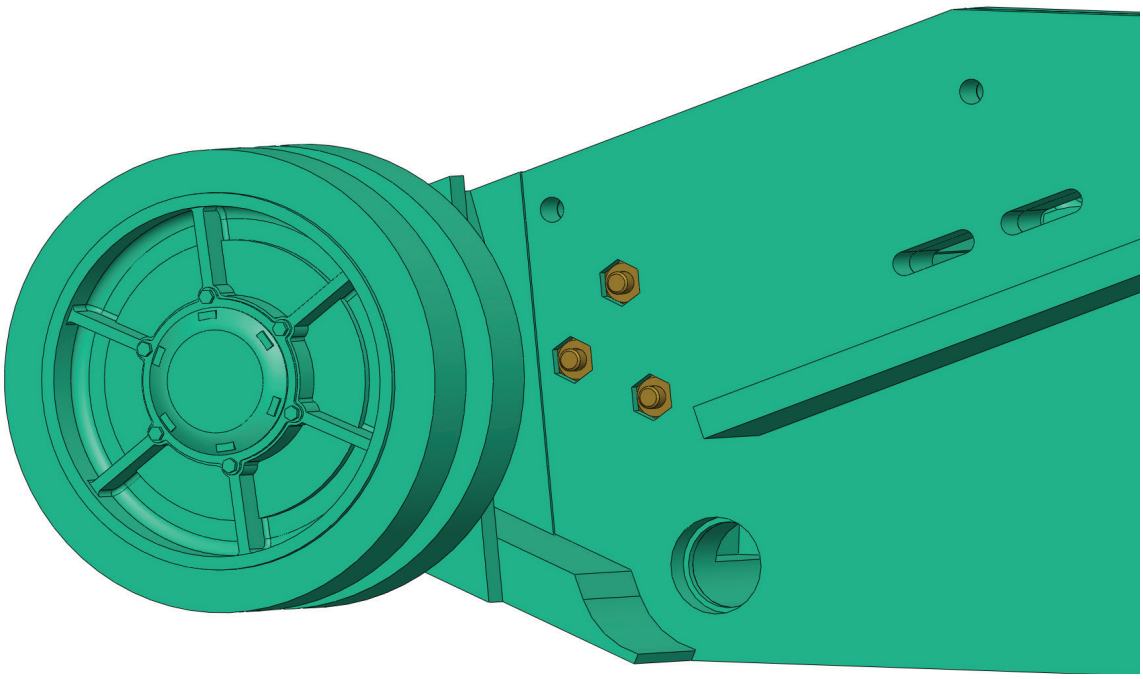

Detail view of installed part 01-21.

Assembly 01 - Lower Hull

5x

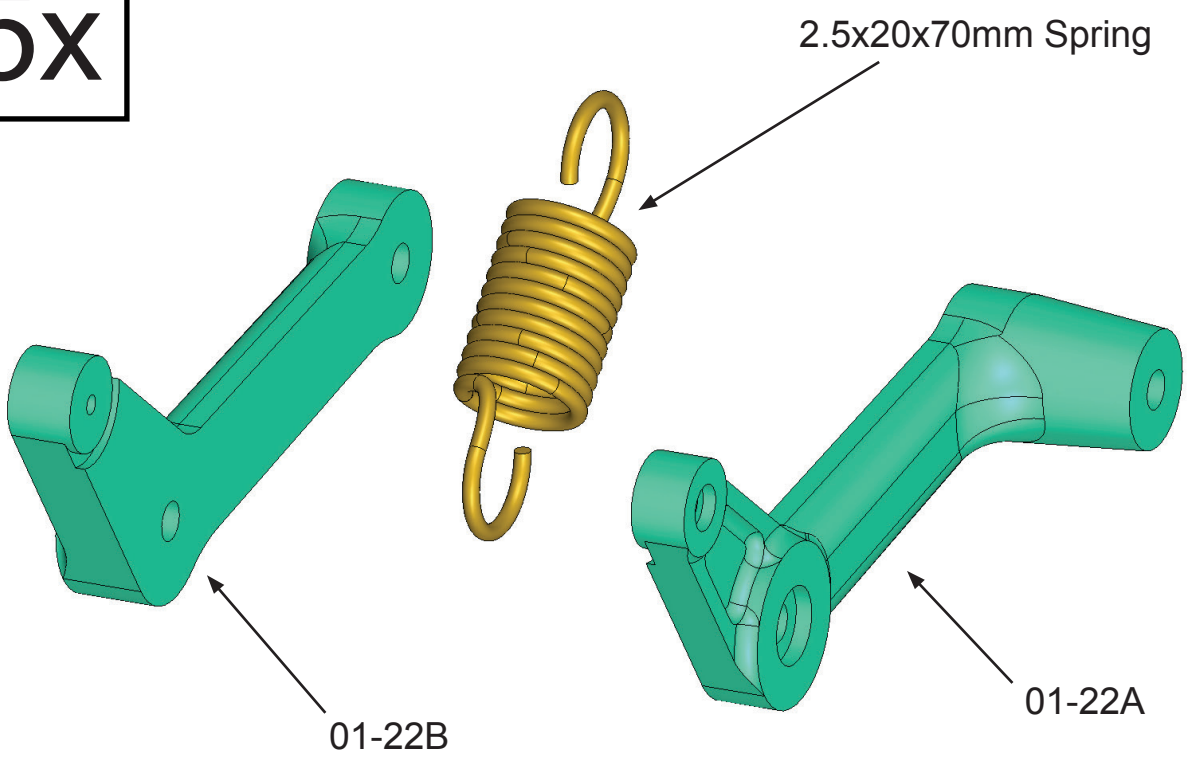

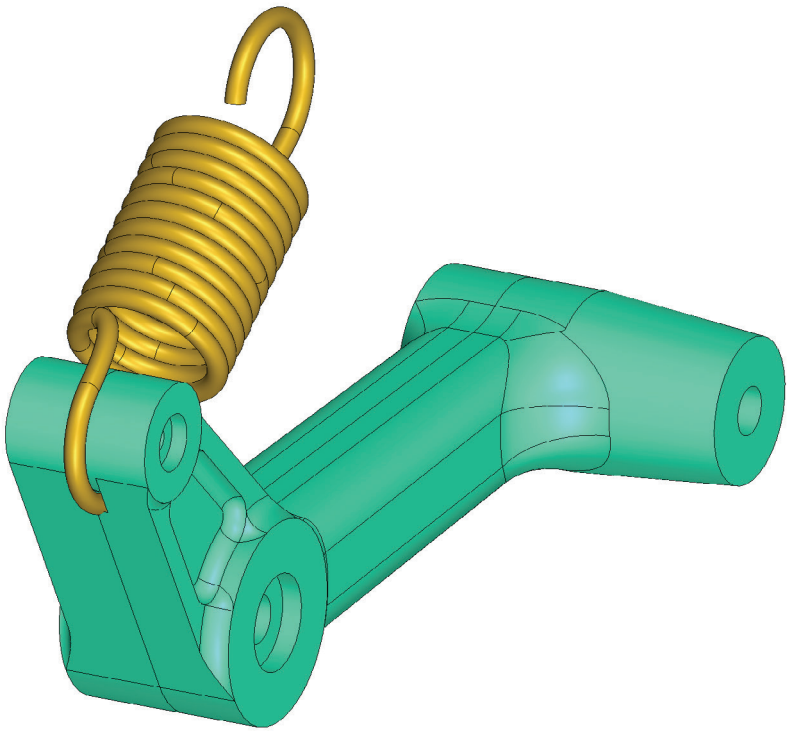

Glue parts 01-22A and 01-22B.
When gluing, insert a 70mm tension spring between parts.
Wire diameter is 2.5mm, total diameter 20mm.

Assembly 01 - Lower Hull

5x

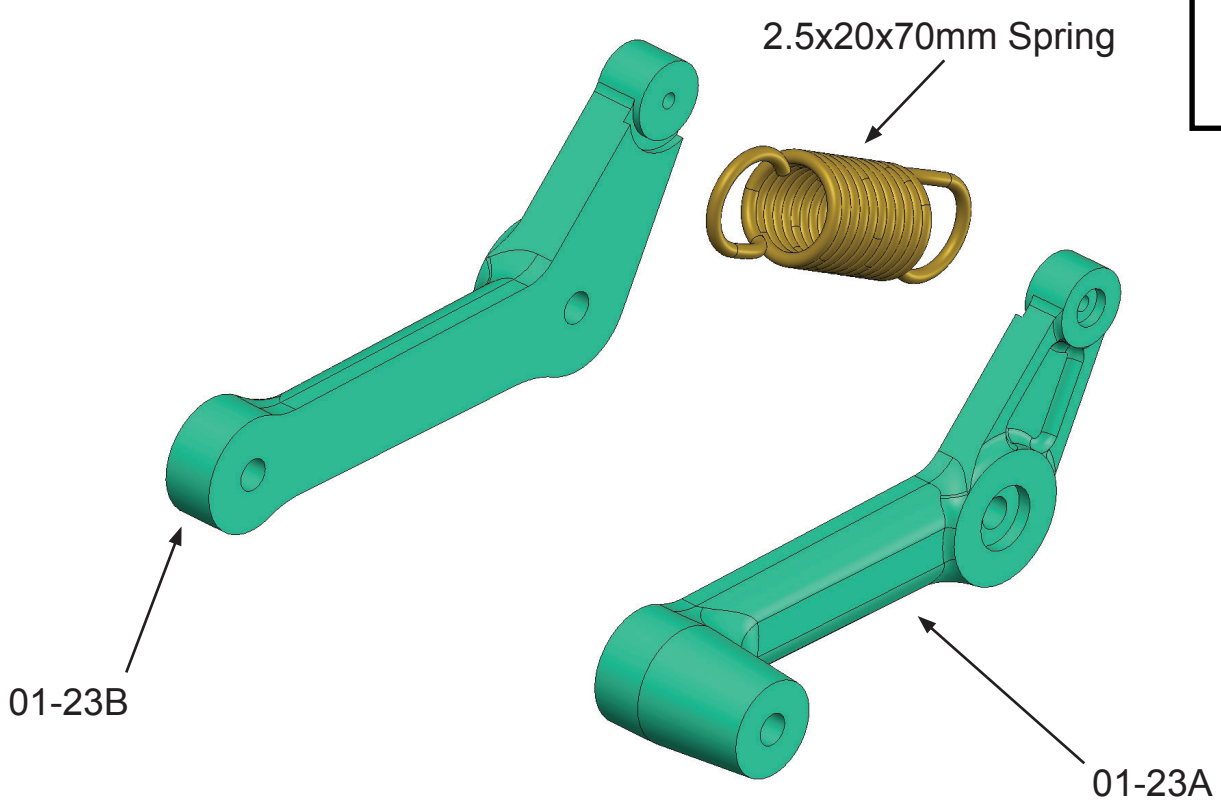

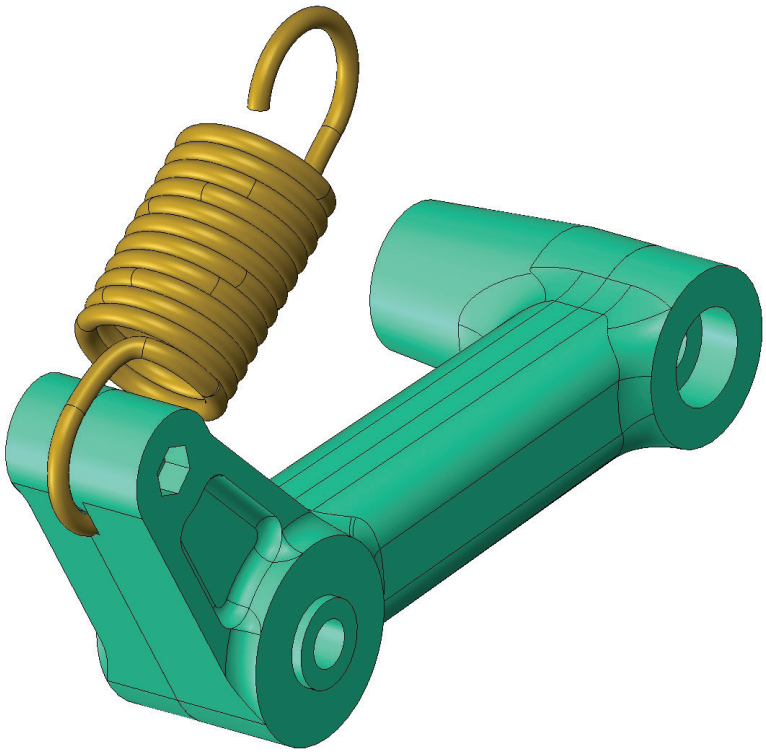

Glue parts 01-23A and 01-23B.
When gluing, insert the same spring between parts.

Assembly 01 - Lower Hull

5x

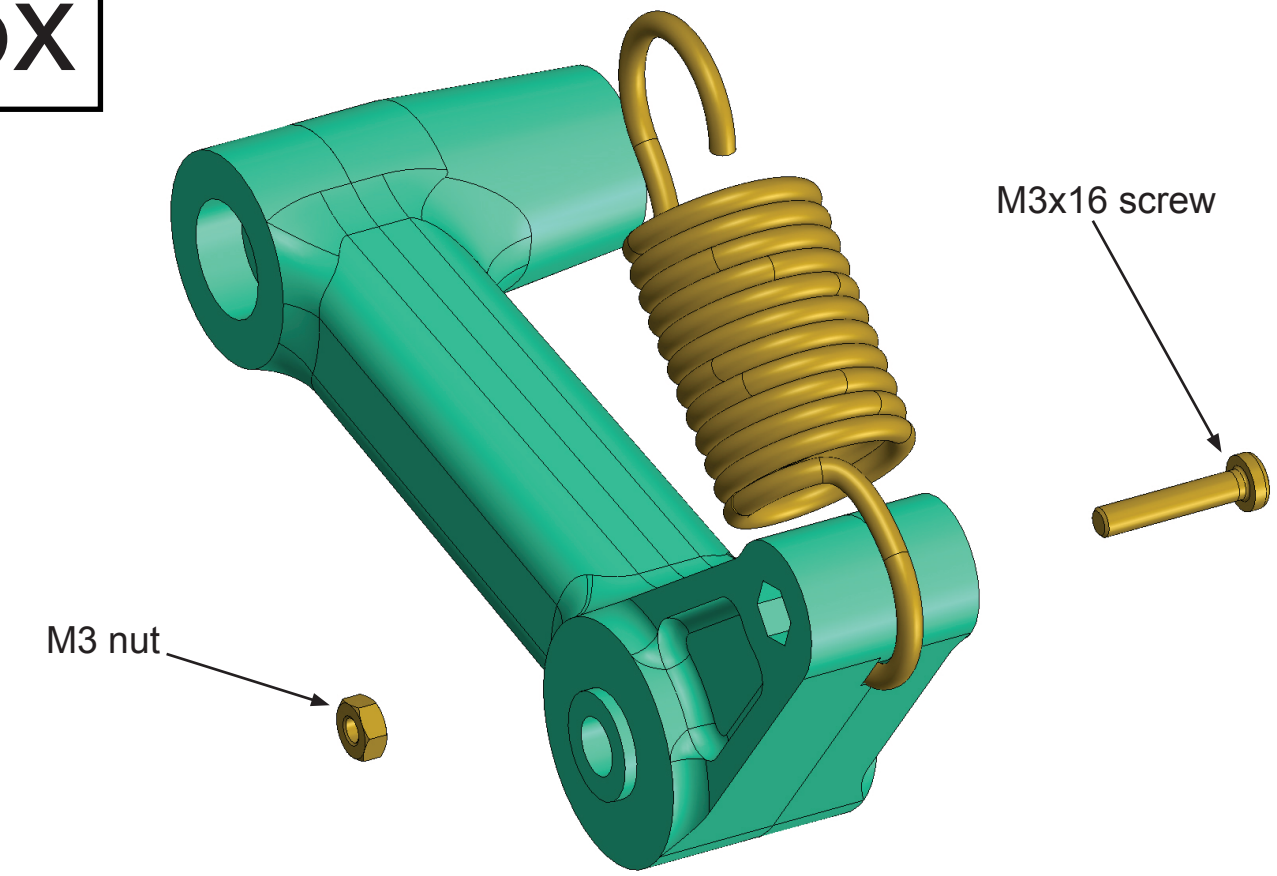

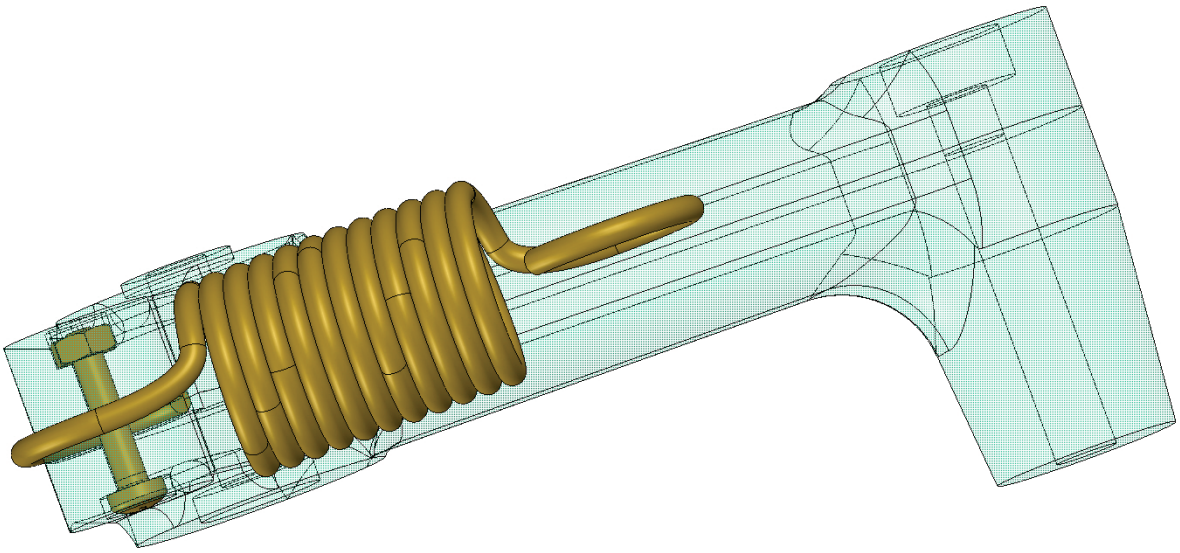

Secure the spring with an M3x16mm screw and an M3 nut.

Assembly 01 - Lower Hull

5x

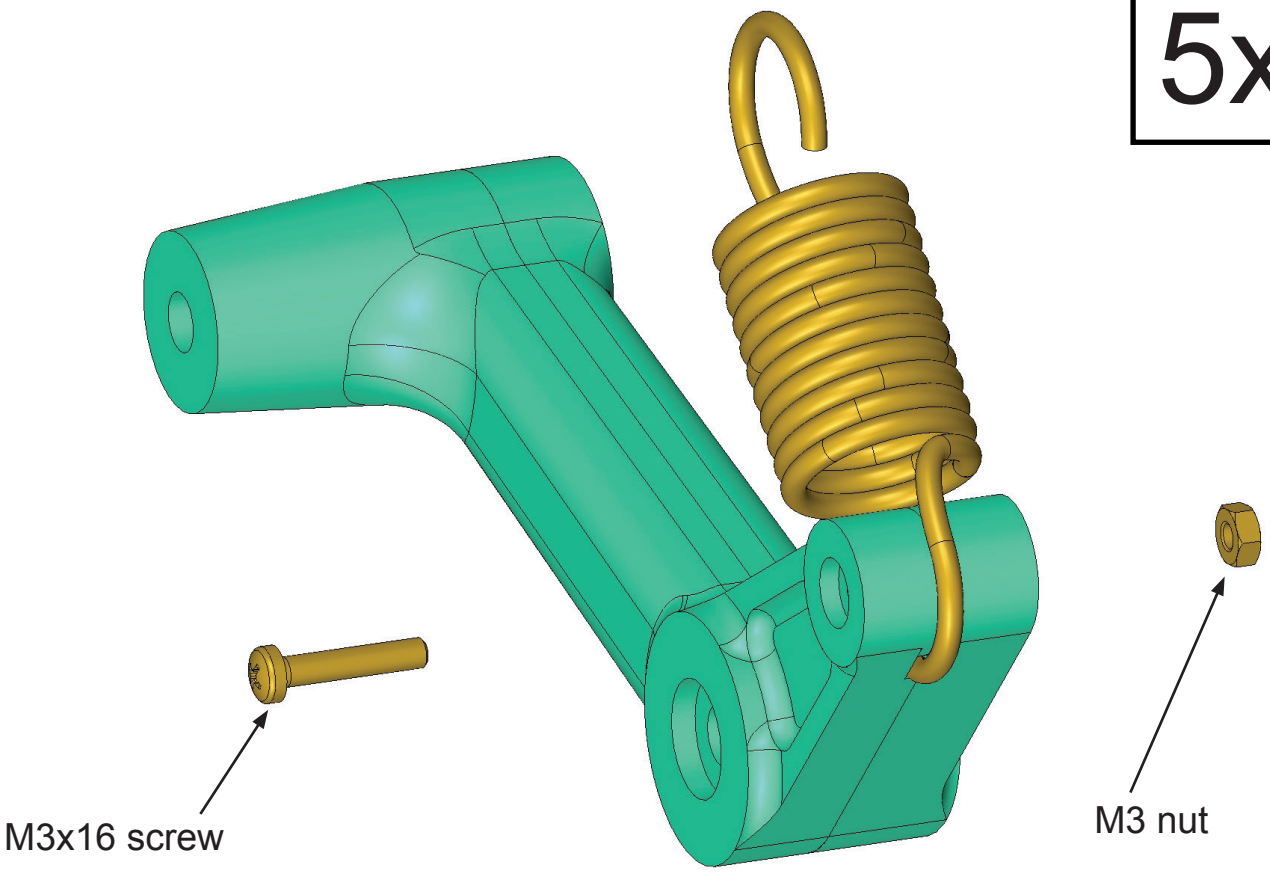

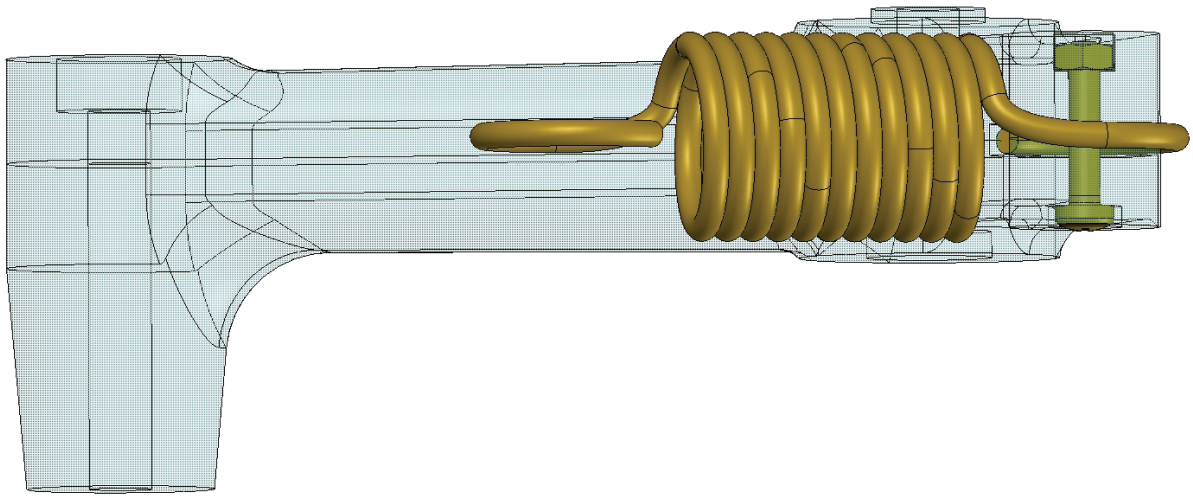

The procedure for the other 5 arms is the same.
Secure the spring with an M3x16mm screw and an M3 nut.

Assembly 01 - Lower Hull

5x

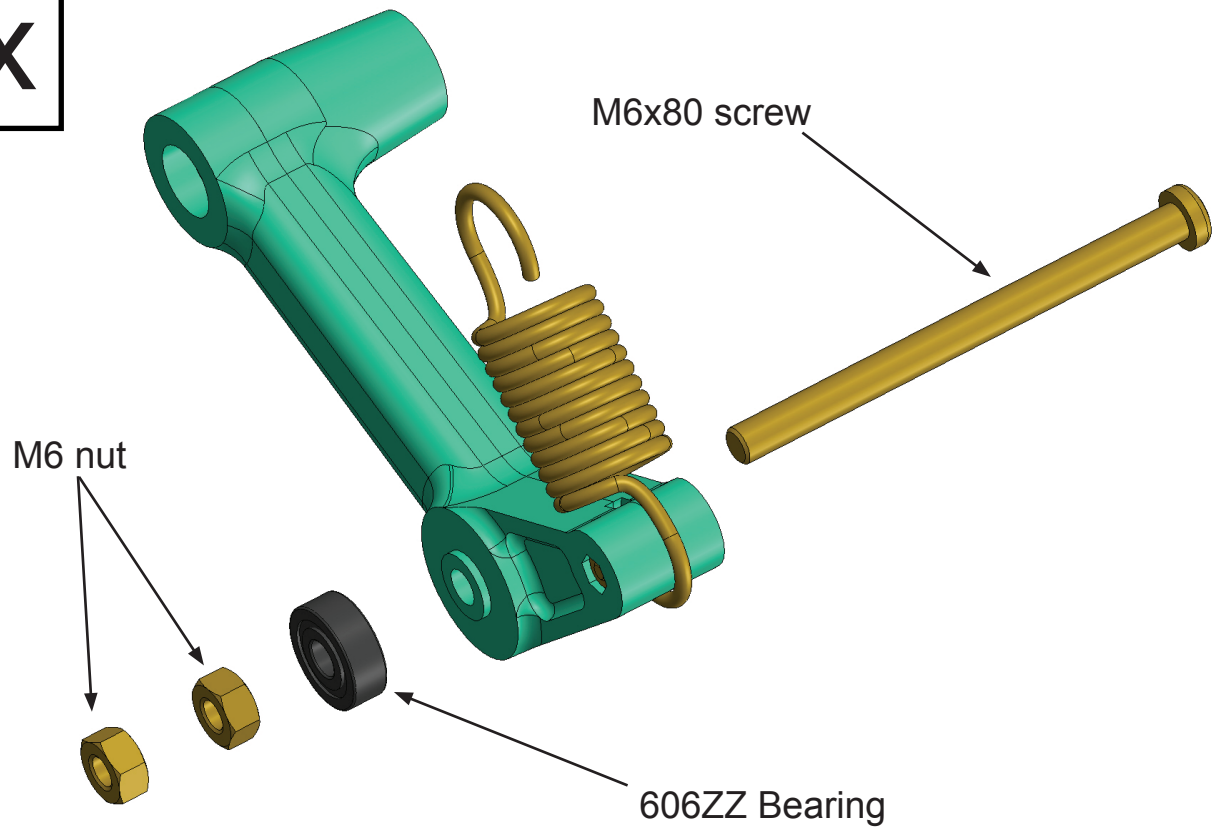

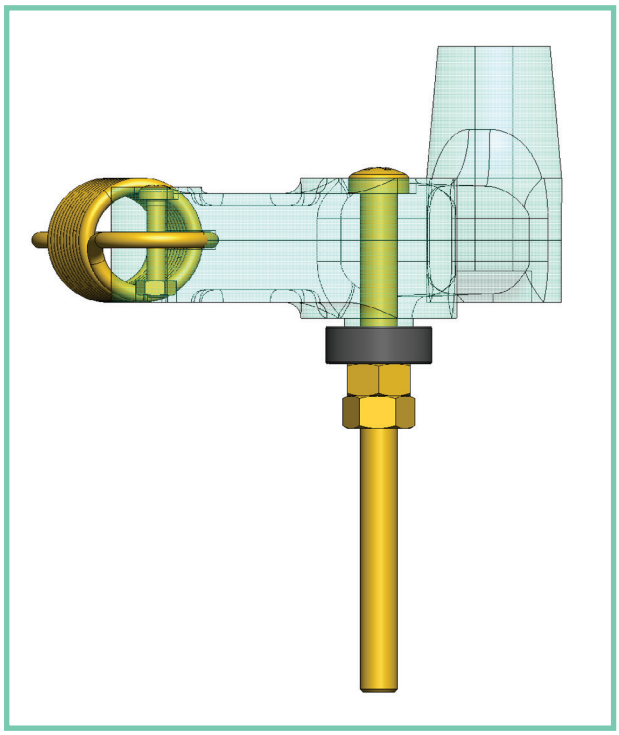

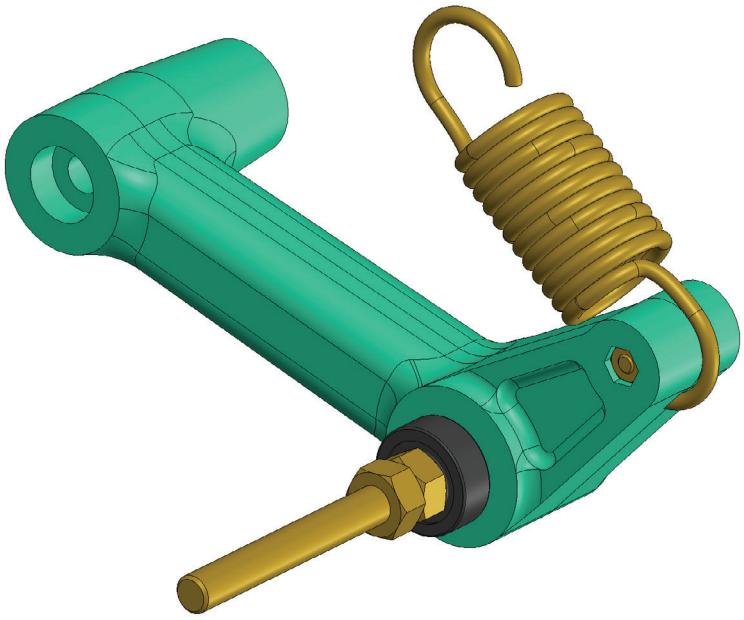

Attach the 606ZZ bearing to the 01-22A and 01-22B assembly.
Use an M6x80mm screw and two M6 nuts.

Assembly 01 - Lower Hull

5x

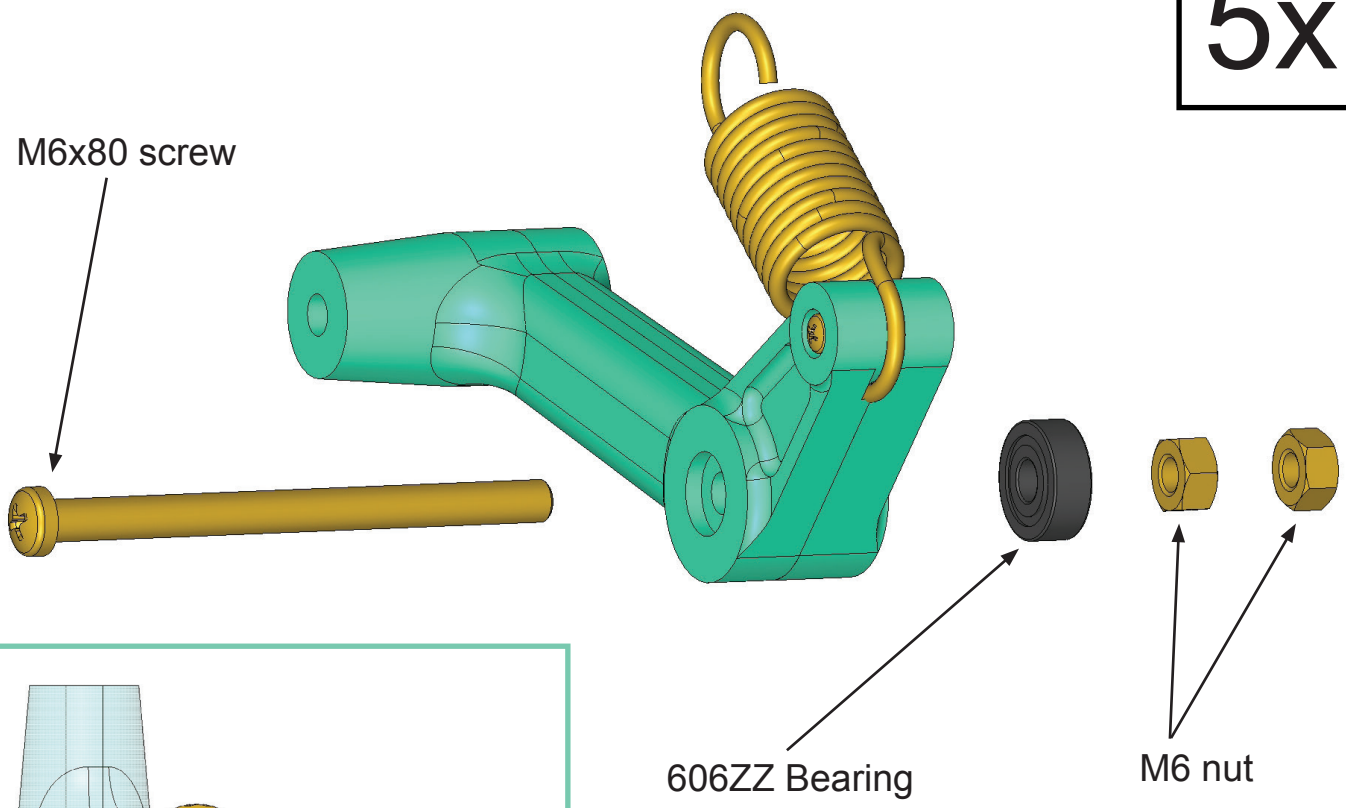

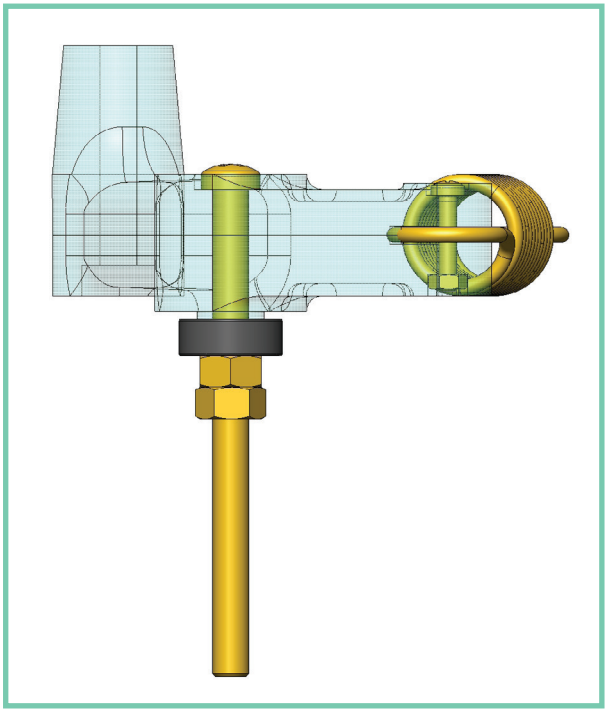

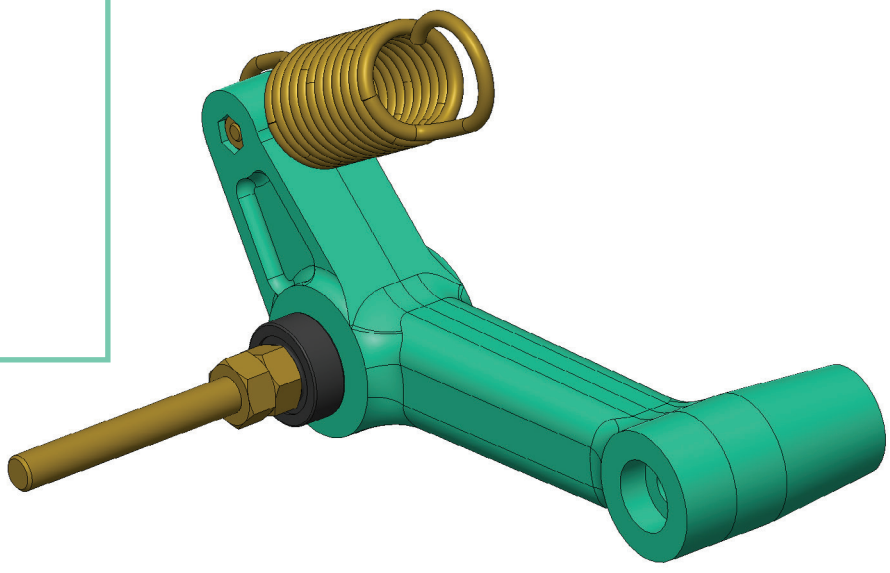

Attach the 606ZZ bearing to the 01-23A and 01-23B assembly.
Use an M6x80mm screw and two M6 nuts.

Assembly 01 - Lower Hull

5x

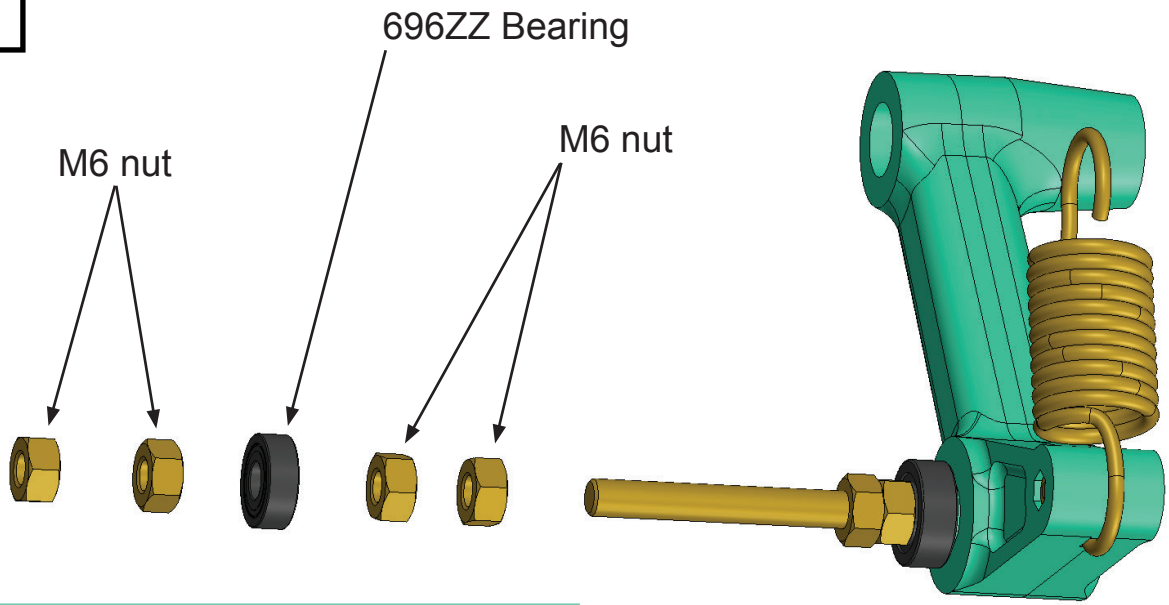

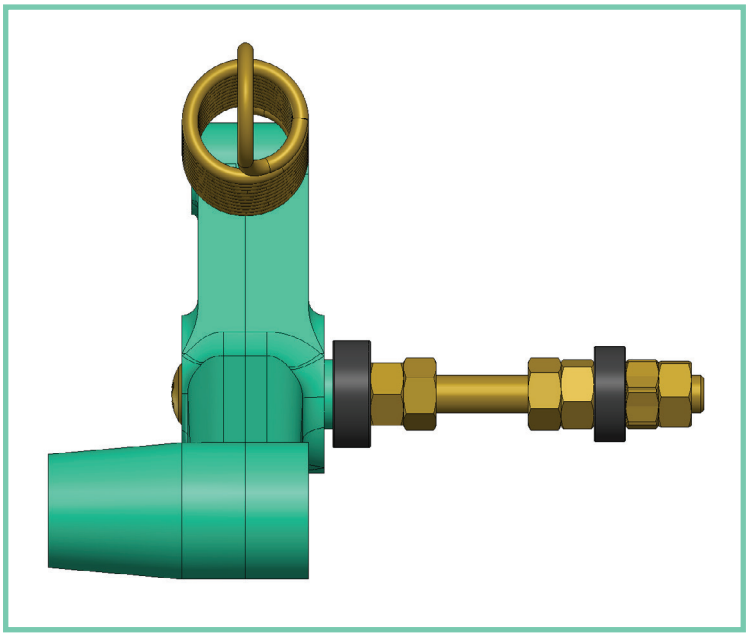

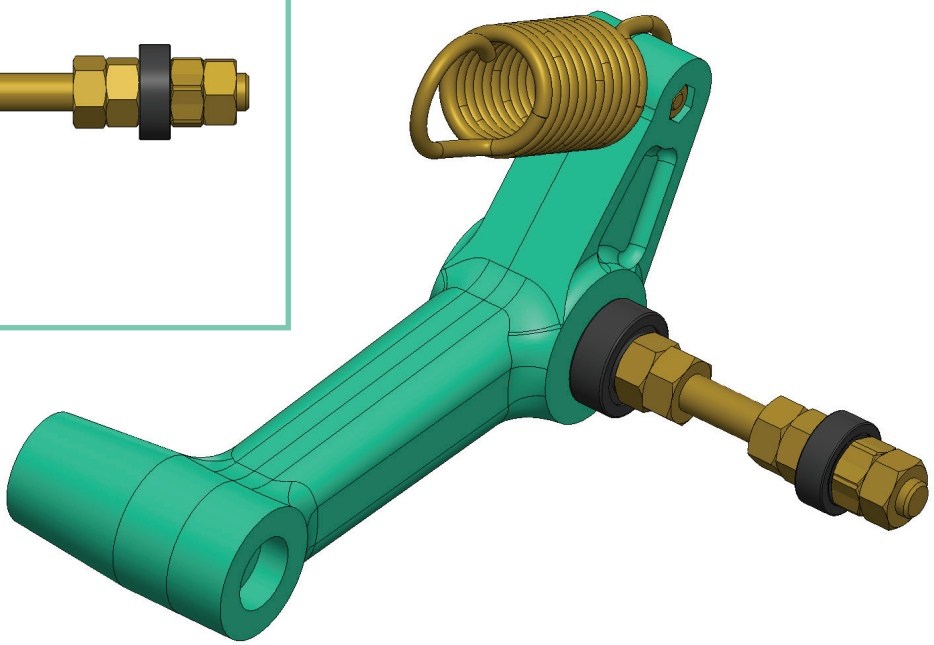

Attach the 696ZZ bearing to the 01-22A and 01-22B assembly.
Use four M6 nuts.

Assembly 01 - Lower Hull

5x

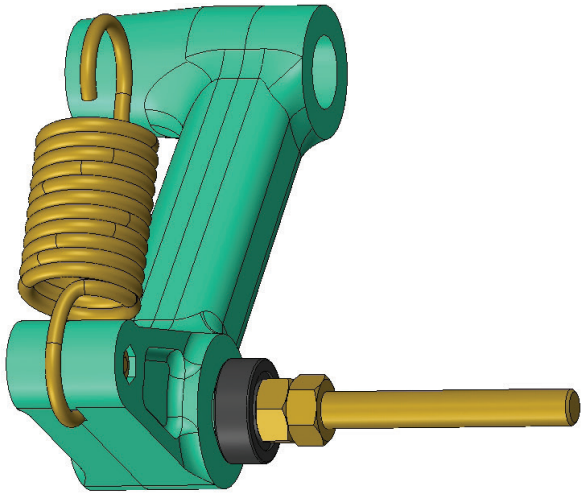

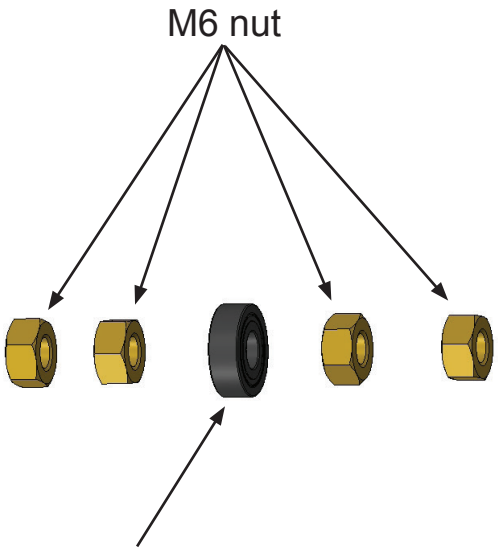

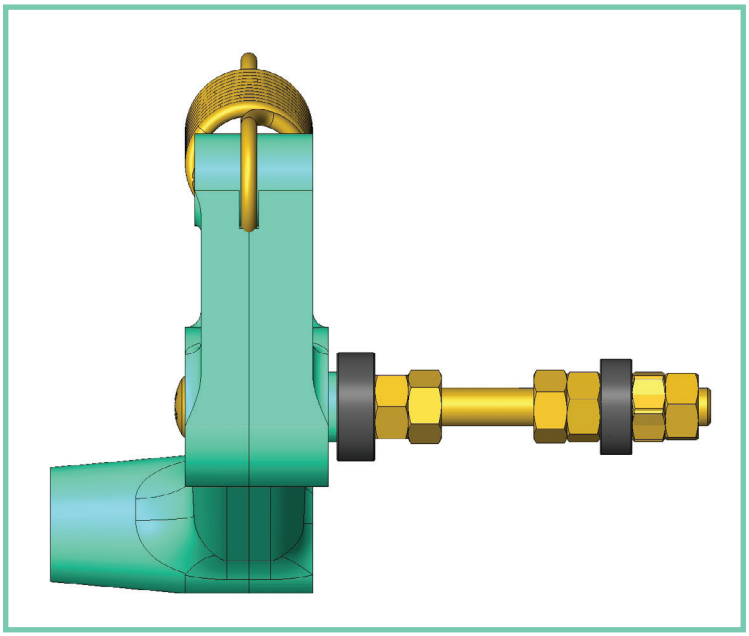

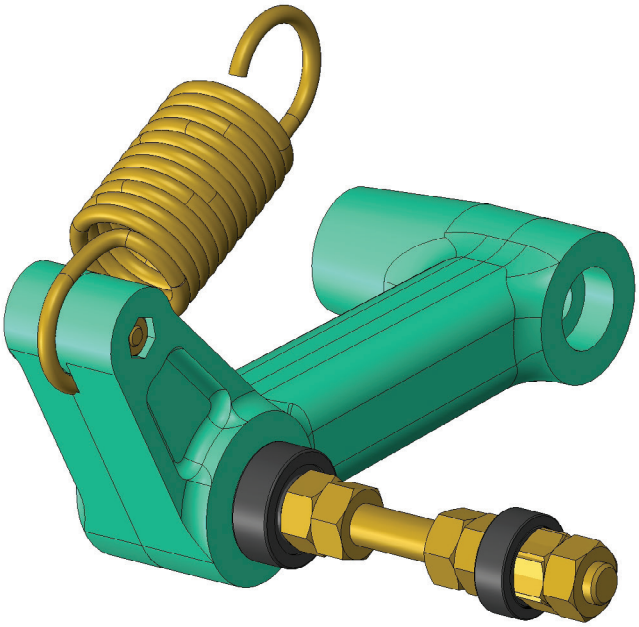

Attach the 696ZZ bearing to the 01-23A and 01-23B assembly.
Use four M6 nuts.

Assembly 01 - Lower Hull

5x

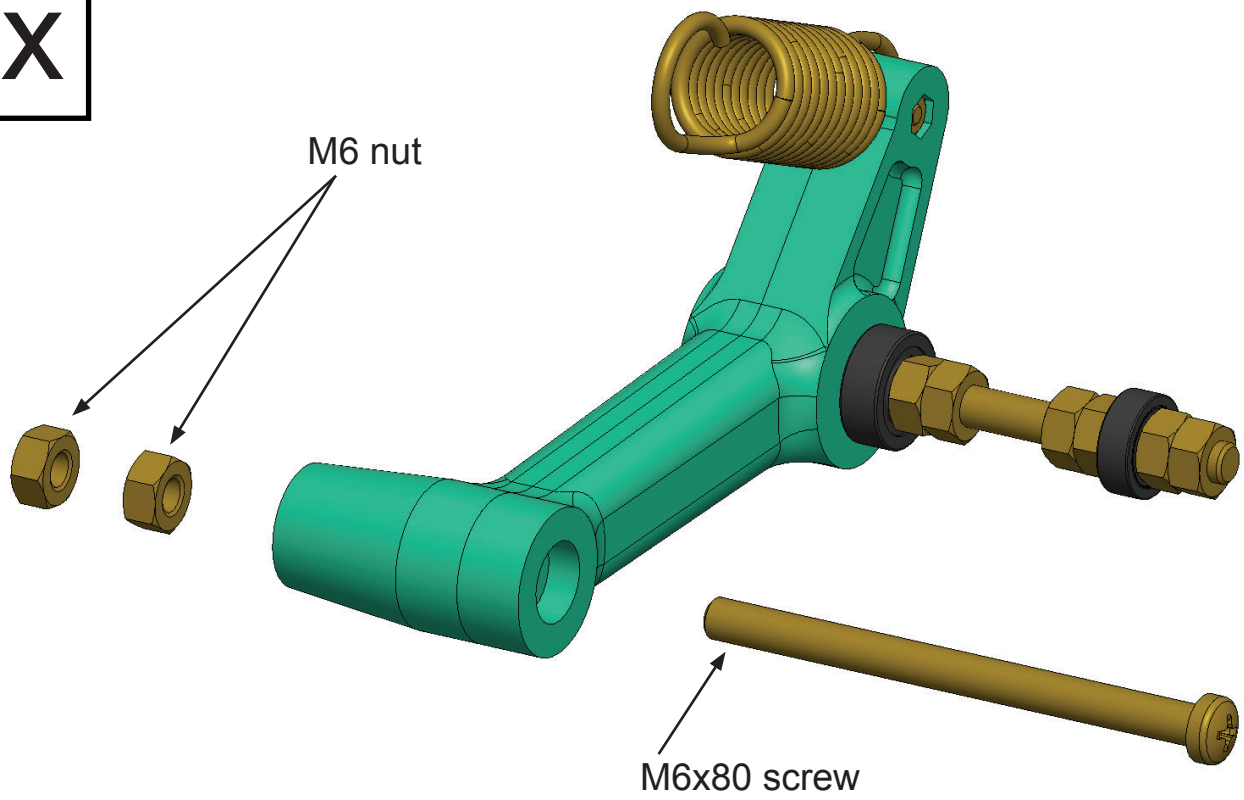

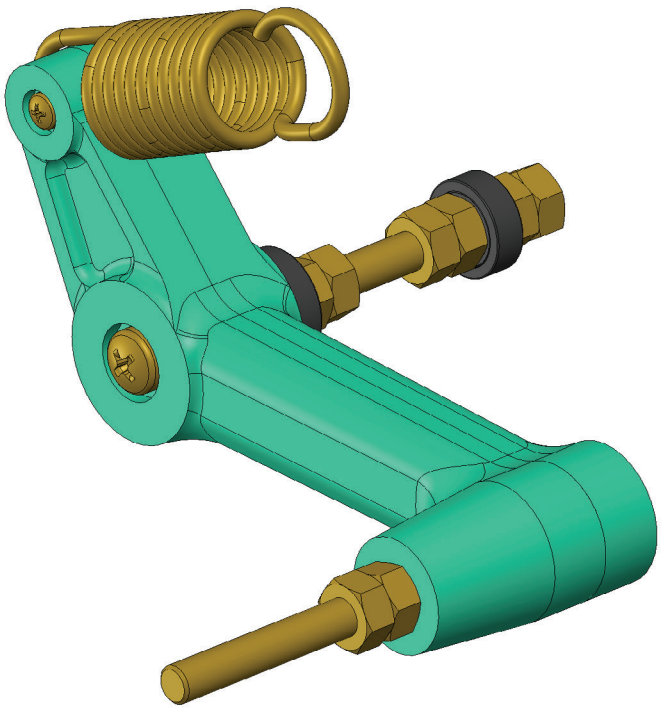

Attach the M6x80mm screw to the 01-22A and 01-22B assembly.
From the other side, secure with two M6 nuts.

Assembly 01 - Lower Hull

5x

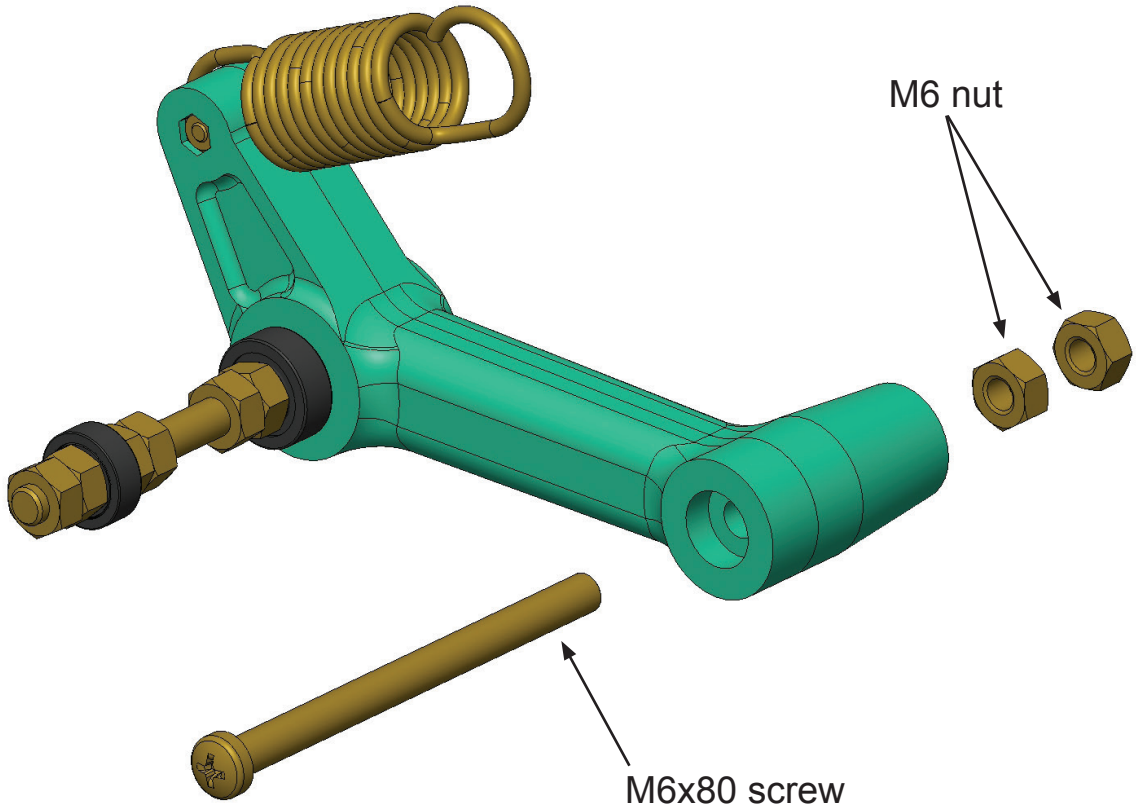

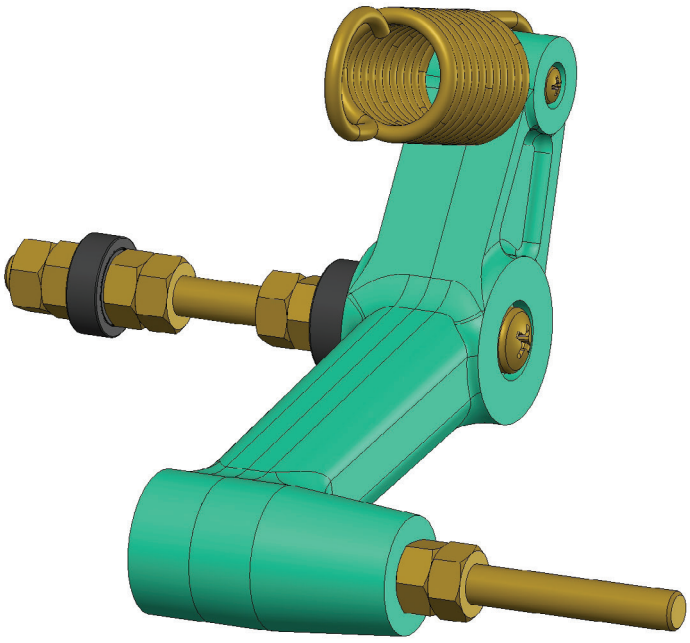

Attach the M6x80mm screw to the 01-23A and 01-23B assembly.
From the other side, secure with two M6 nuts.

Assembly 01 - Lower Hull

10x

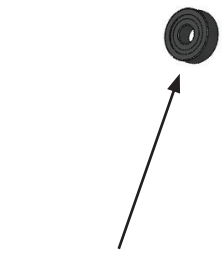

606zz Bearing

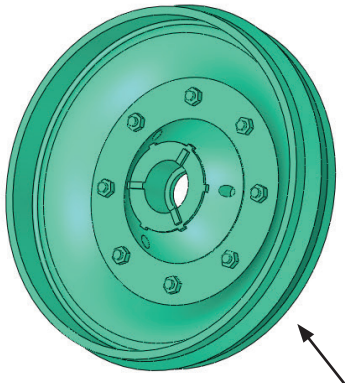

01-24B

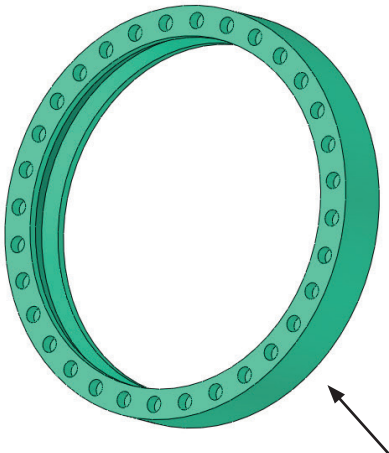

01-24A

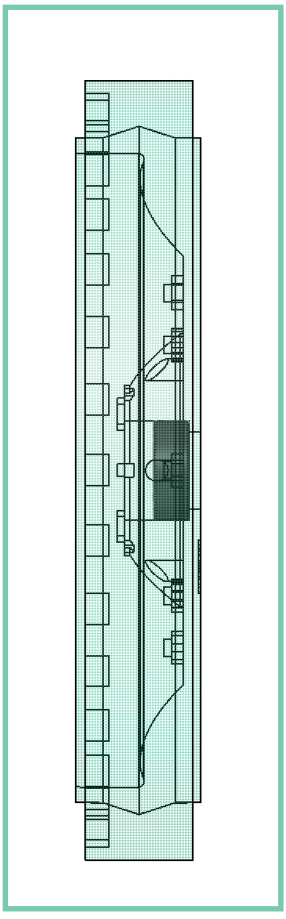

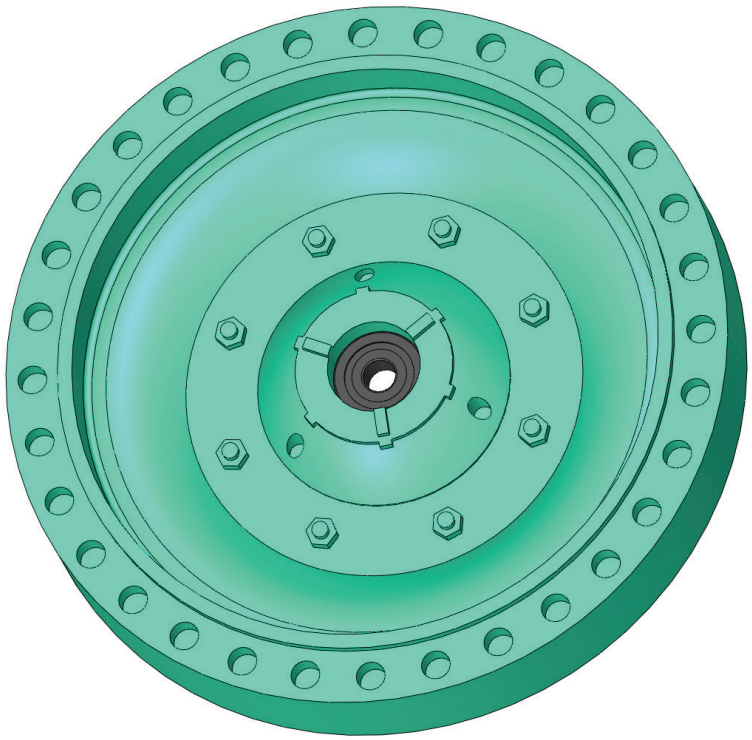

Insert the 606zz bearing into part 01-24B.
Install part 01-24A. Glue if necessary.
You can use alternative part 01-24AB.

Assembly 01 - Lower Hull

10x

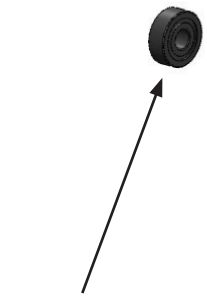

606zz Bearing

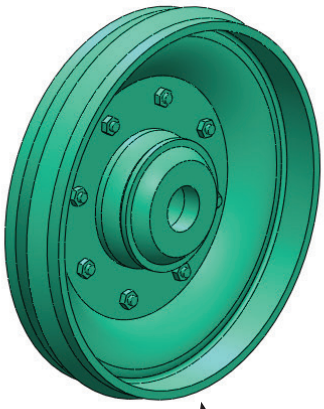

01-24C



01-24A

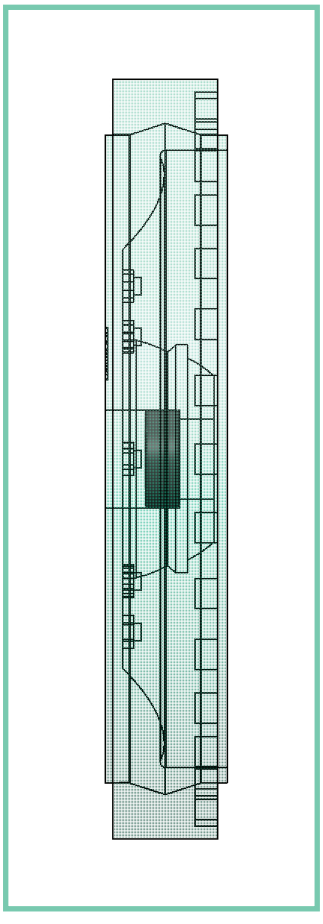

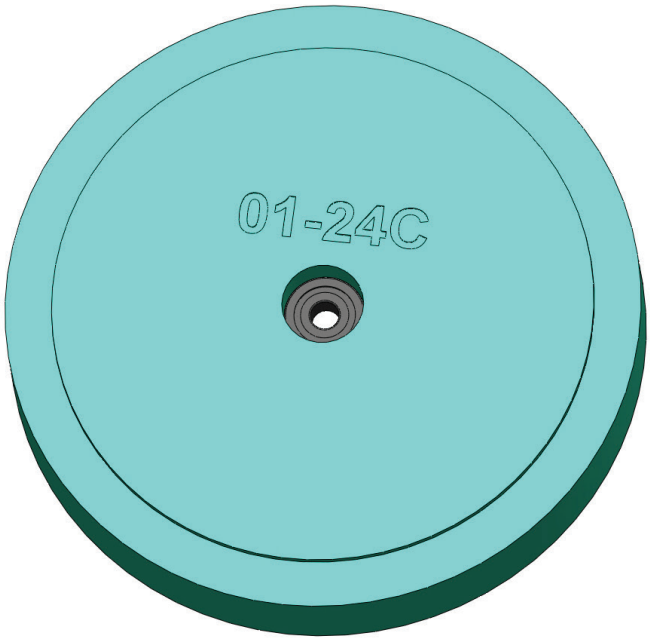

Insert the 606zz bearing into part 01-24C.
Install part 01-24A. Glue if necessary.
You can use alternative part 01-24AC.

Assembly 01 - Lower Hull

10x

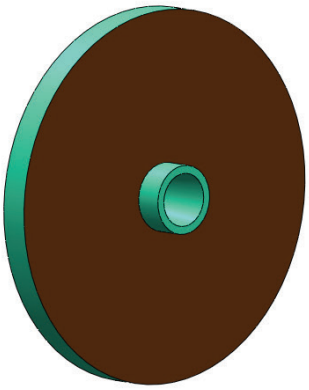

01-24D

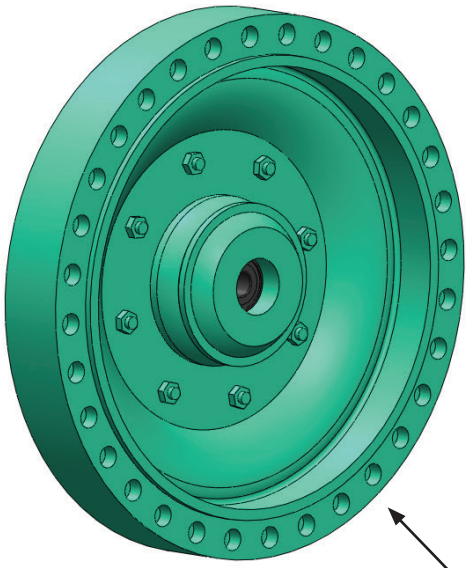

01-24A+C

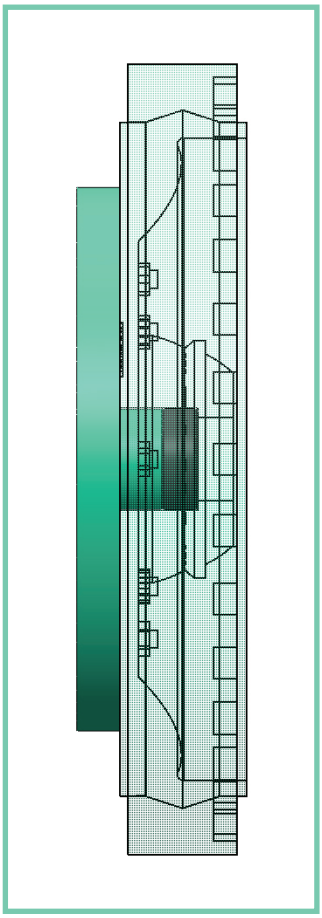



Glue part 01-24D to the assembly of parts 01-24A and 01-24C.
Before gluing, check the correct position of the bearing.
Apply the adhesive only to the areas marked in red.

Assembly 01 - Lower Hull

10x

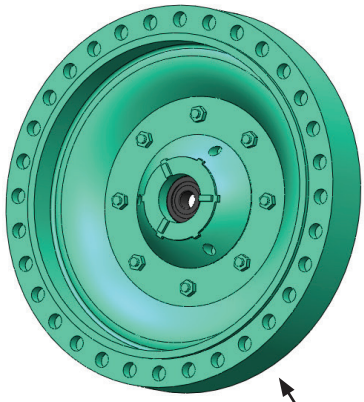

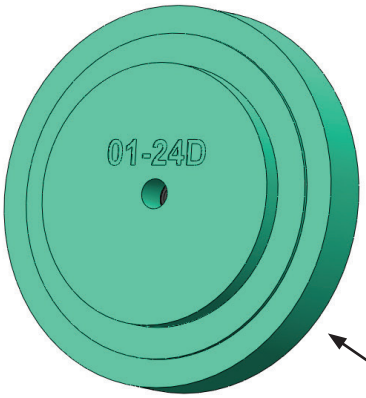

01-24A+B

01-24A+C+D

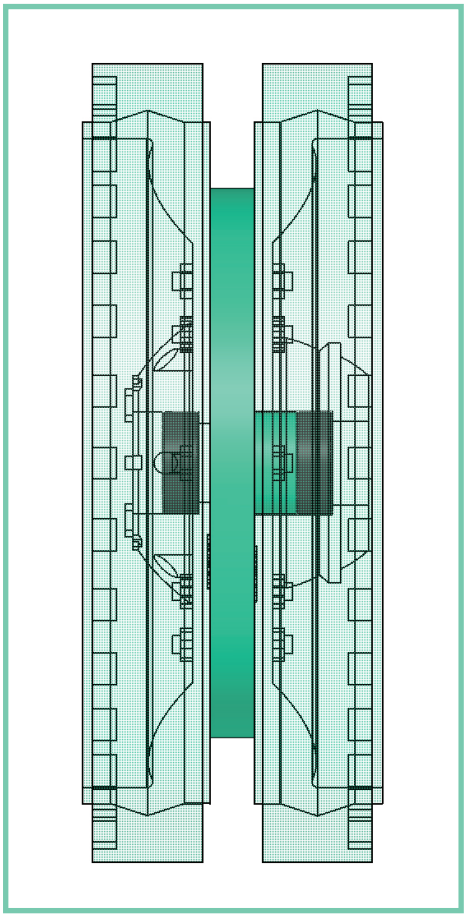

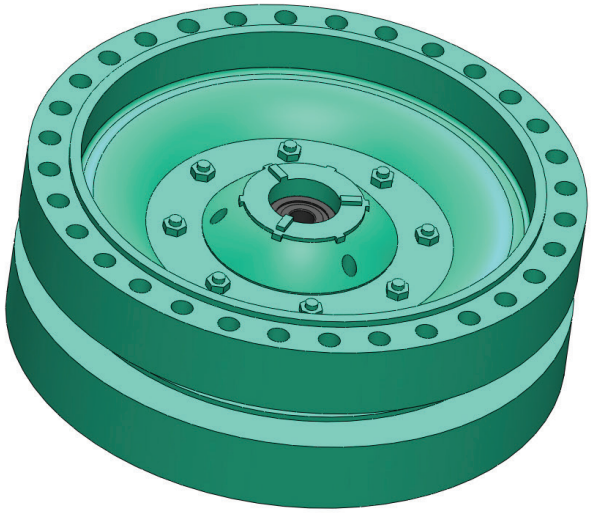

Finish the wheels.
Glue the assemblies of parts 01-24A + B and 01-24A + C + D together.
Align the parts carefully. You can use a M6 screw to help with centering.

Assembly 01 - Lower Hull

5x

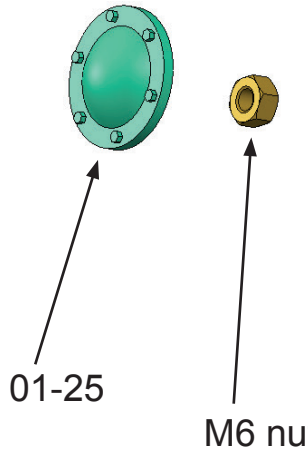



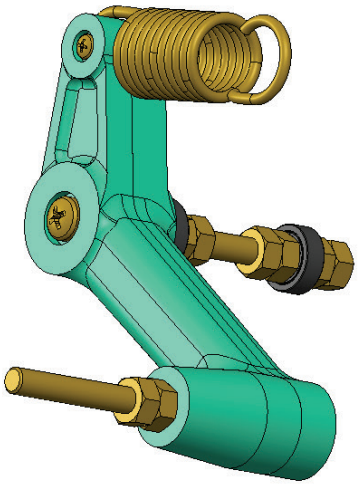

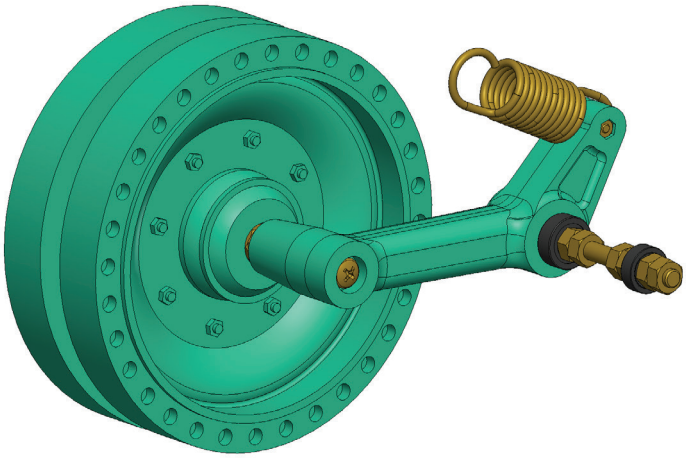

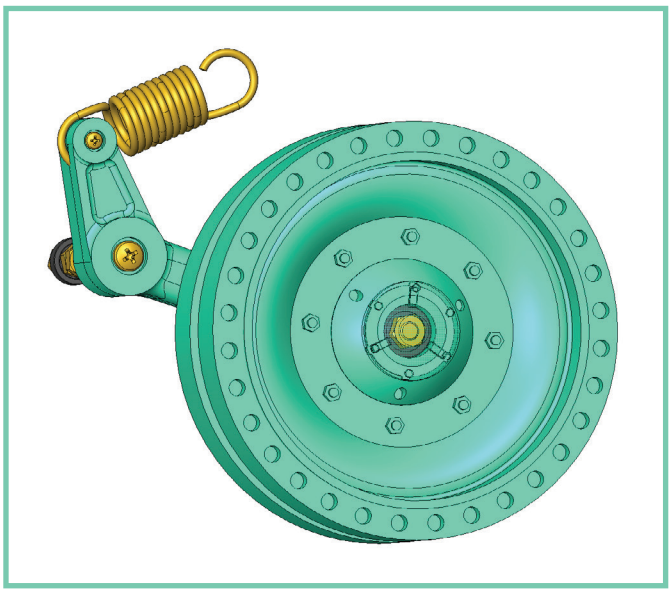

Prepare 5 wheels for the left side.
Attach parts assemblies 01-22A + B to parts 01-24A + B + C + D.
Secure with M6 nut. Use self-locking nuts.Alternatively, secure normal nut with glue.
It must not come loose under any circumstances.
Check everything and glue part 01-25.
We recommend using an adhesive that can be removed in the future.

Assembly 01 - Lower Hull

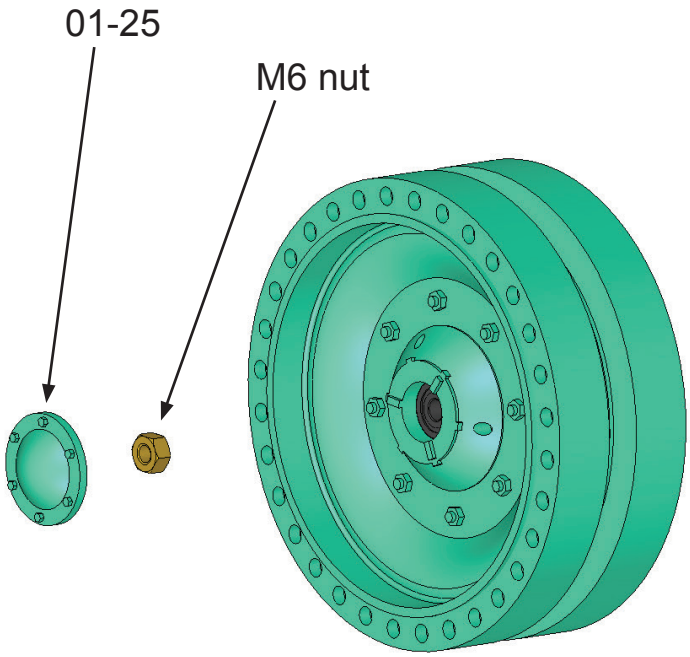

5x

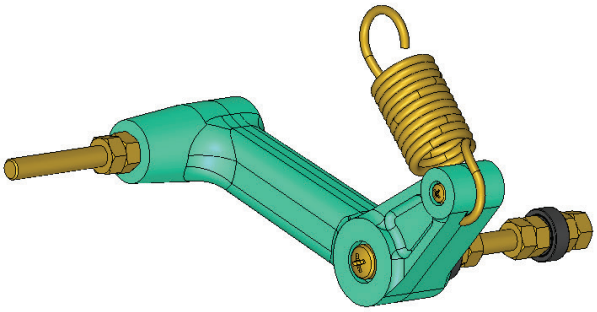

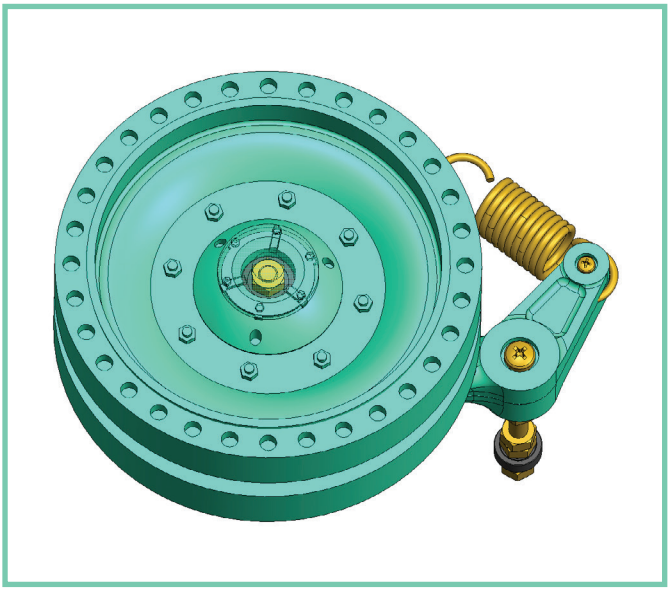

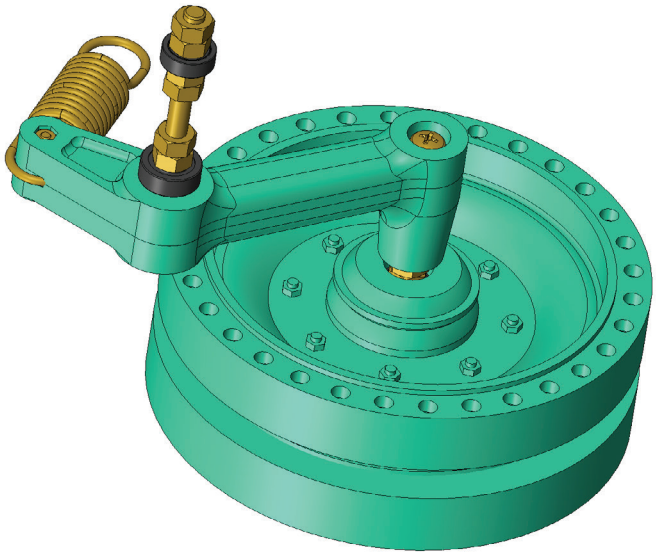

Prepare 5 wheels for the right side.
Attach parts assemblies 01-23A + B to parts 01-24A + B + C + D.
Secure with M6 nut. Use self-locking nuts.Alternatively, secure normal nut with glue.
It must not come loose under any circumstances.
Check everything and glue part 01-25.
We recommend using an adhesive that can be removed in the future.

Assembly 01 - Lower Hull

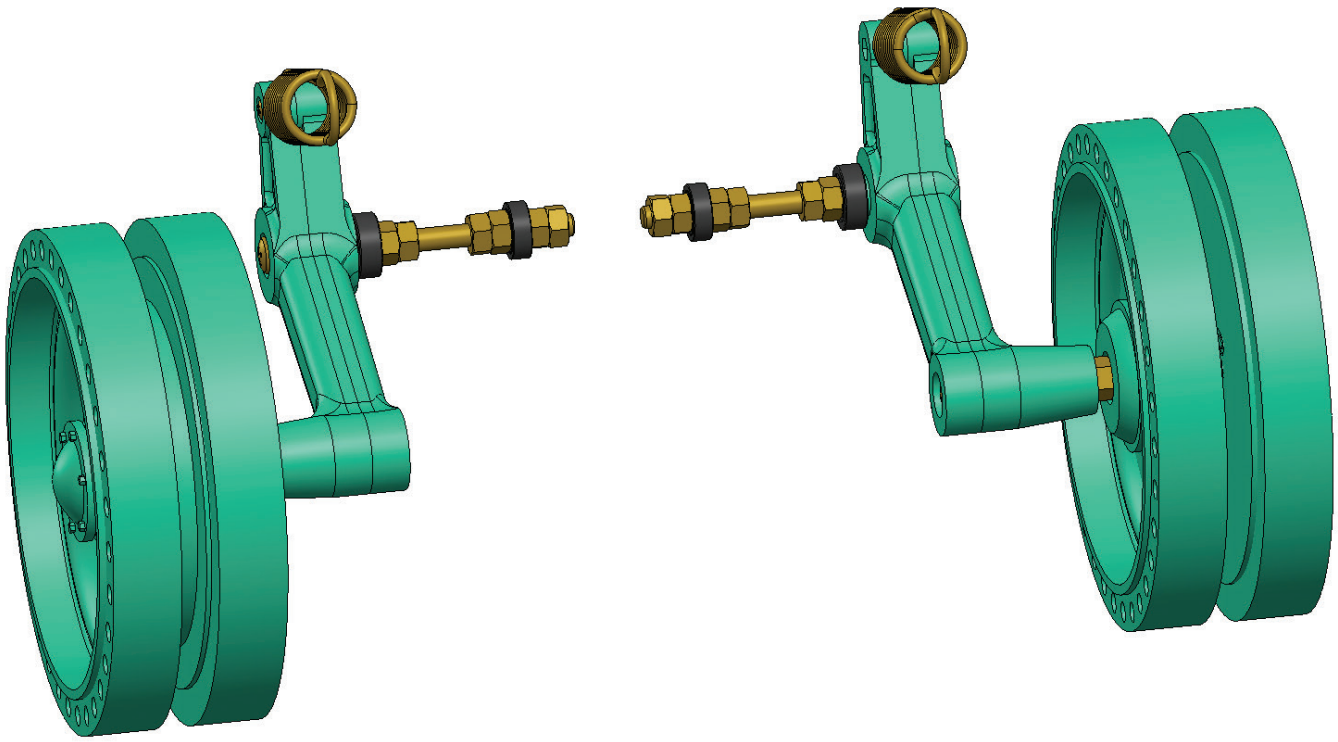

View of the finished wheels.

Assembly 01 - Lower Hull

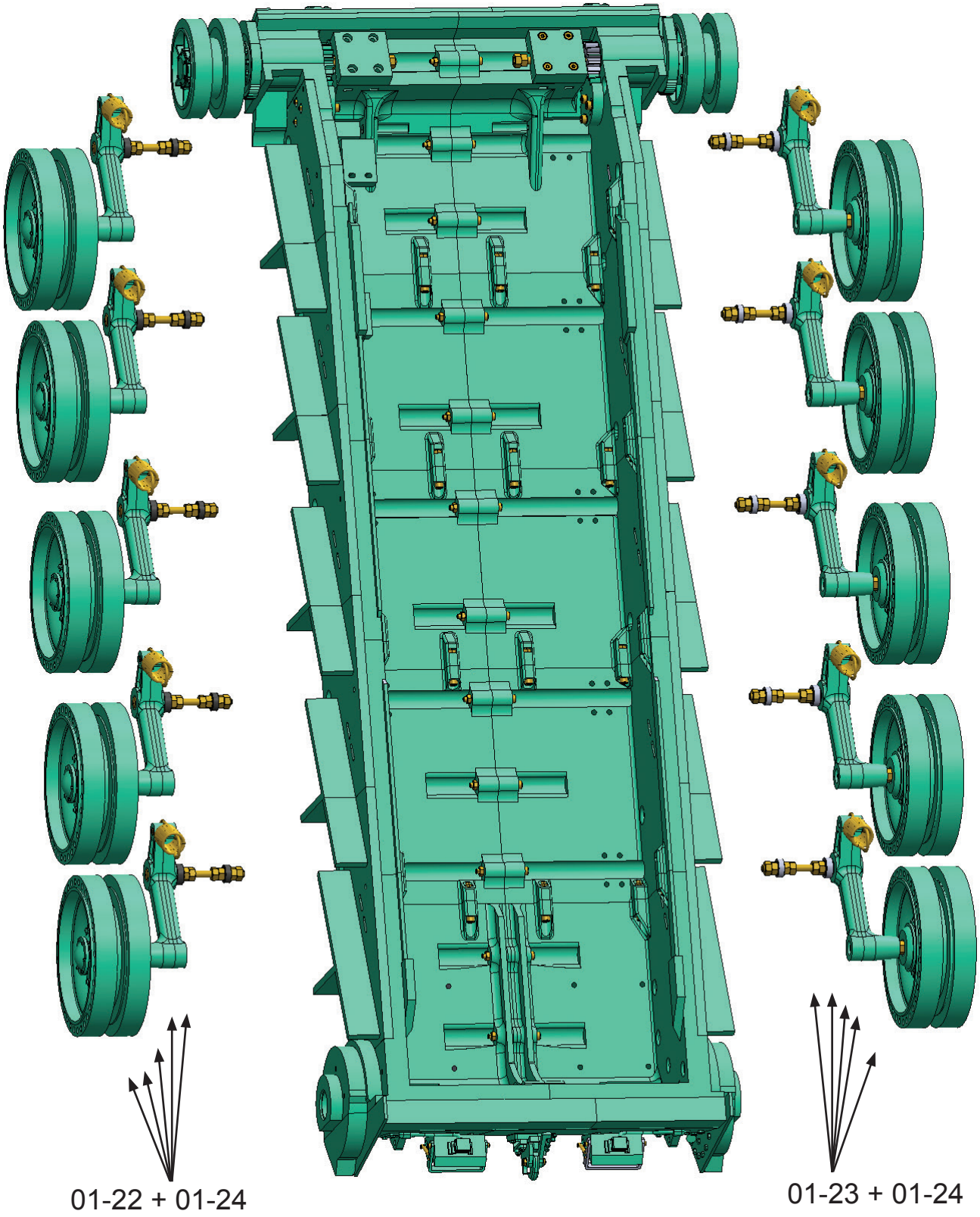

Insert the prepared wheels into the hull.

Assembly 01 - Lower Hull

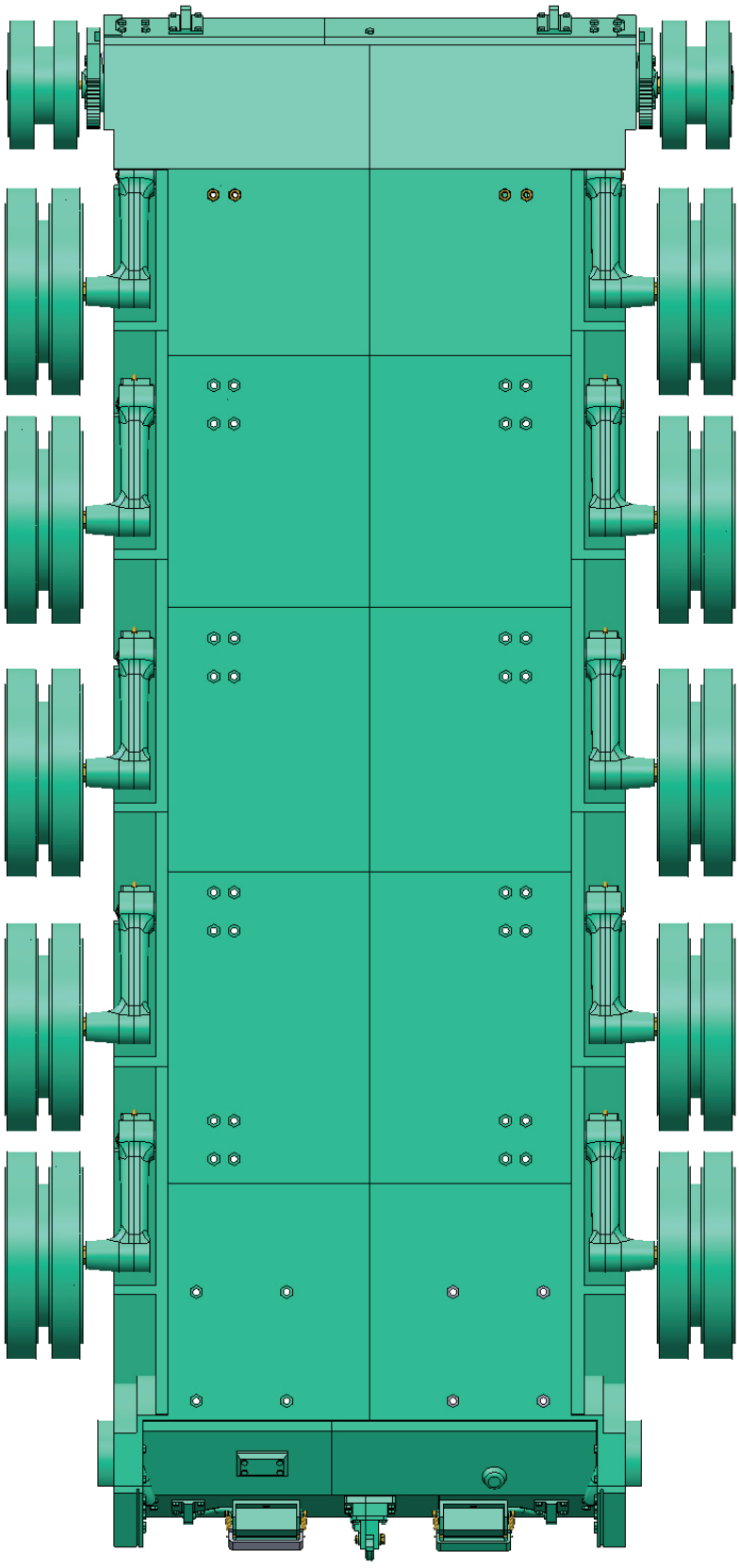

View of the installed wheels - bottom side.

Assembly 01 - Lower Hull

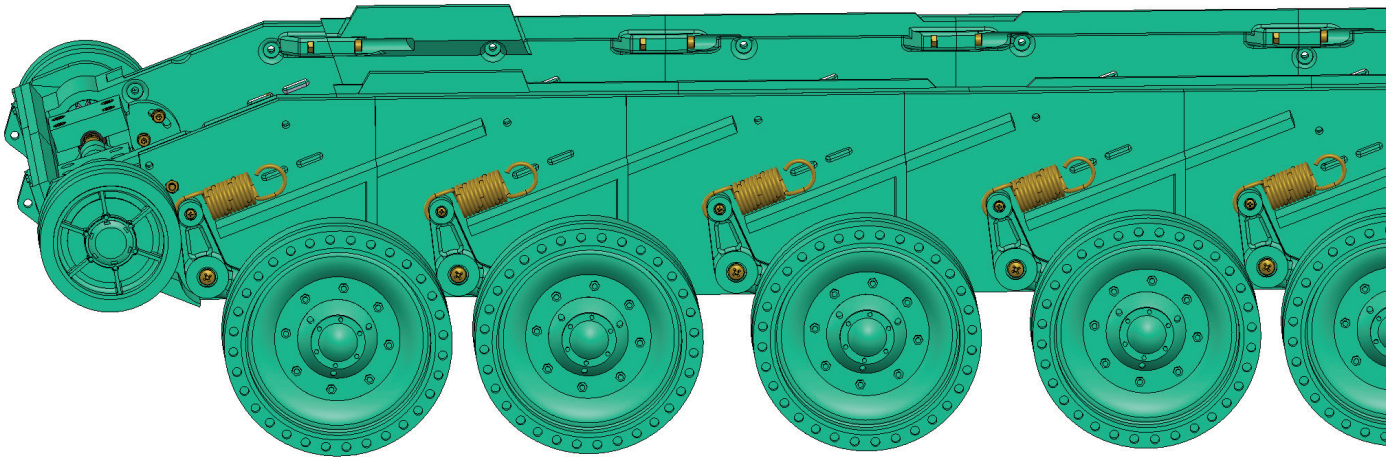

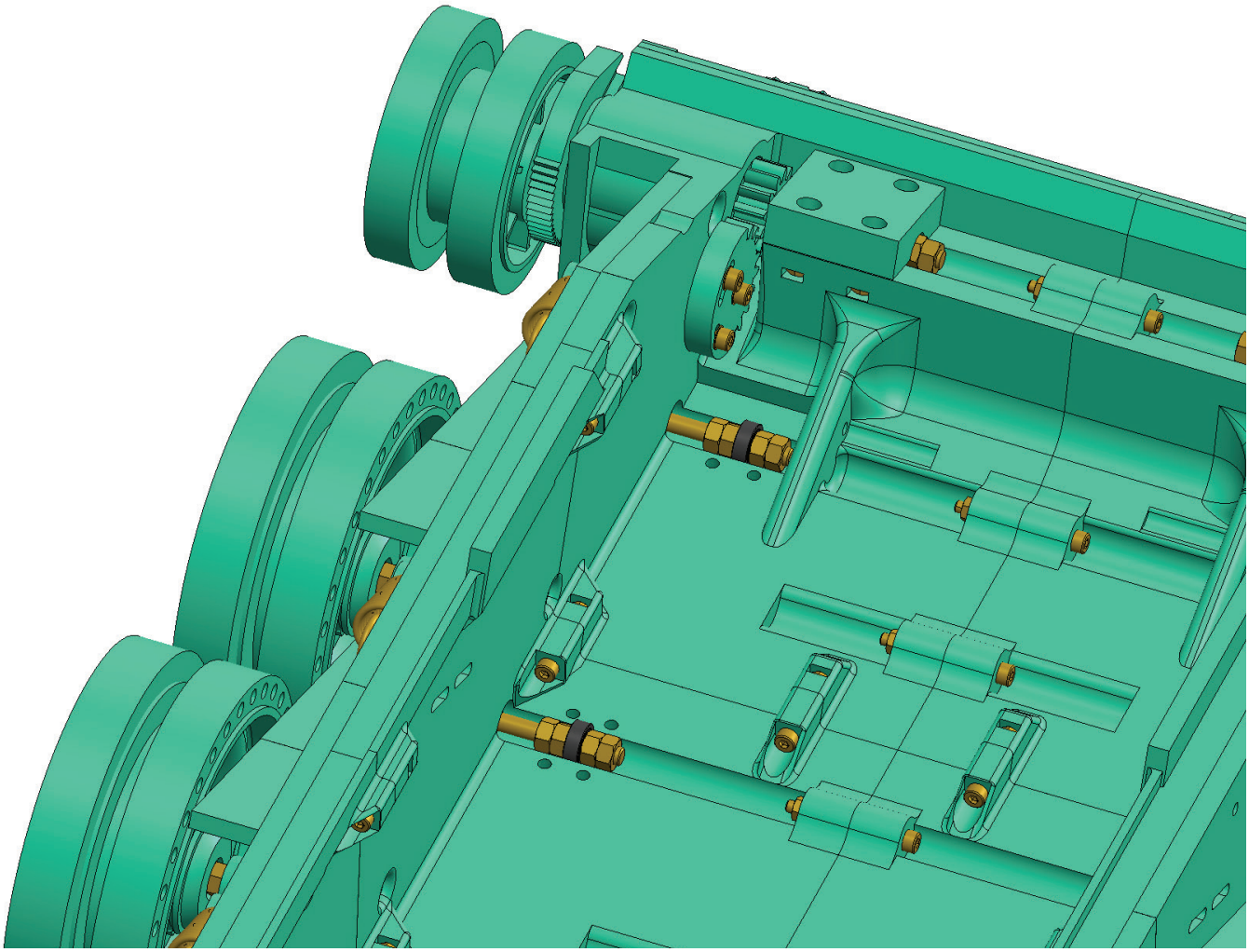

Additional auxiliary views for wheel installation.

Assembly 01 - Lower Hull

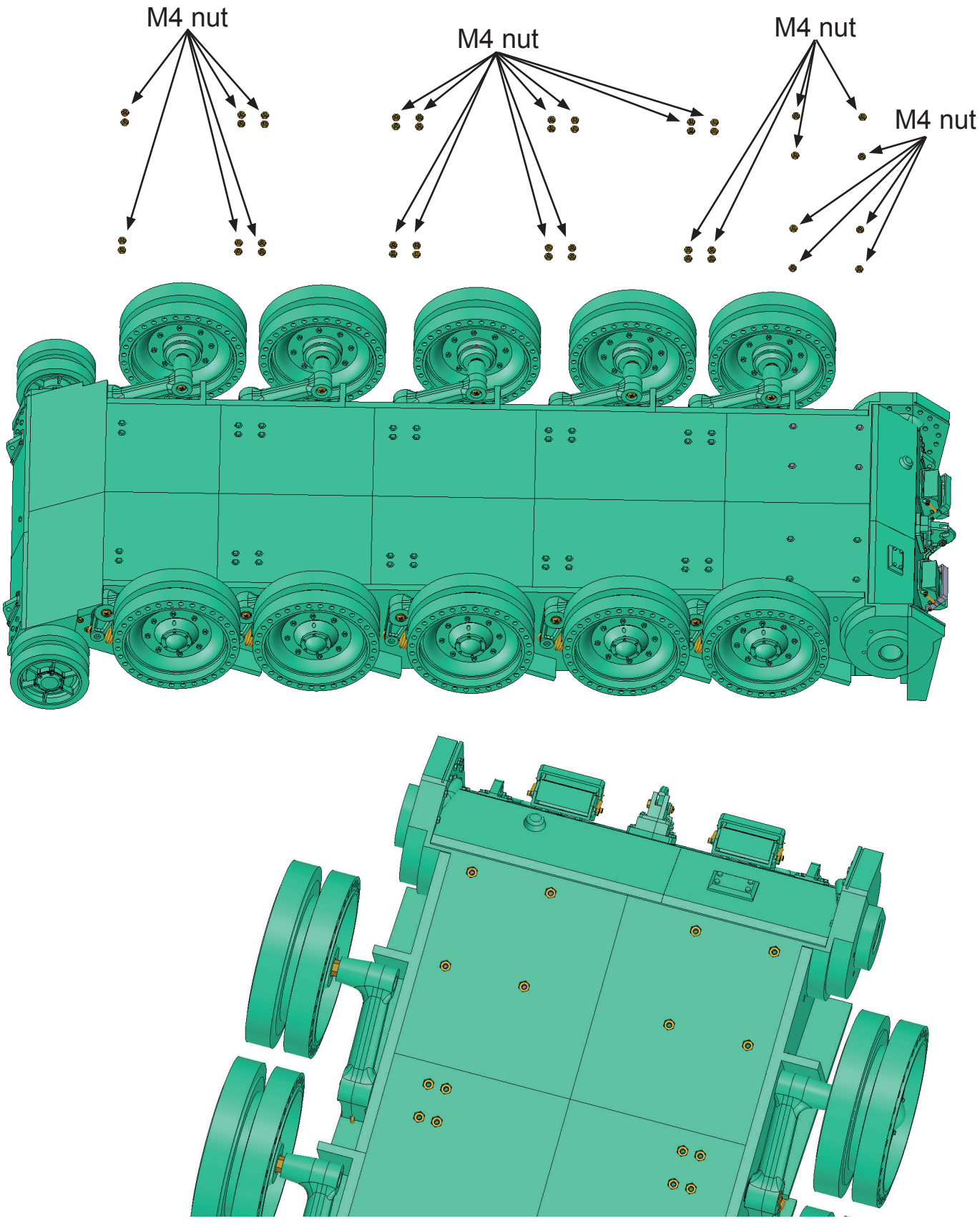

Insert 44 M4 nuts to secure the wheels (and motors in the future).

Assembly 01 - Lower Hull

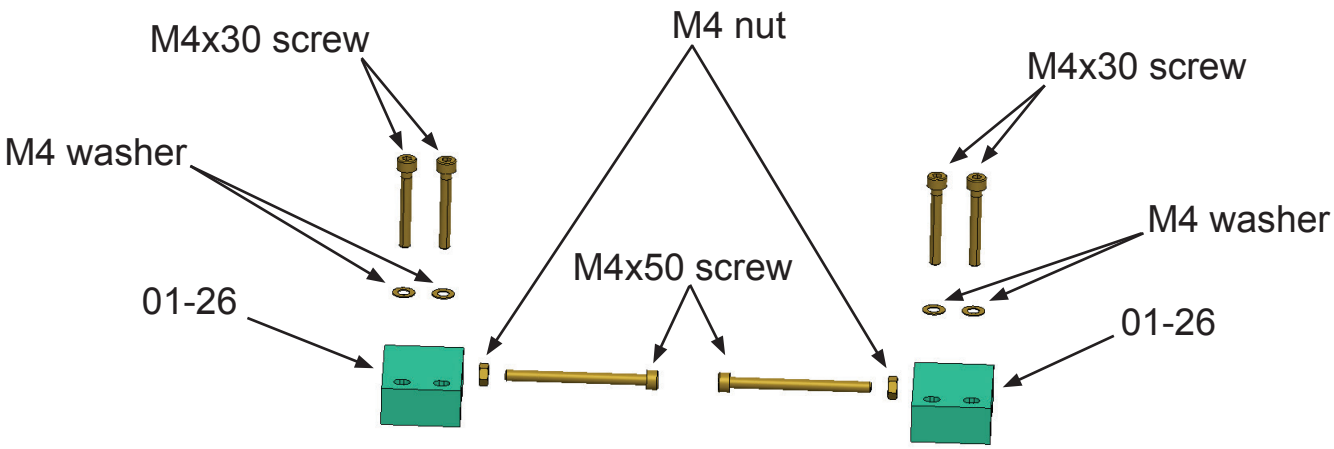

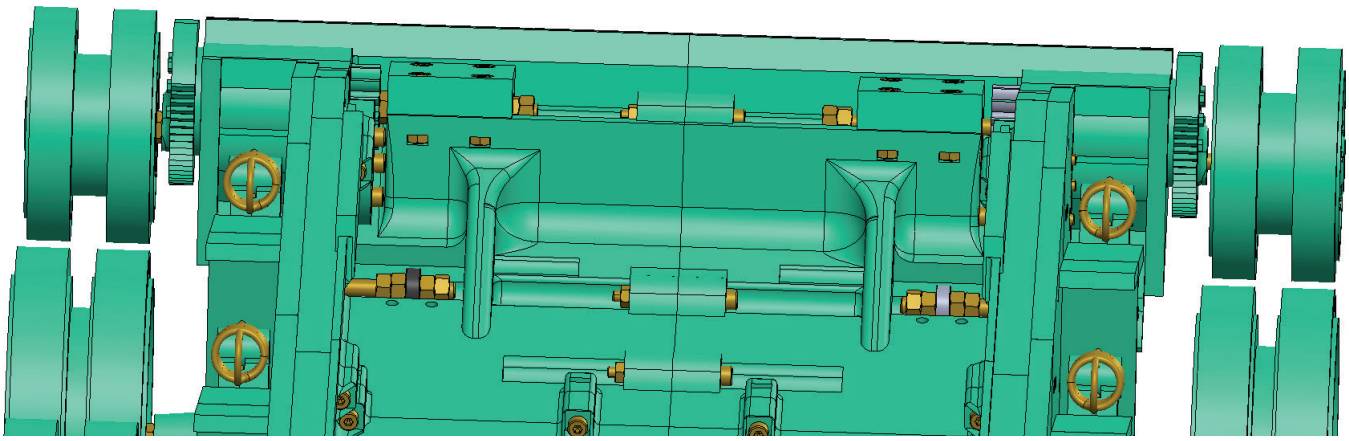

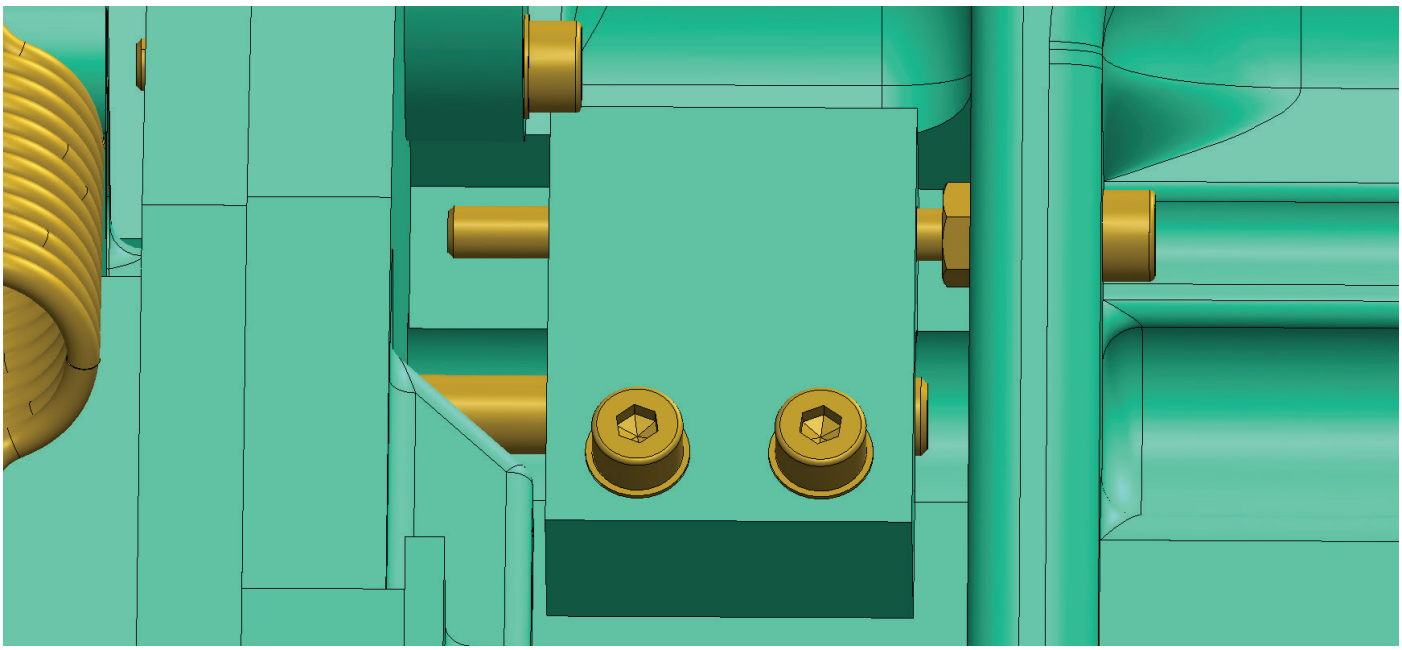

A pair of drive wheels, which are closest to the front of the tank, must be secured with parts 01-26.Use four M4x30mm screws and washers. The wheels can be additionally secured with two M4x50 screws and M4 nuts.

Assembly 01 - Lower Hull

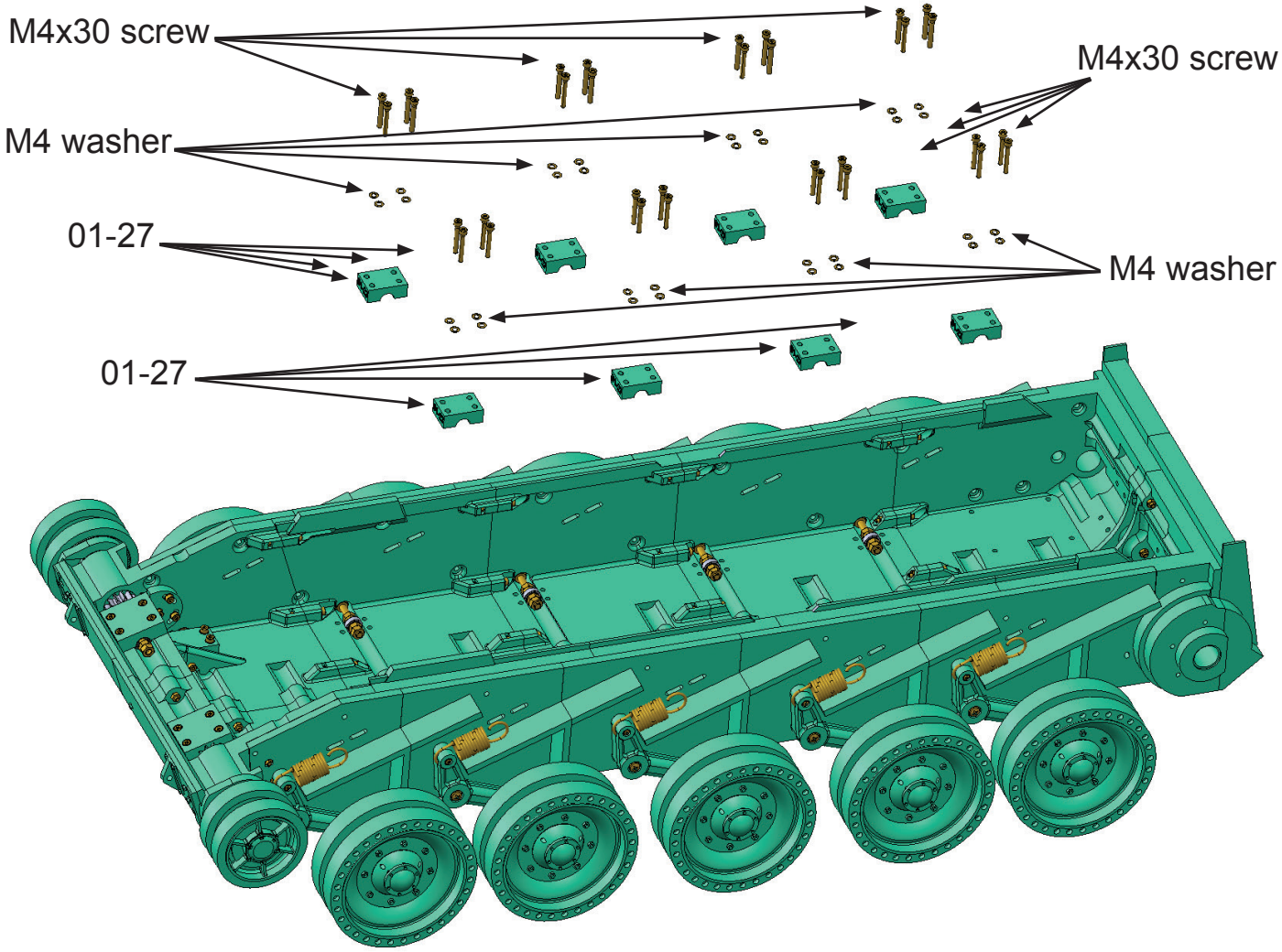

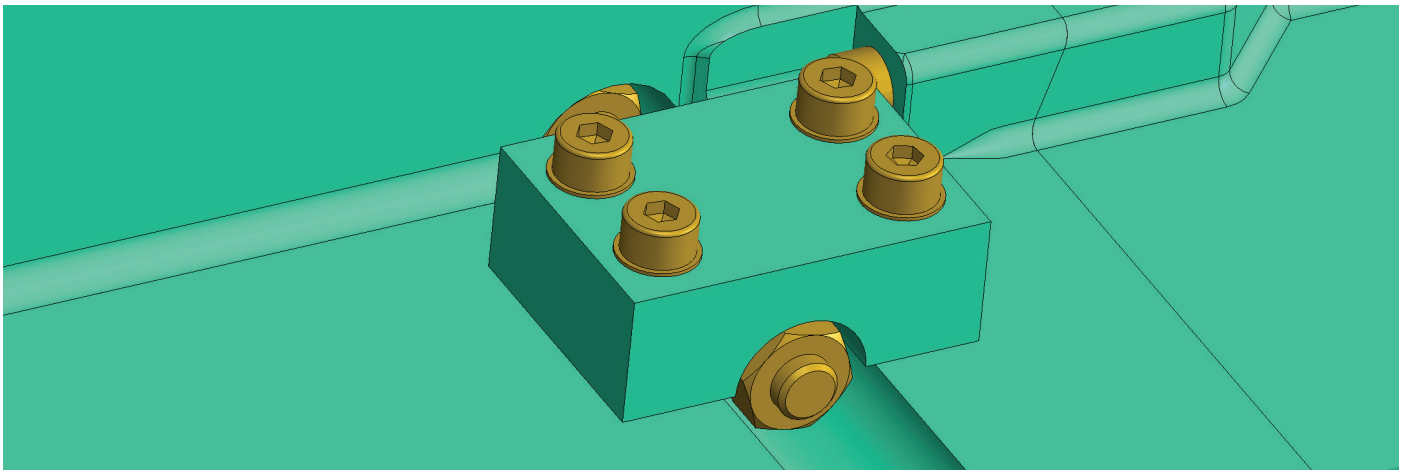

Secure the other wheels. You will need 8 parts labelled 01-27.
Use 32 M4x30mm screws and washers.

Assembly 01 - Lower Hull

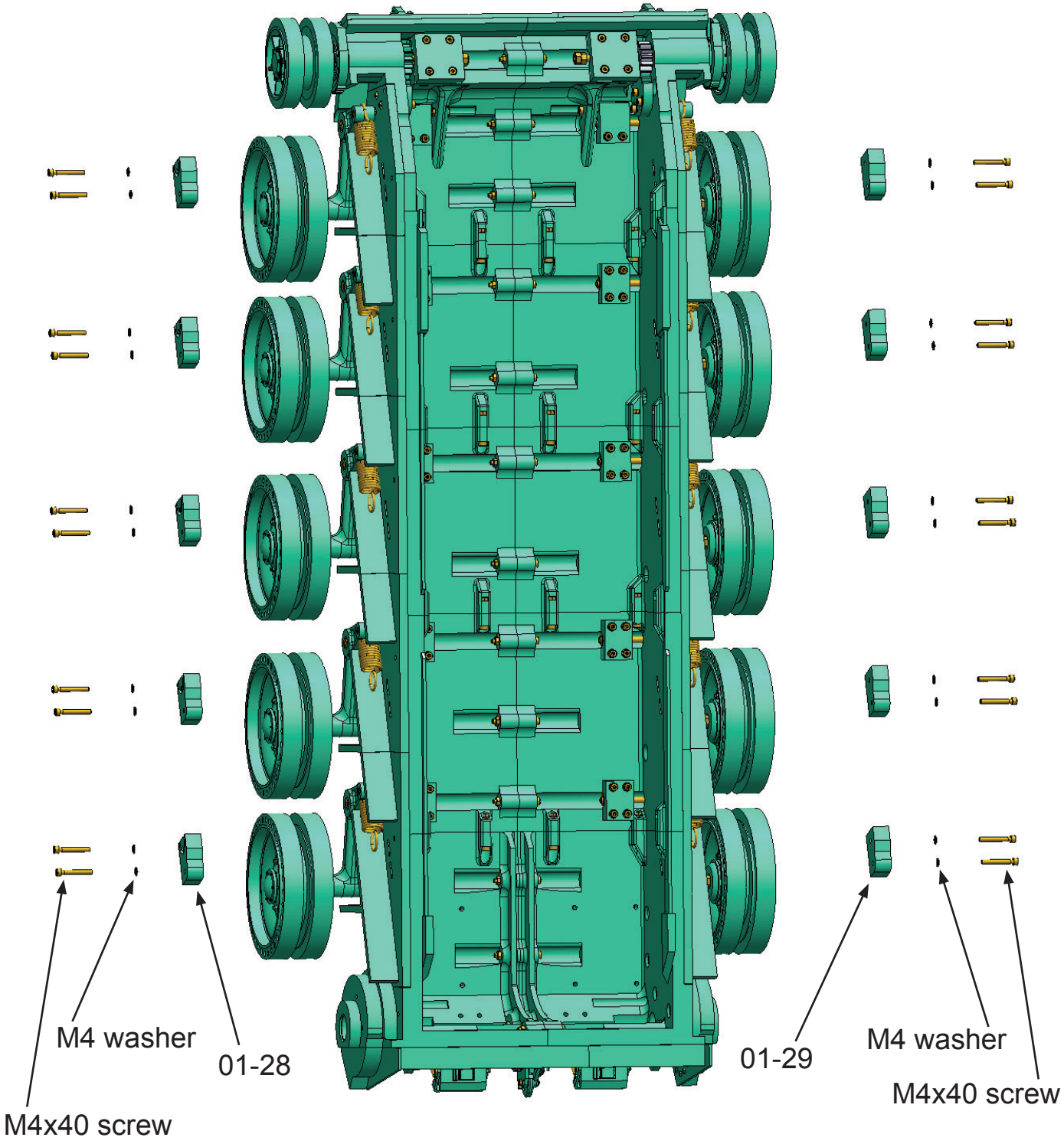

Secure the springs with parts 01-28 (5x) and 01-29 (5x).
You will need 20 M4x40mm screws and 20 M4 washers.

Assembly 01 - Lower Hull

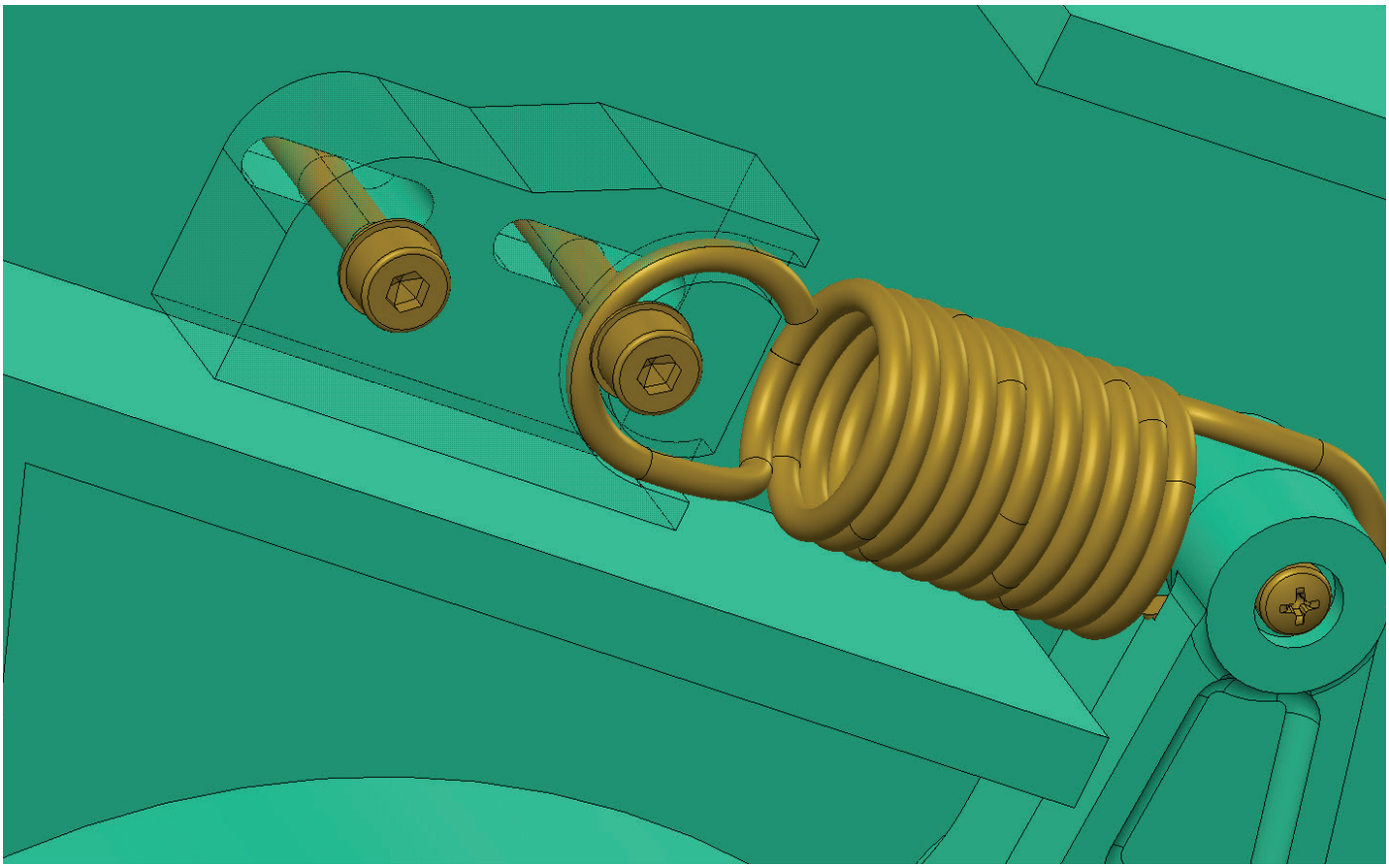

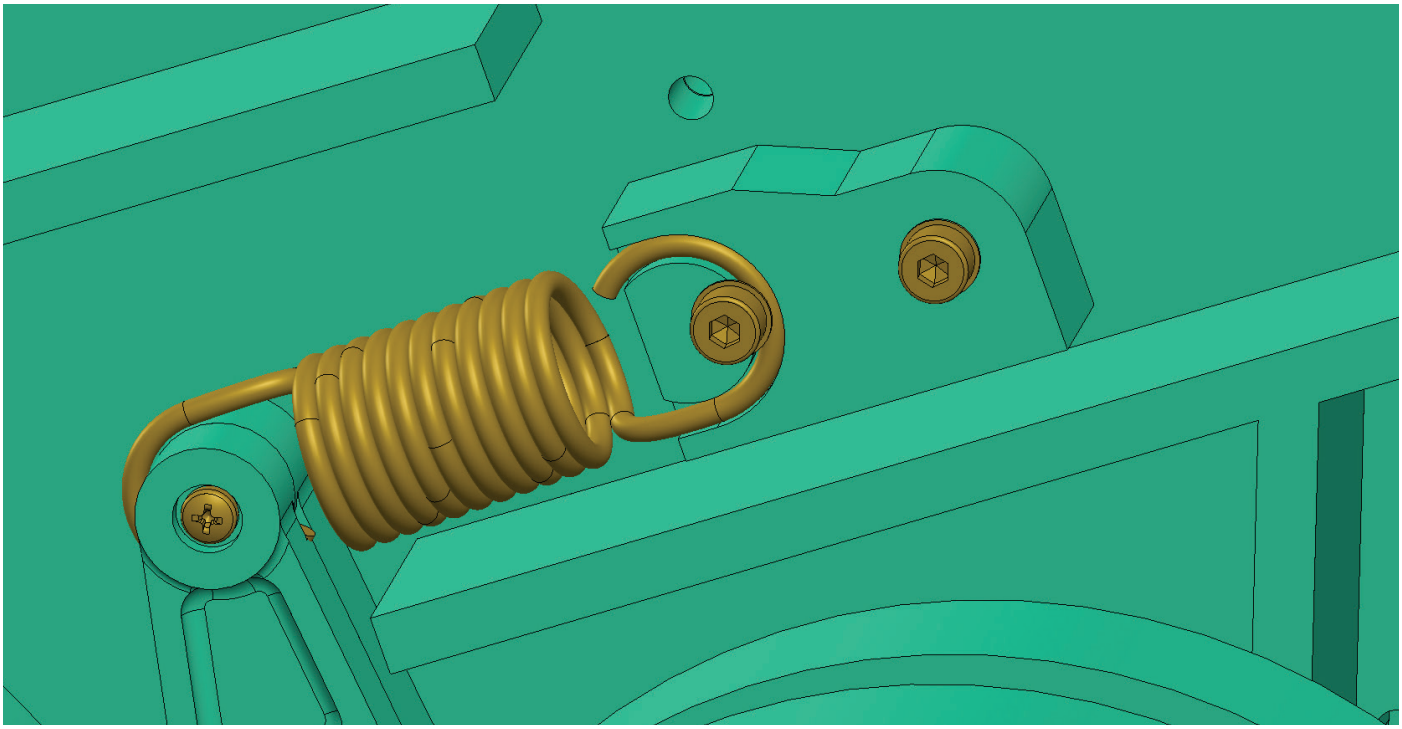

Auxiliary views for installation of parts 01-28 and 01-29.

Assembly 01 - Lower Hull

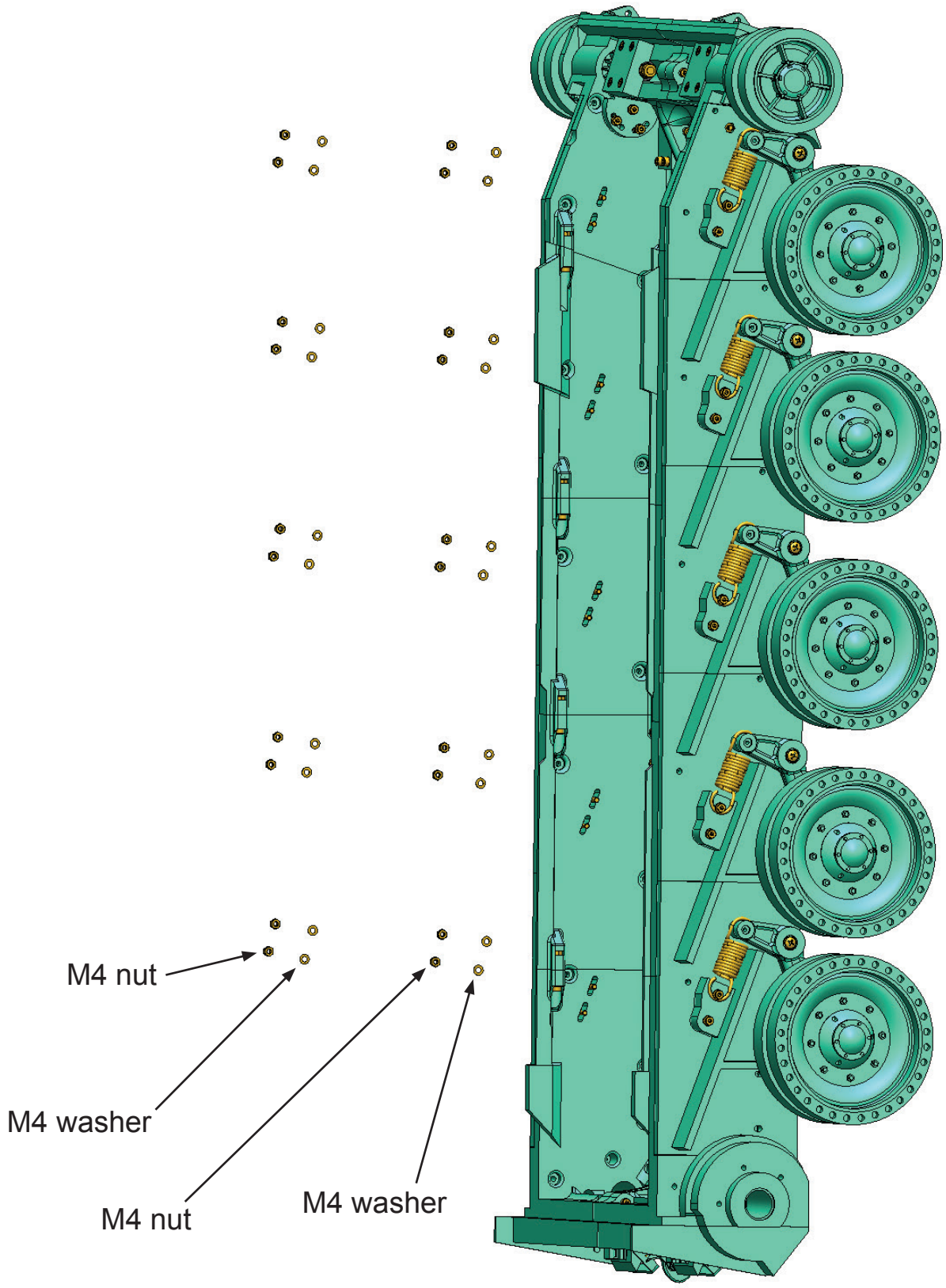

Secure parts 01-28 and 01-29 on the other side with 20 M4 nuts and 20 washers.
You can move the parts in the grooves to adjust the suspension springs.

Assembly 01 - Lower Hull

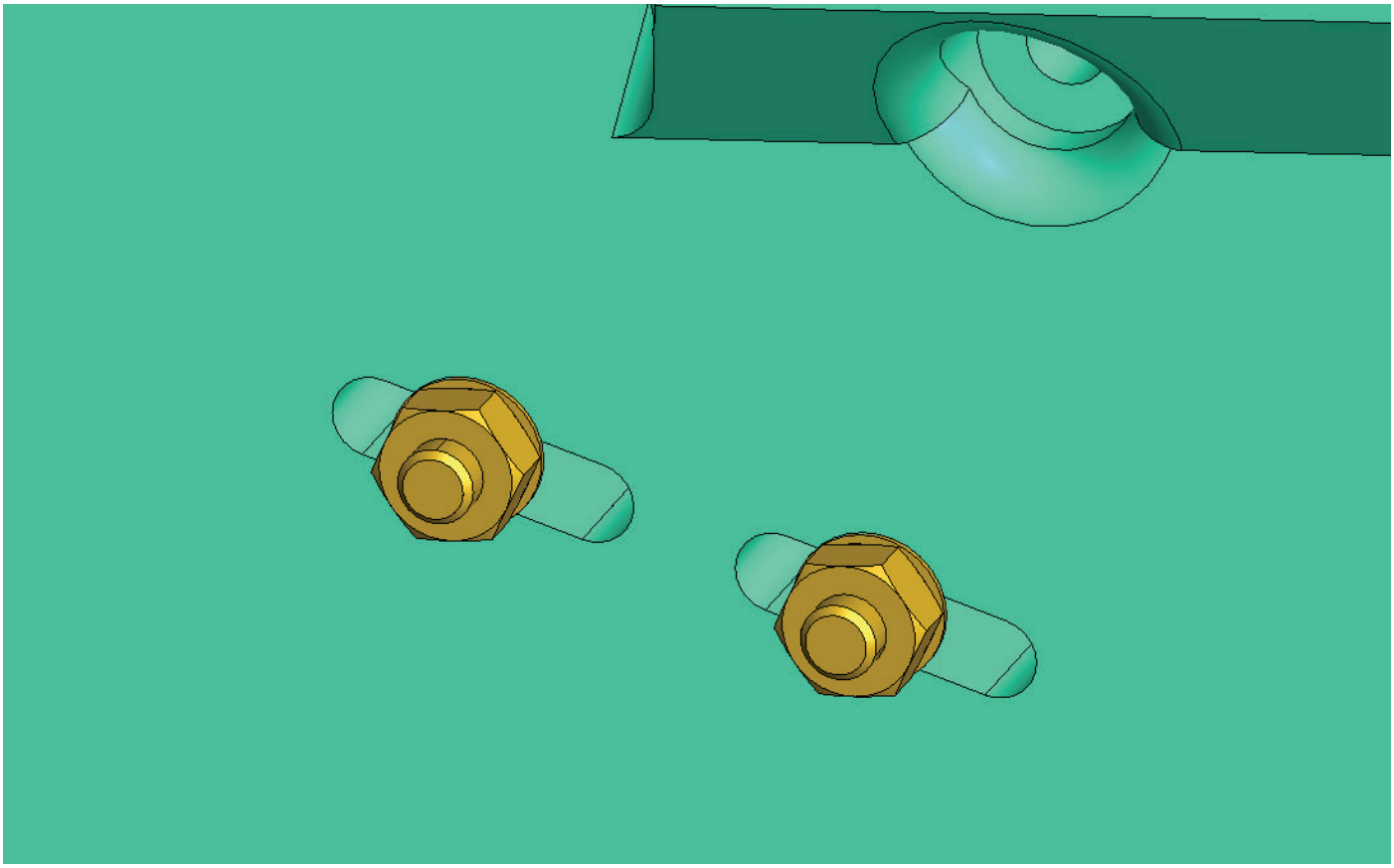

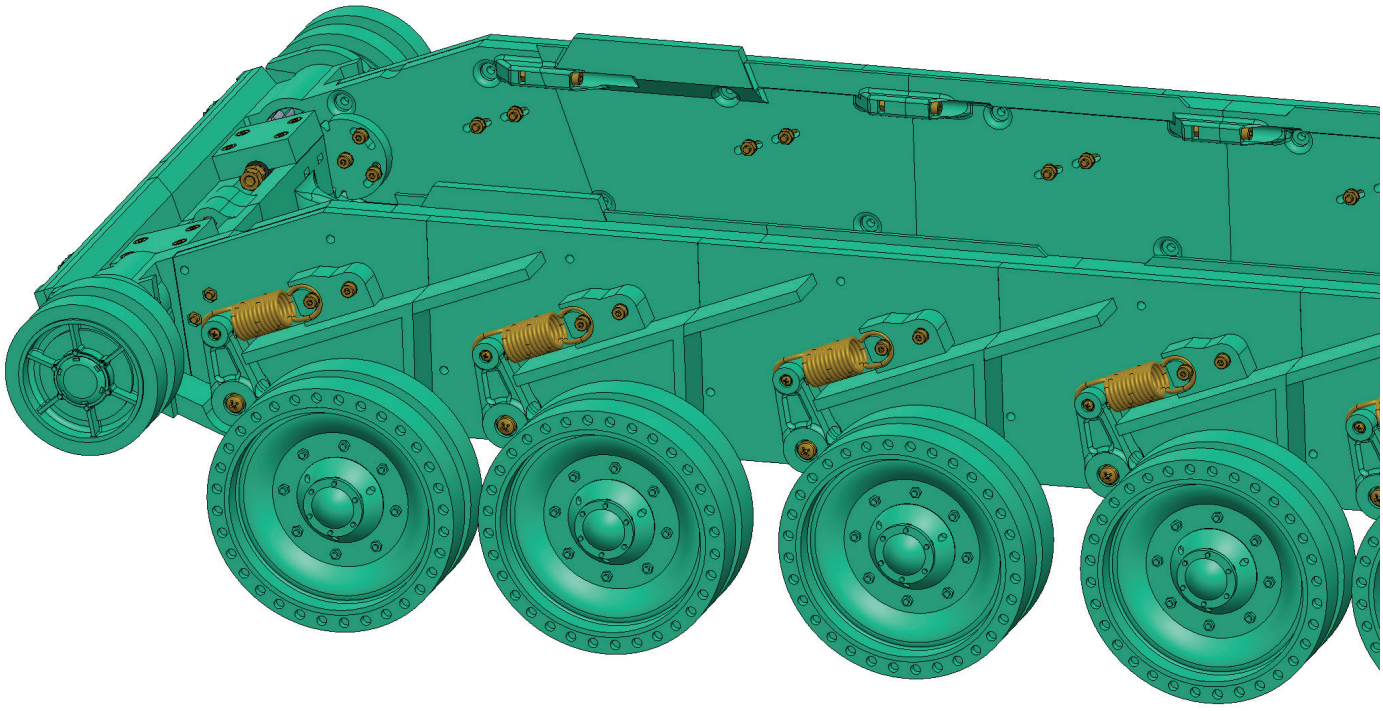

Auxiliary views for installing nuts.

Assembly 01 - Lower Hull

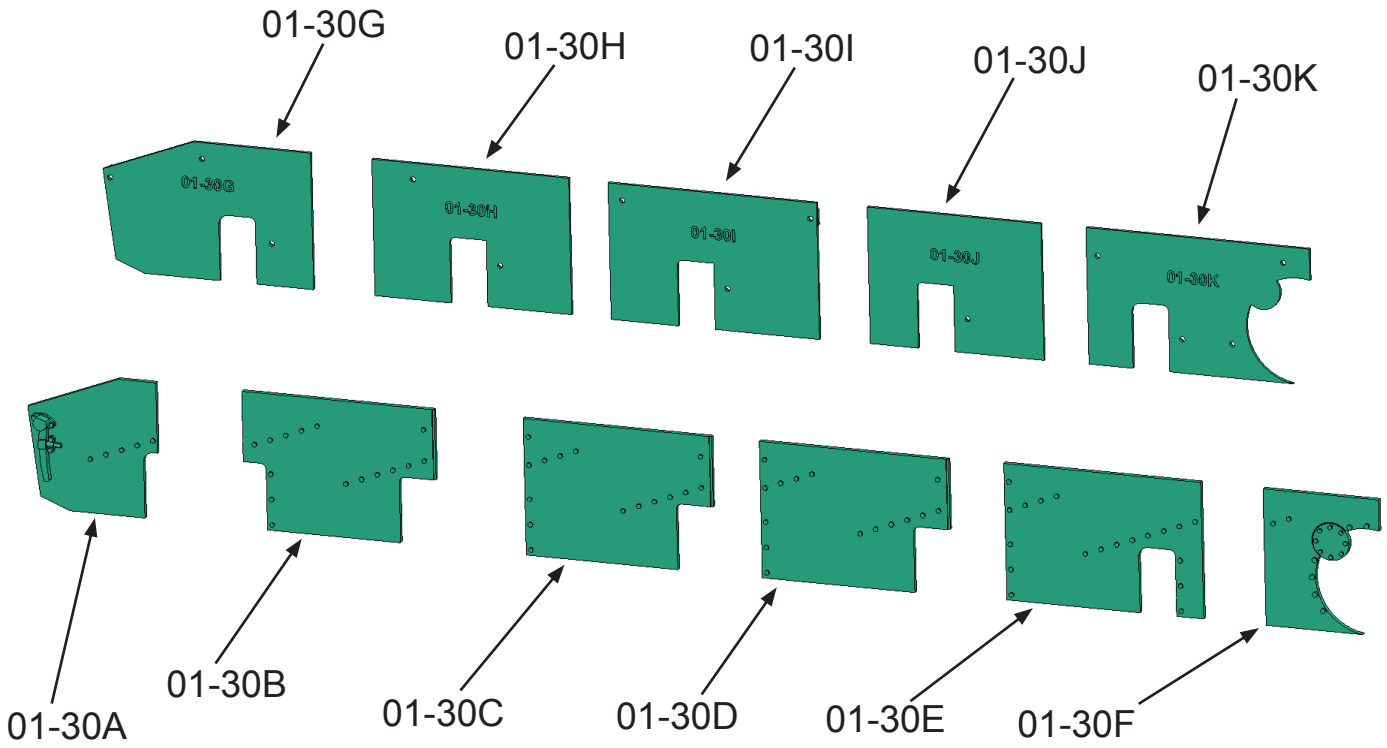

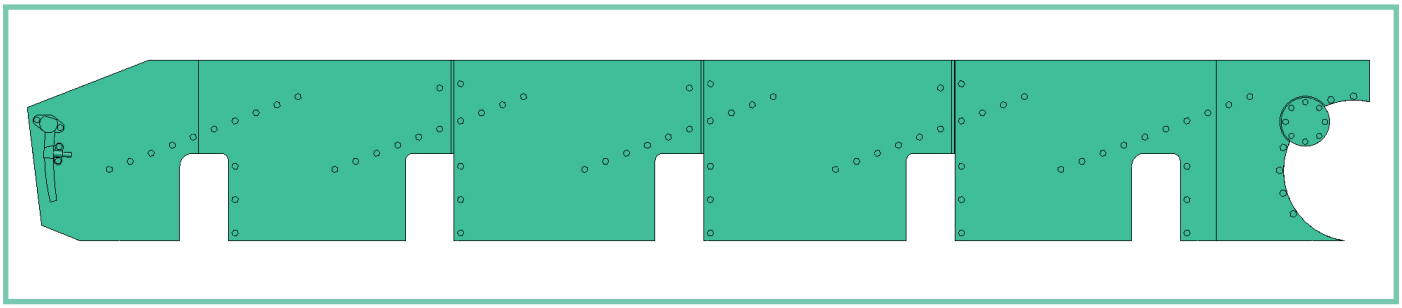

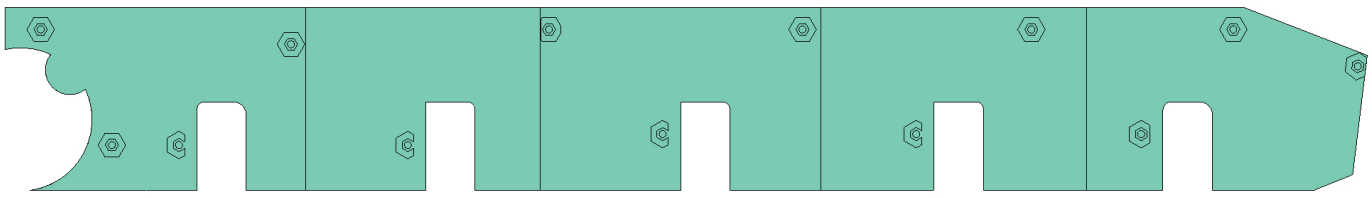

Glue parts 01-30A to 01-30K together.
If you have a big enough printer, you can print combined parts.

Assembly 01 - Lower Hull

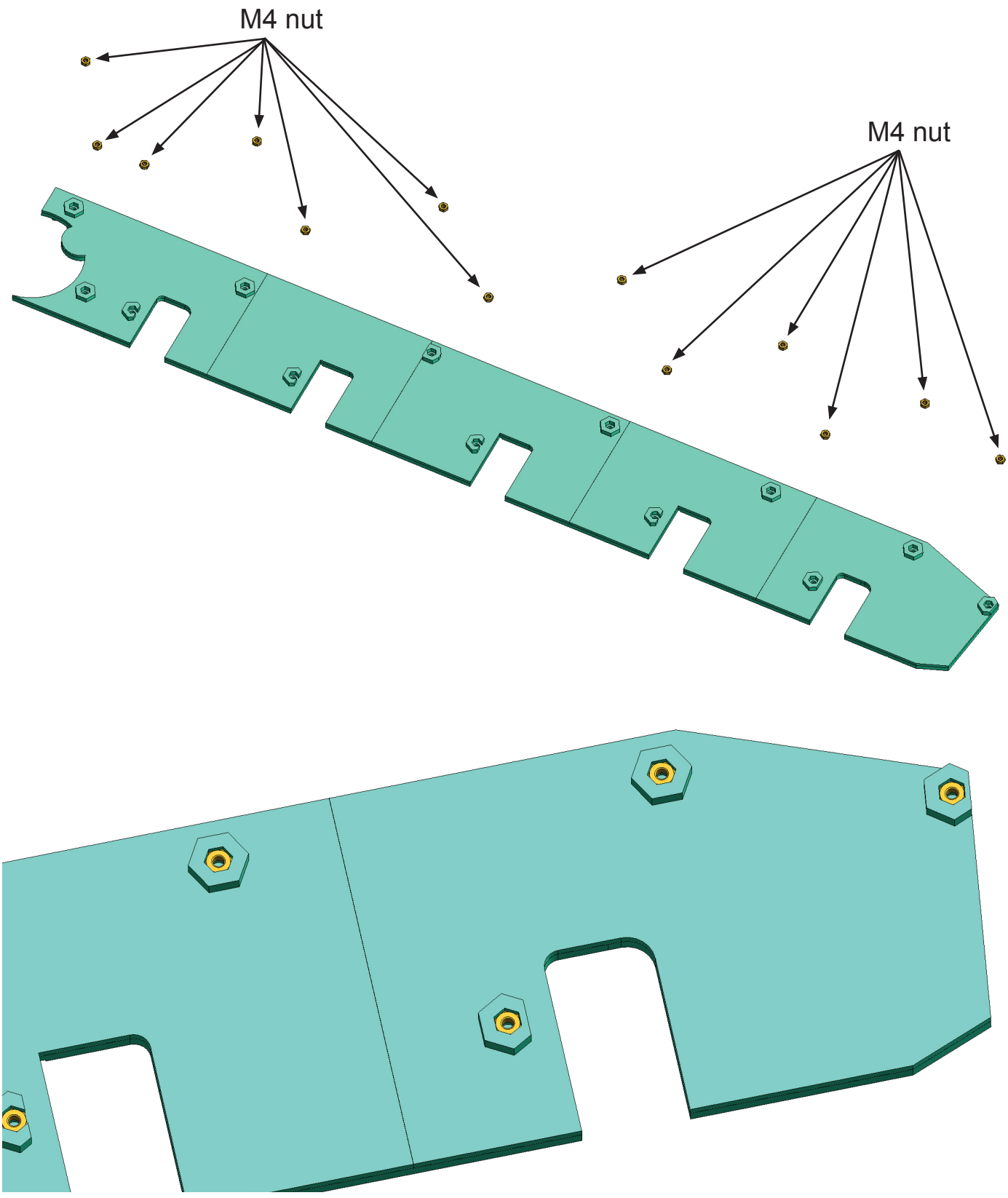

Glue 13 M4 nuts. The nuts must be fastened so that they do not fall out.

Assembly 01 - Lower Hull

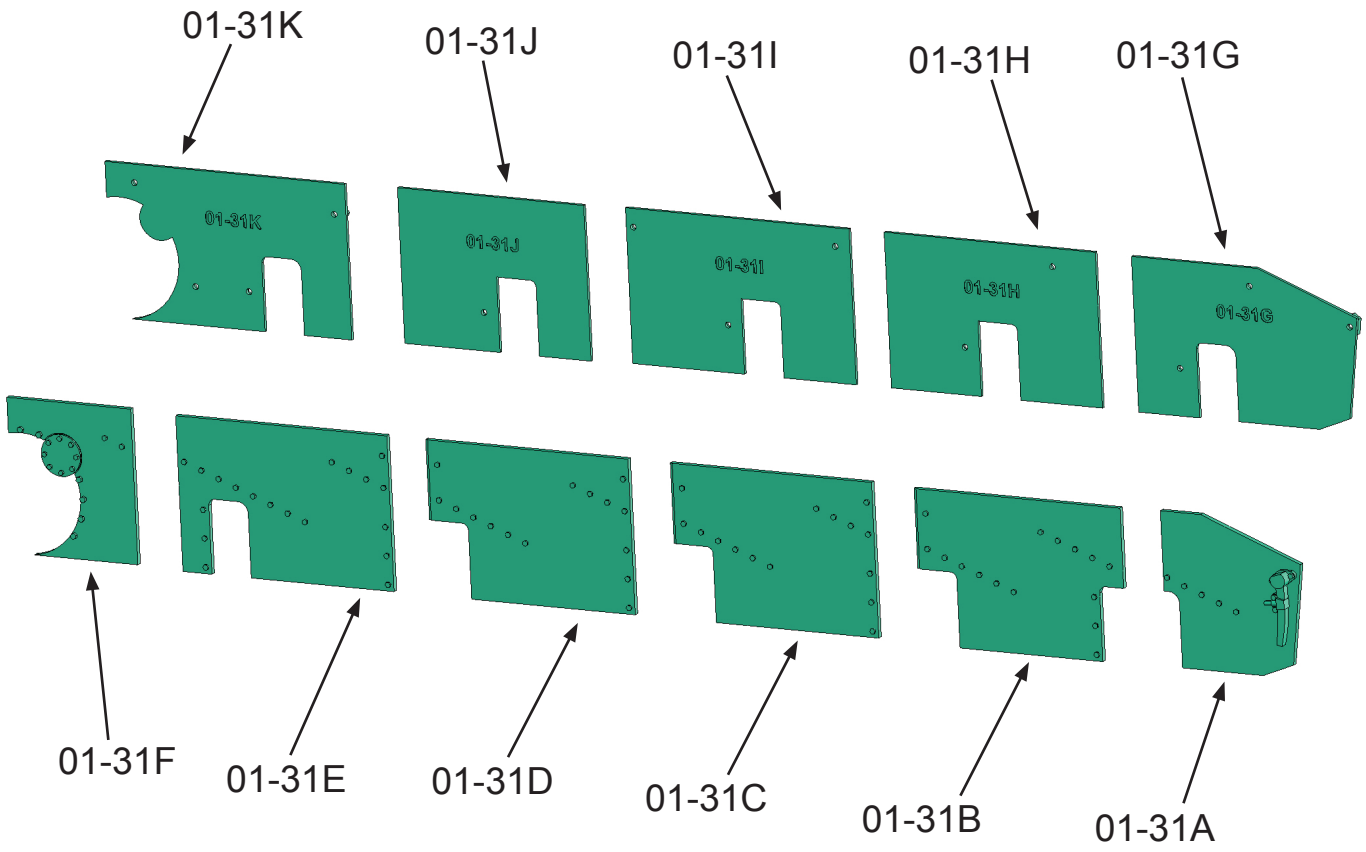

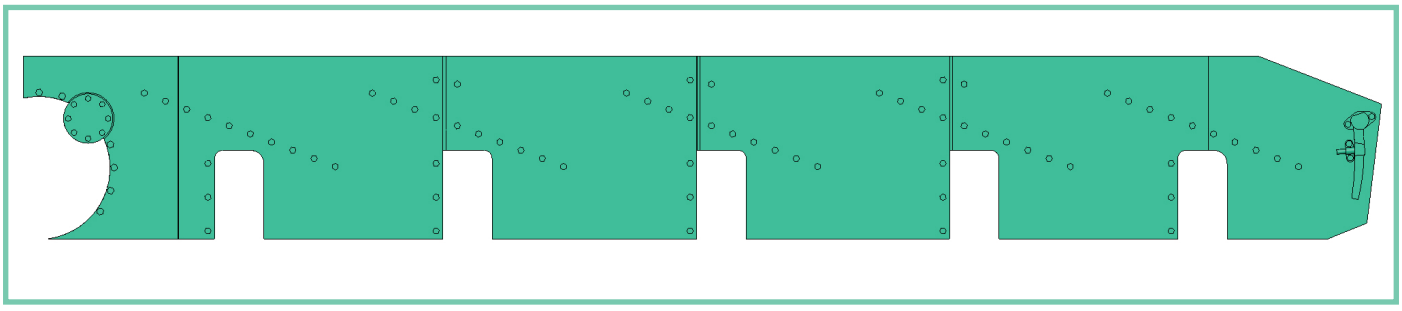

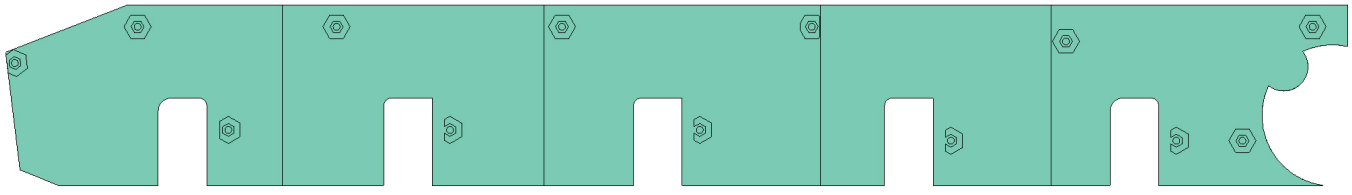

Glue parts 01-31A to 01-31K together.
If you have a big enough printer, you can print combined parts.

Assembly 01 - Lower Hull

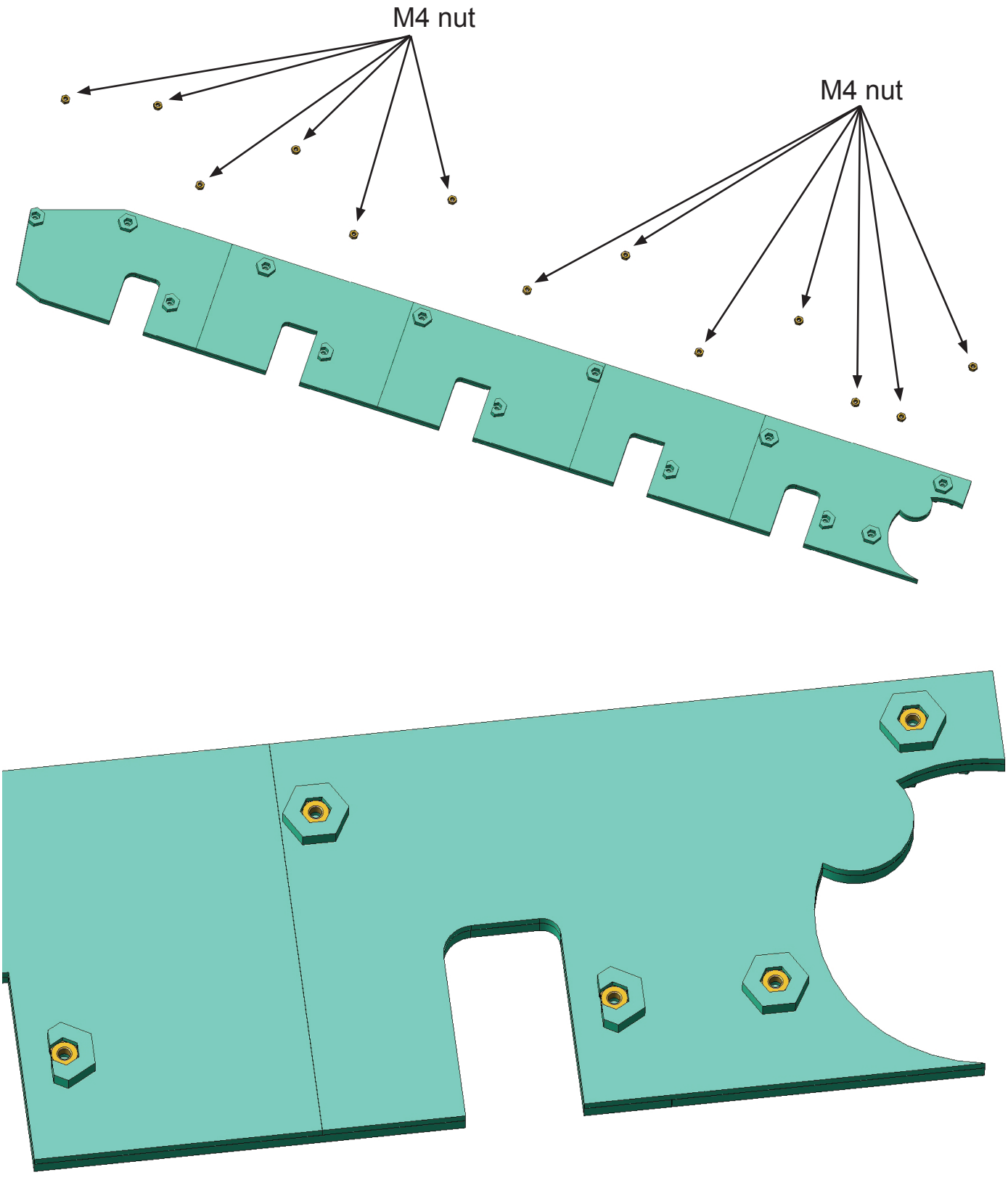

Glue 13 M4 nuts. The nuts must be fastened so that they do not fall out.

Assembly 01 - Lower Hull

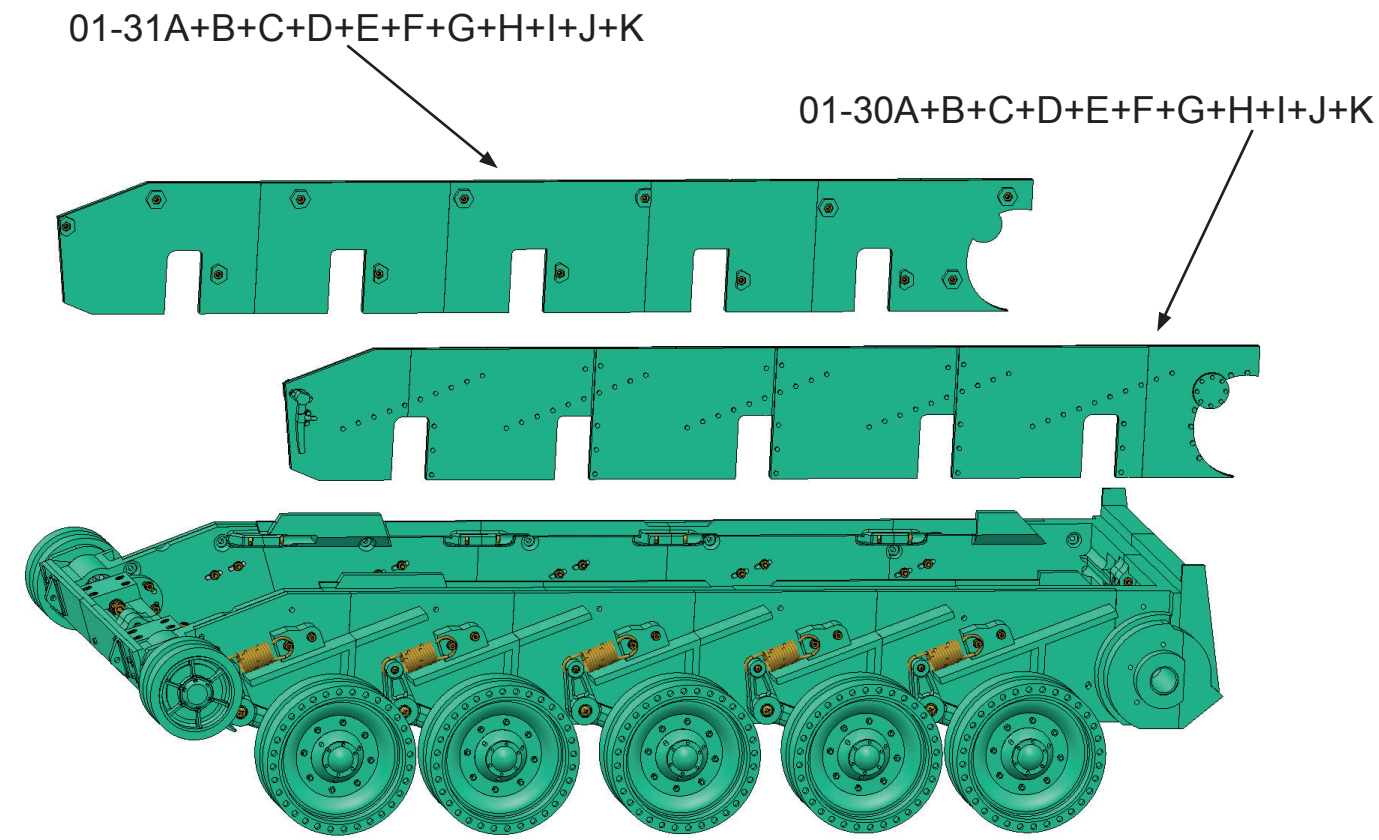

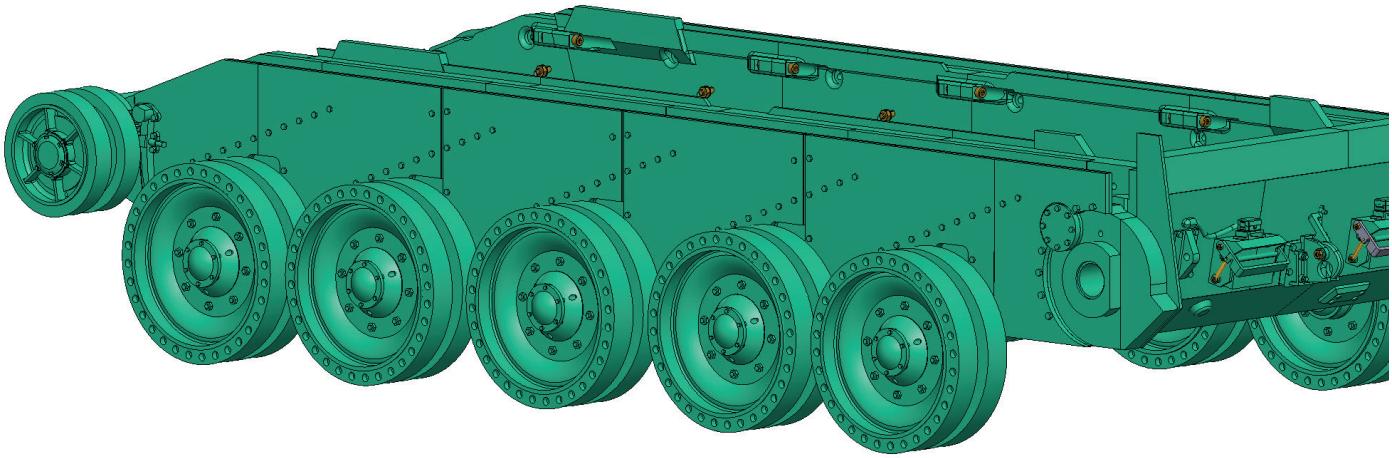

Install the chassis side armor - parts assemblies 01-30 and 01-31.
Do not glue these parts to the tank!

Assembly 01 - Lower Hull

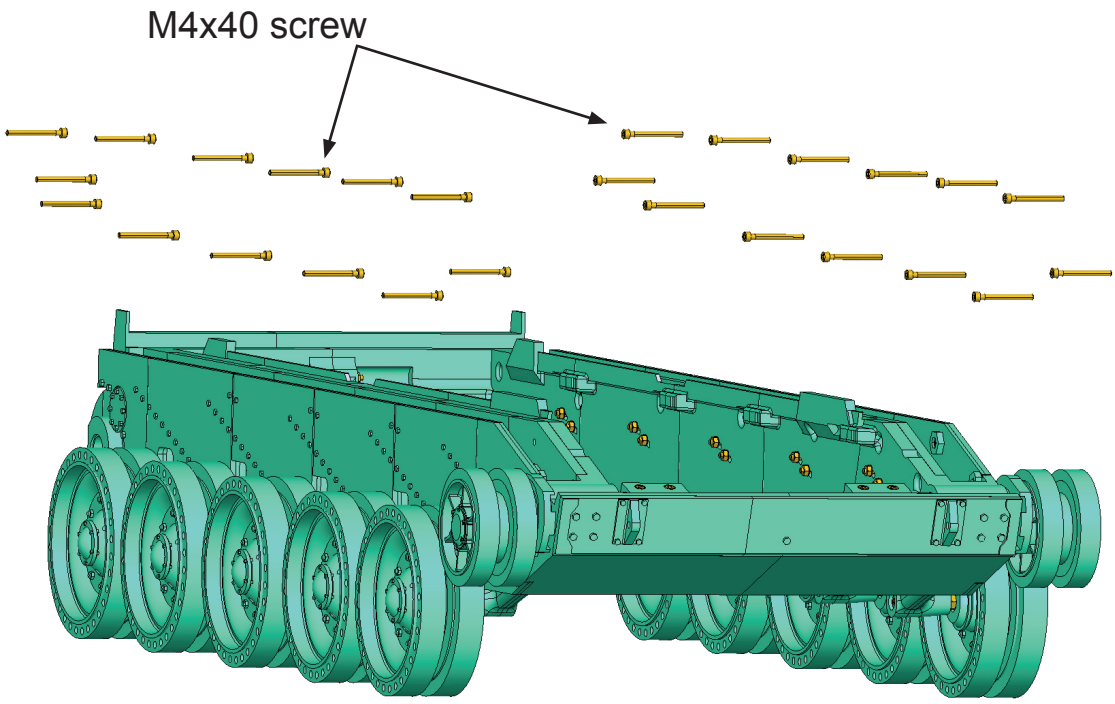

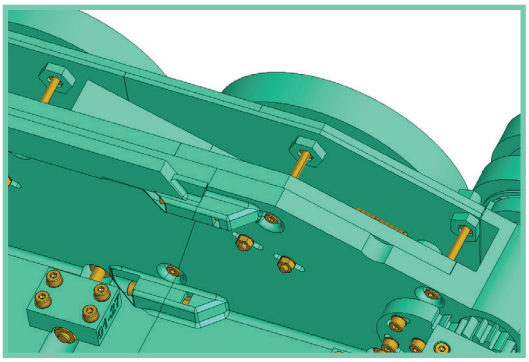

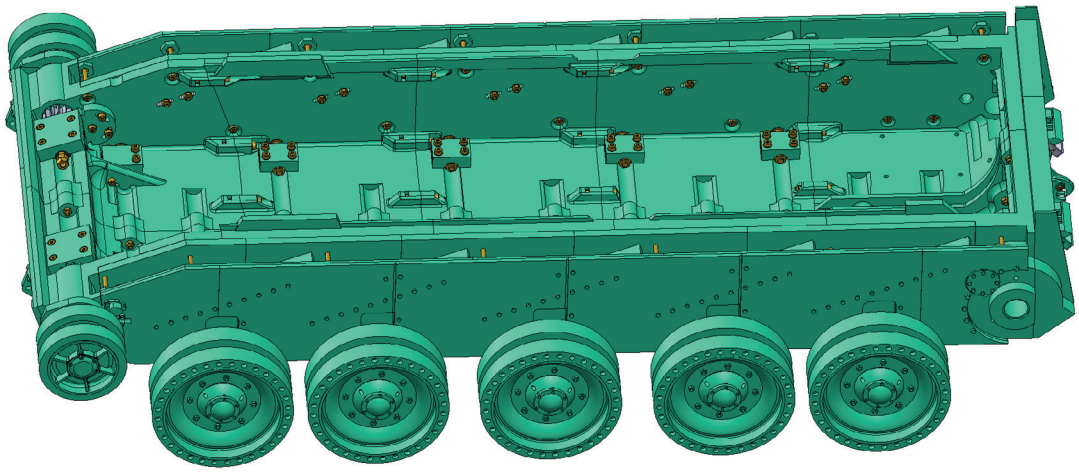

Secure the parts assemblies 01-30 and 01-31 from the inside with 26 M4x40mm screws.

Assembly 01 - Lower Hull

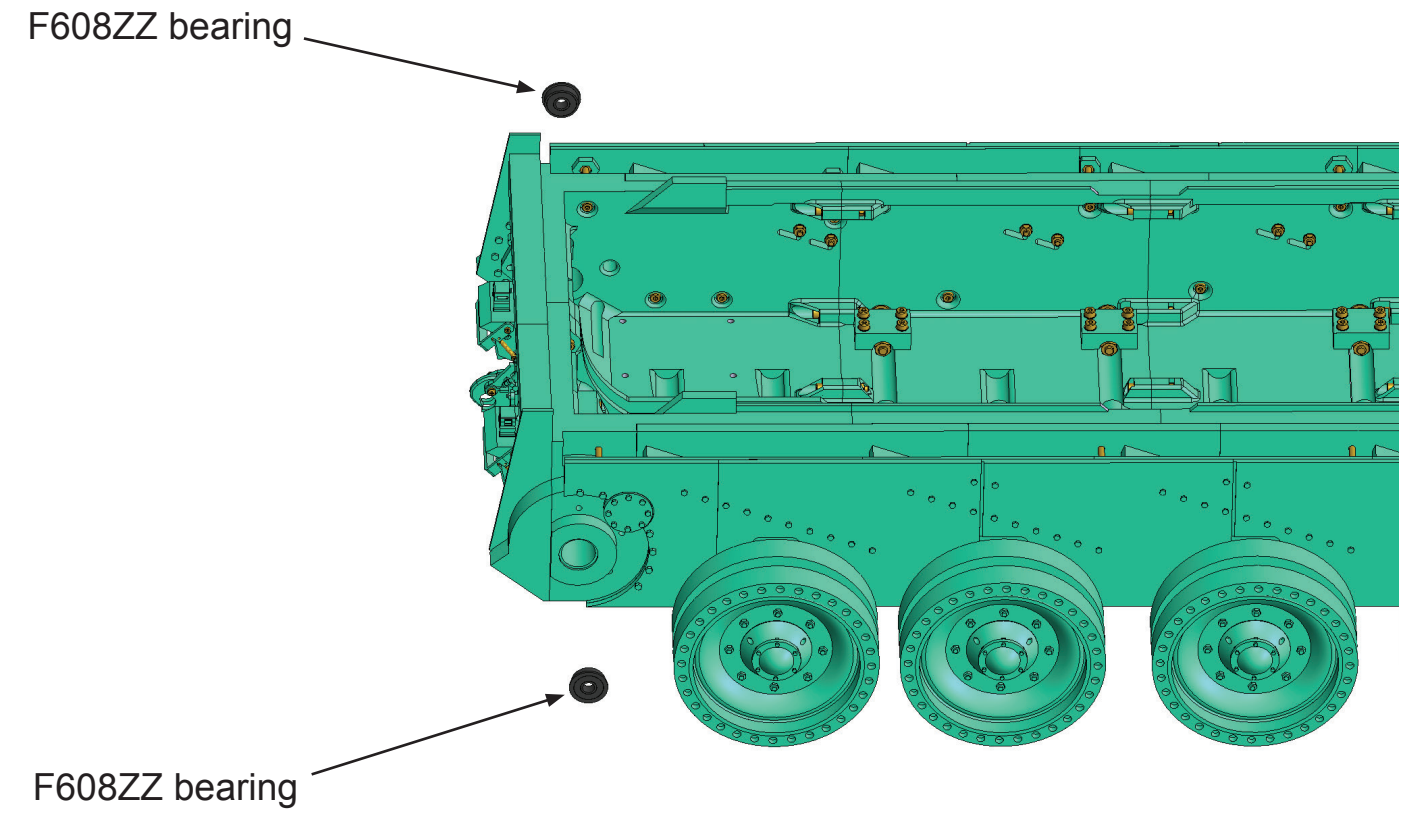

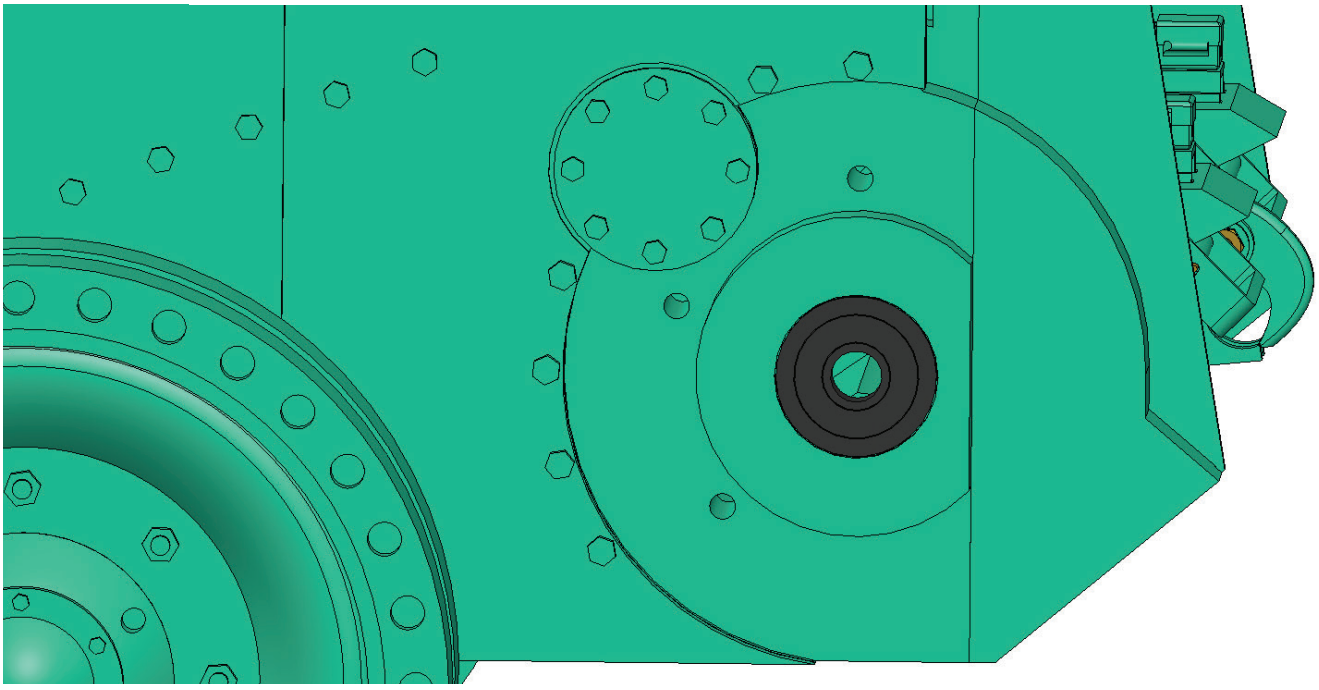

Insert 2 F608ZZ bearings.

Assembly 01 - Lower Hull

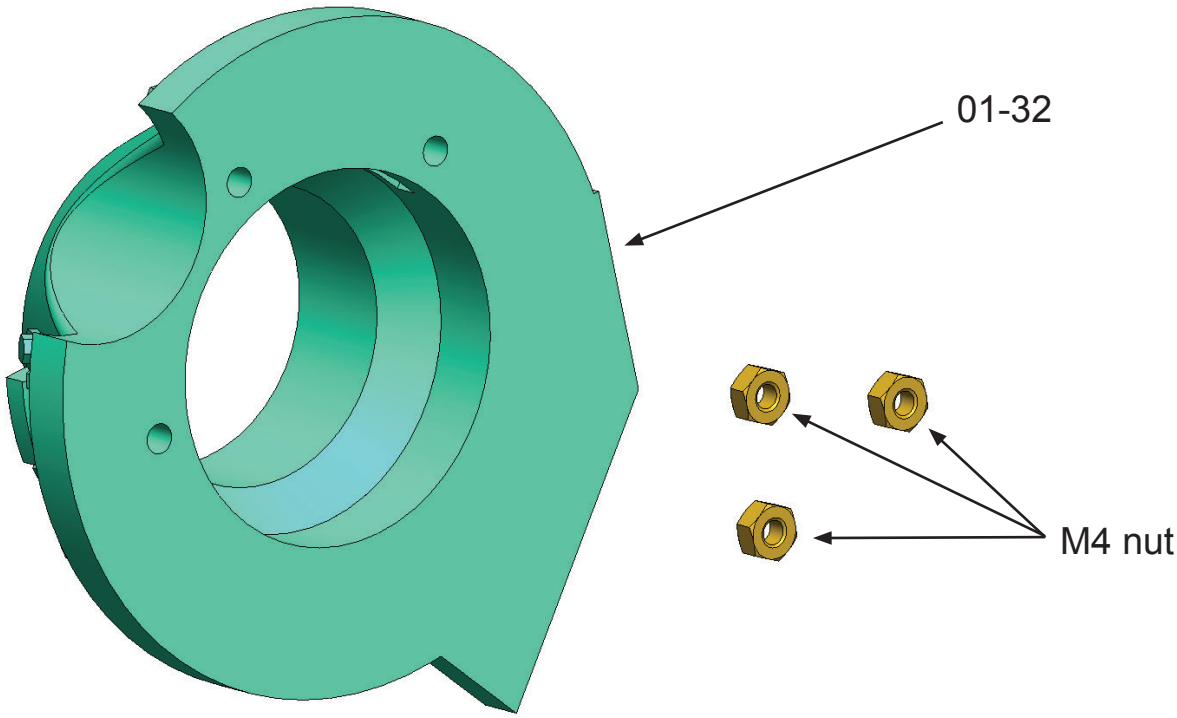

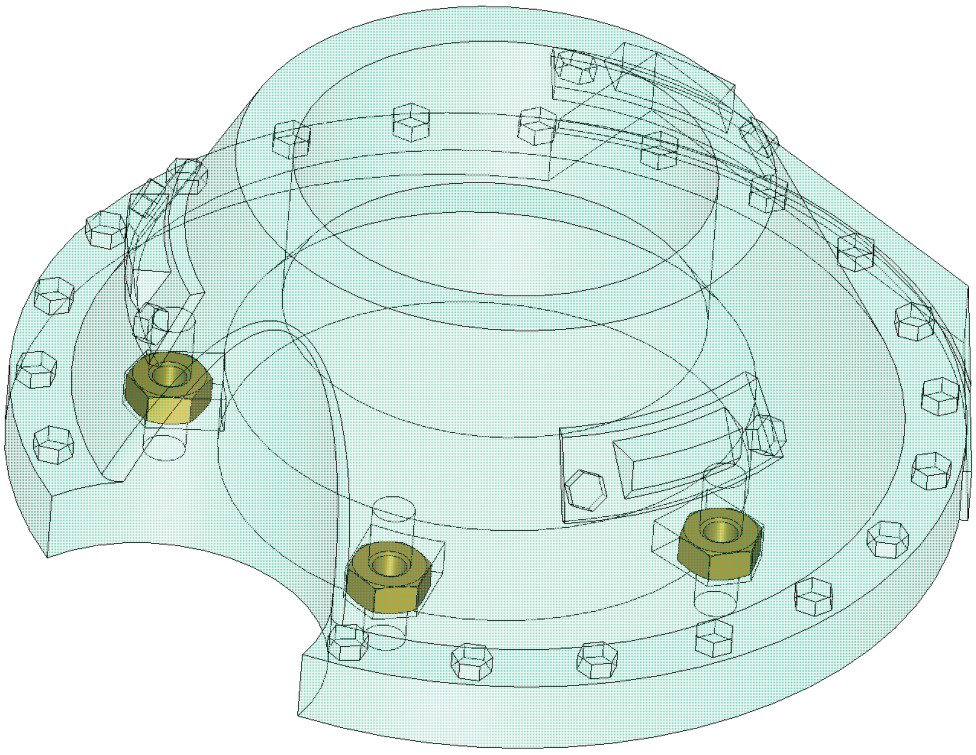

Insert 3 M4 nuts into part 01-32.

Assembly 01 - Lower Hull

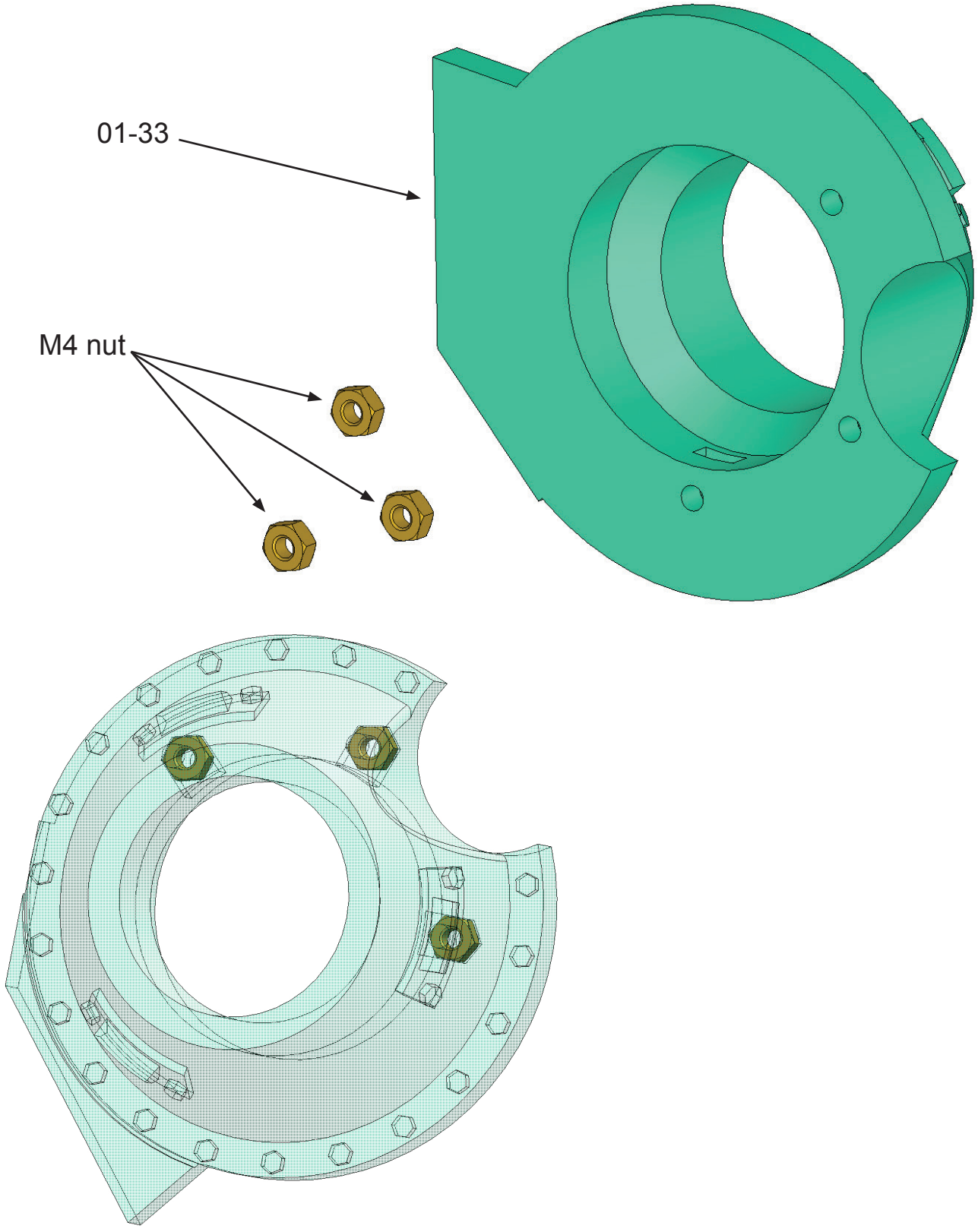

Insert 3 M4 nuts into part 01-33.

Assembly 01 - Lower Hull

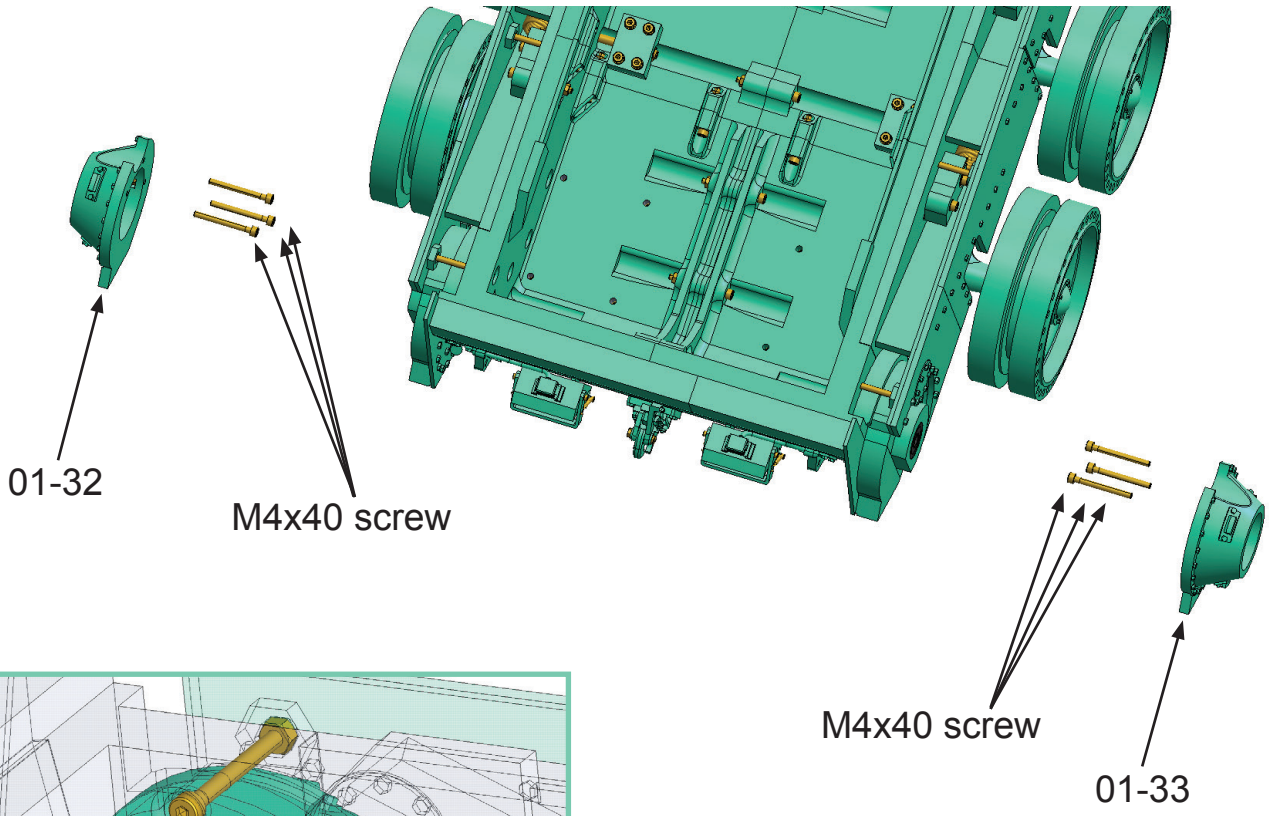

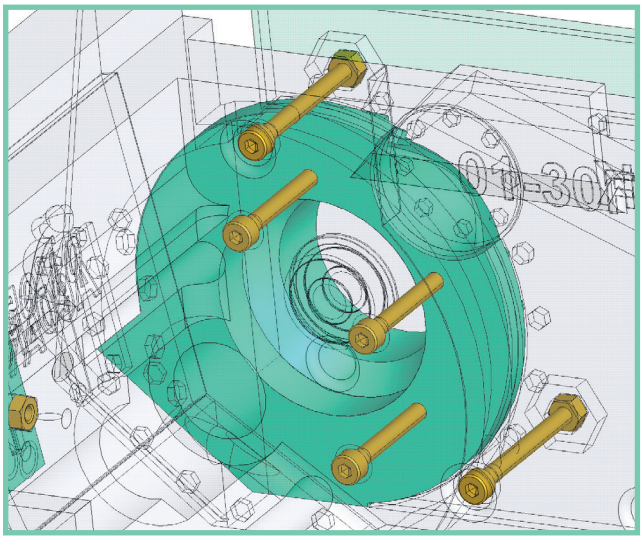

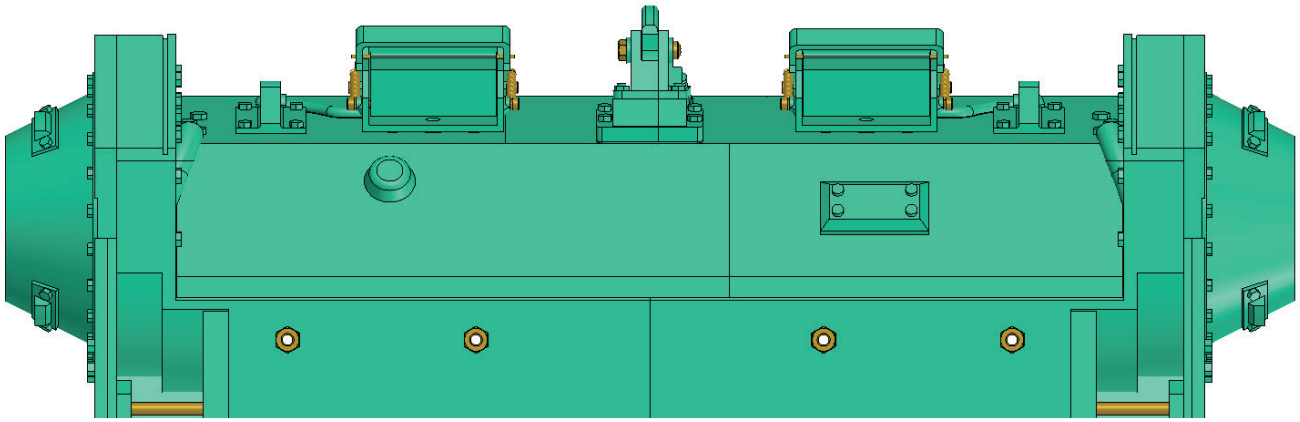

Attach parts 01-32 and 01-33.Use 6 M4x40 screws.Do not glue.

Assembly 01 - Lower Hull

2x

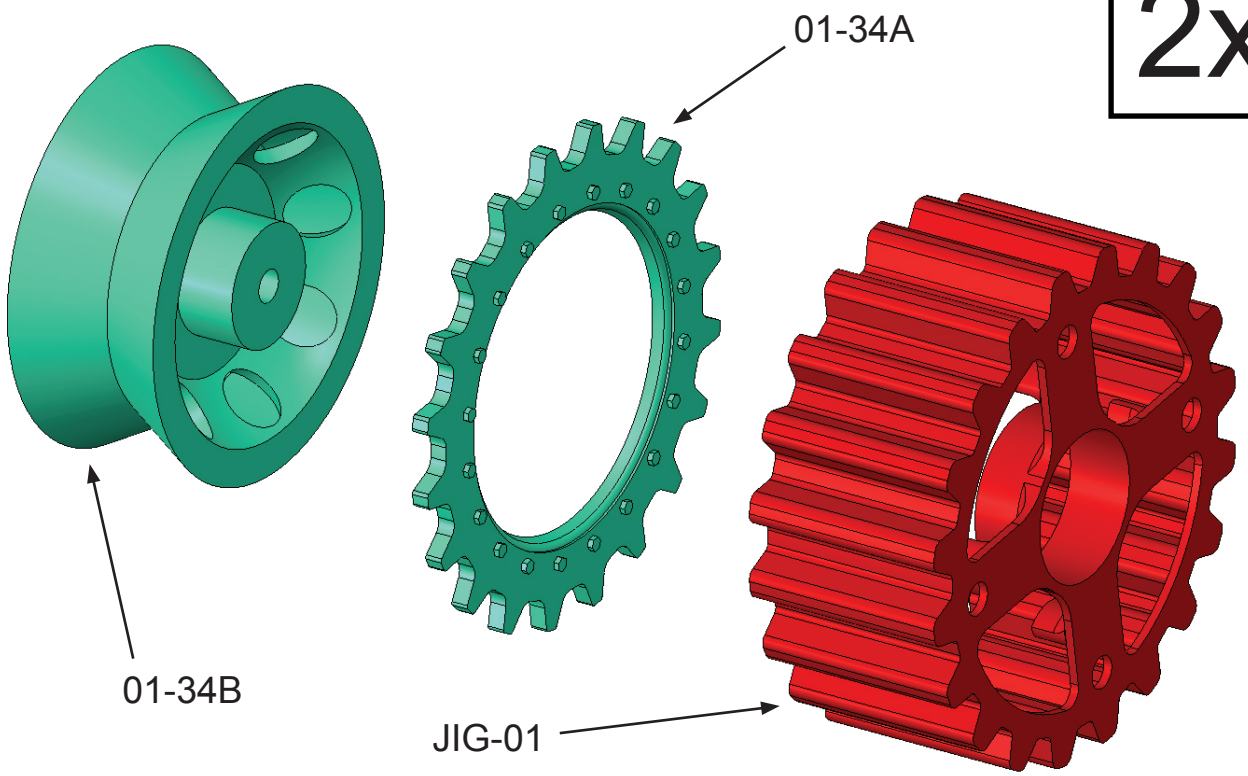

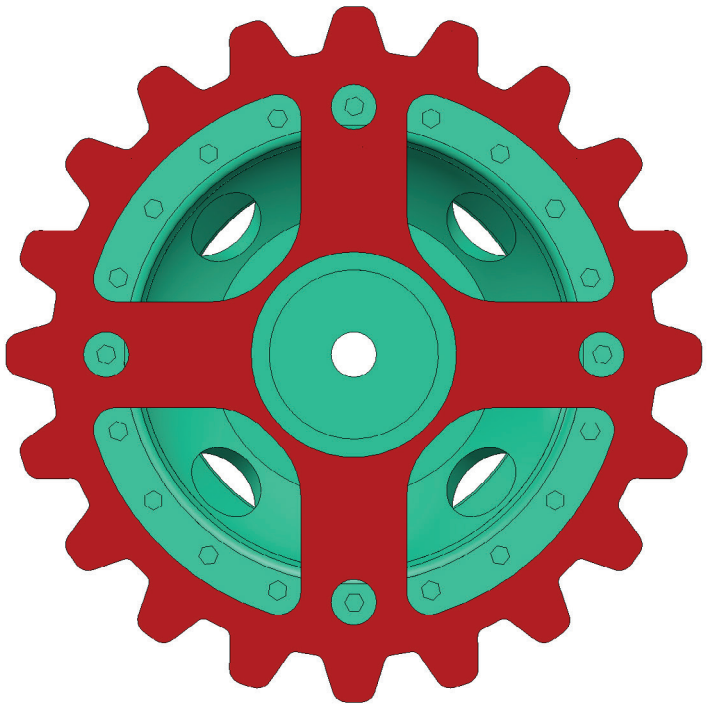

Glue part 01-34A to part 01-34B.
You can use JIG-01 tool for precise gluing.

Assembly 01 - Lower Hull

2x

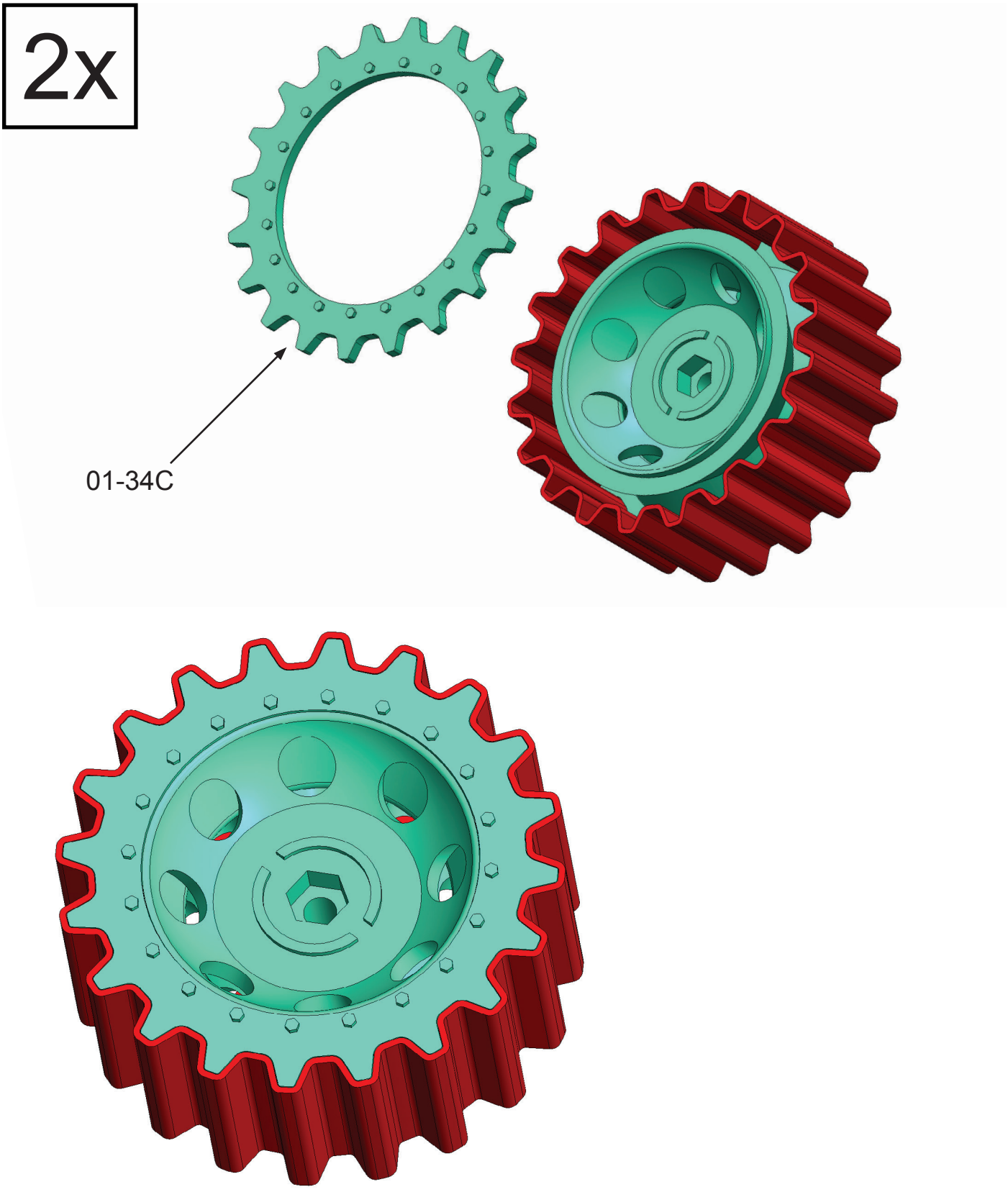

Finish the wheel. Glue part 01-34C to part 01-34B.
You can use JIG-01 again for precise gluing.

Assembly 01 - Lower Hull

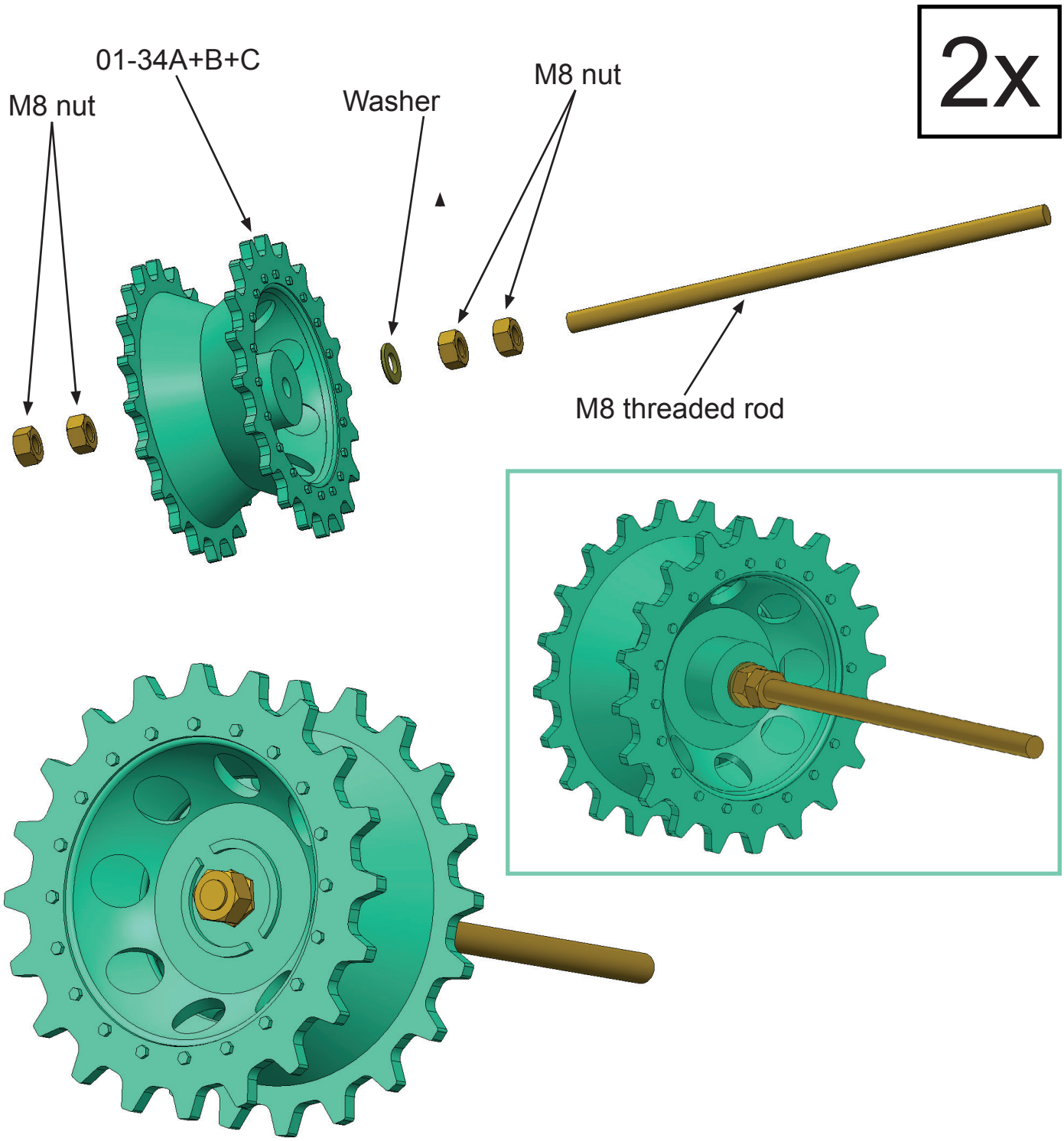

Insert the M8 threaded rod (length 193mm) into the 01-34 assembly.
Secure from the outside with two M8 nuts - tighten them tightly against each other.
On the other side, add one washer and two M8 nuts.
Also tighten them firmly against each other.
These 4 nuts are very important.We recommend securing them with epoxy (apply it to the threads of the nuts when installing).

Assembly 01 - Lower Hull

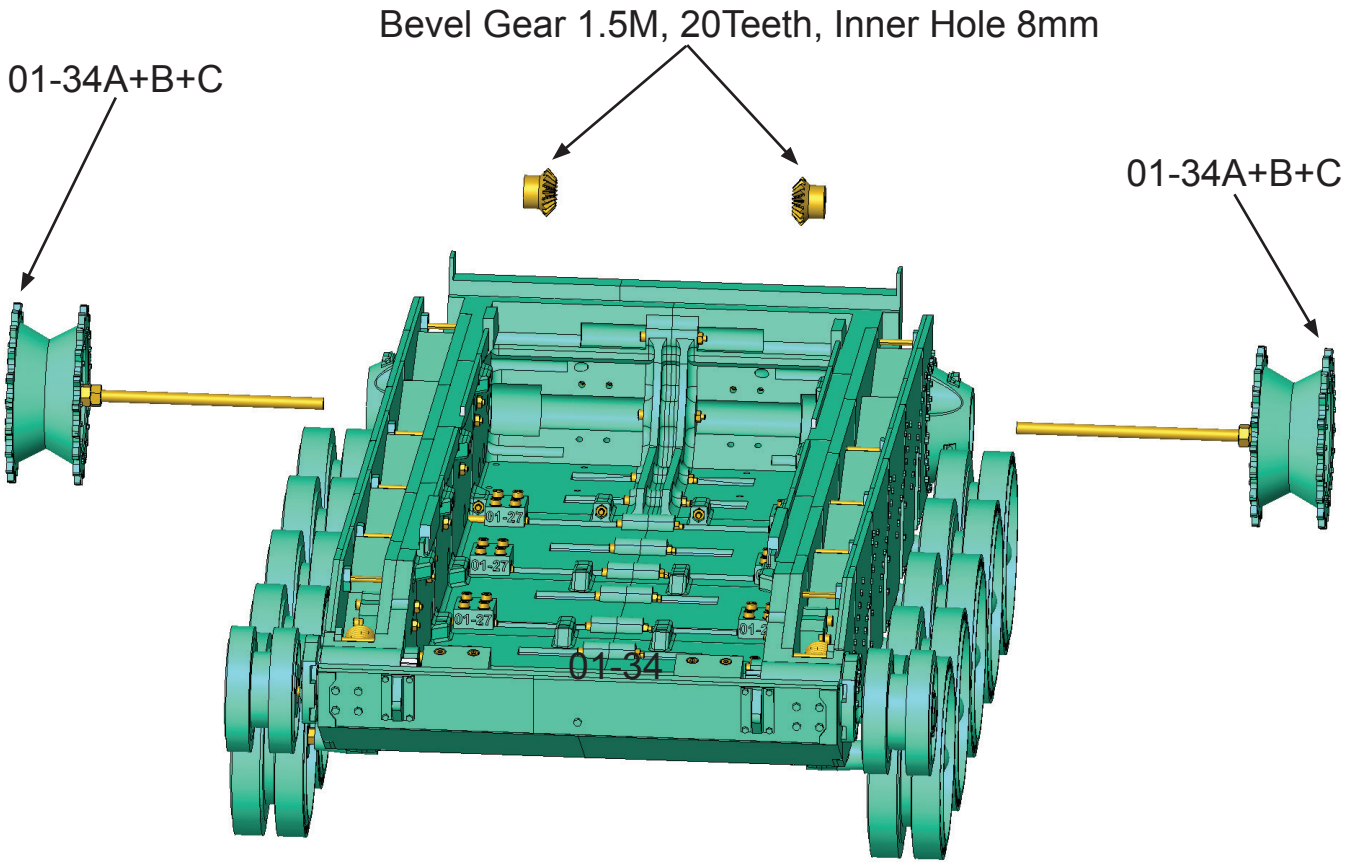

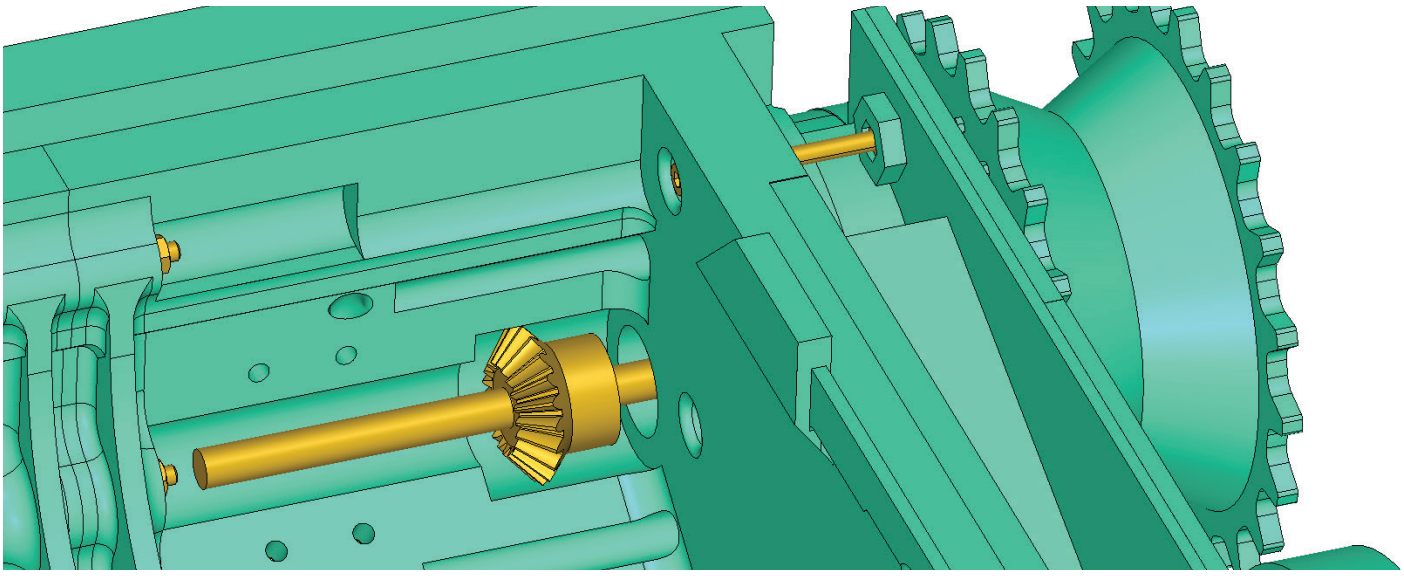

Insert both subassemblies 01-34 into the model.From the other side, insert the bevel gear on the threaded rod.Do not tighten it too tightly yet.
For more reliability, we recommend making a small flat area in the threaded rod at the place where you will install the bevel gear.
Use Bevel Gear 1.5M (module), 20Teeth, inner hole diameter 8mm, outside diameter 31mm, 90 Degrees Meshing Angle.

Assembly 01 - Lower Hull

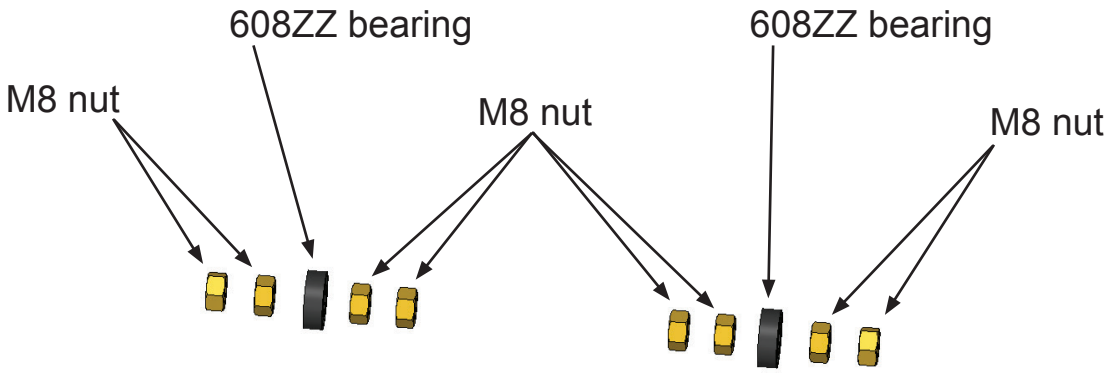

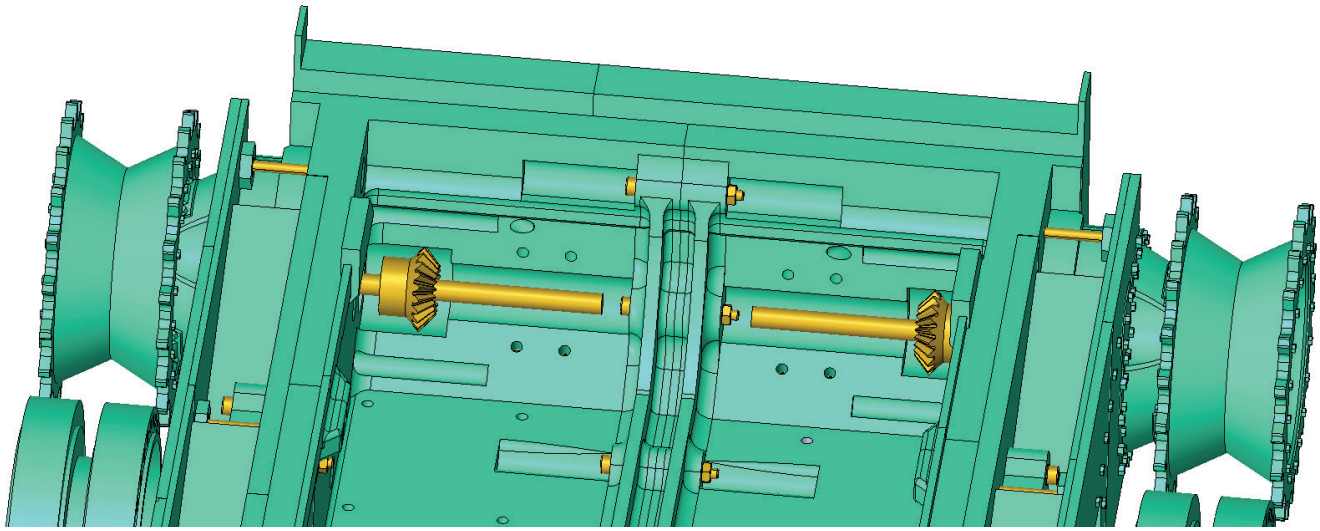

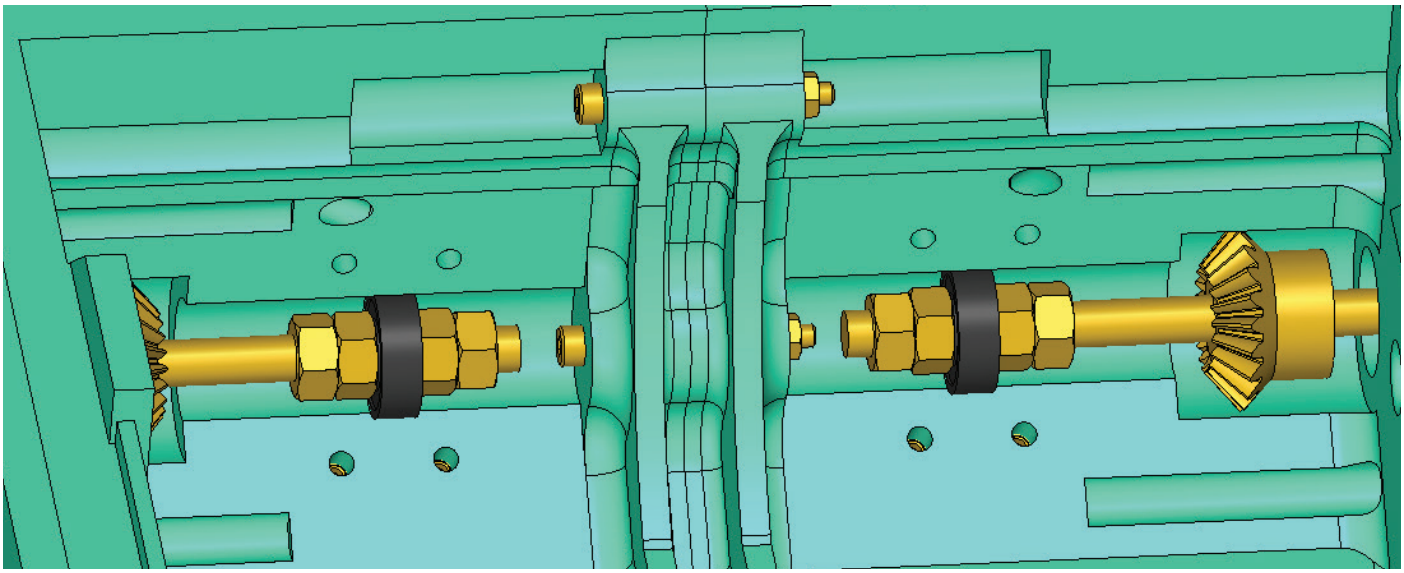

Insert the 608ZZ bearing into the end of the rod.Secure the bearing on both sides with two M8 nuts.Tighten the nuts firmly against each other.
The bearing must be centrally located between the two screw holes in the hull.

Assembly 01 - Lower Hull

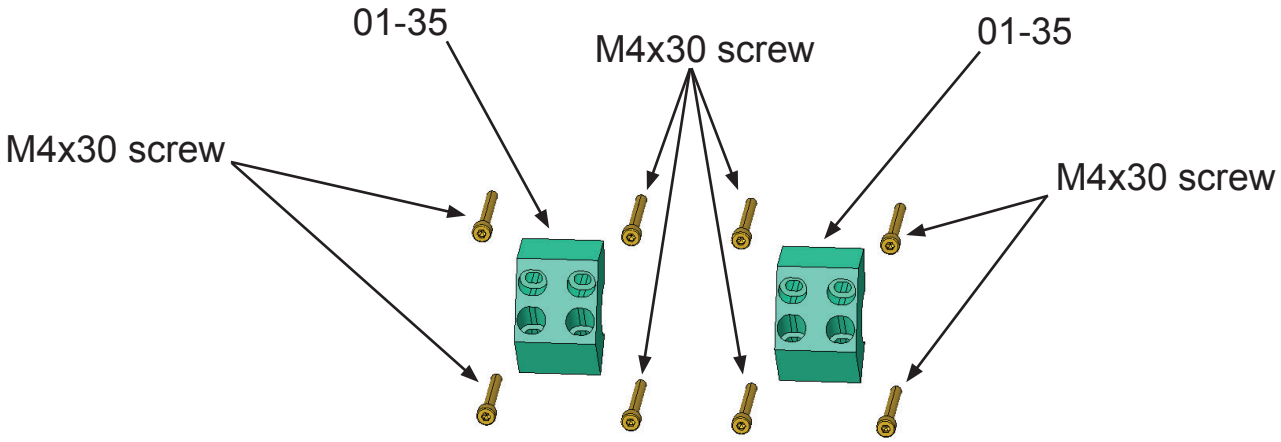

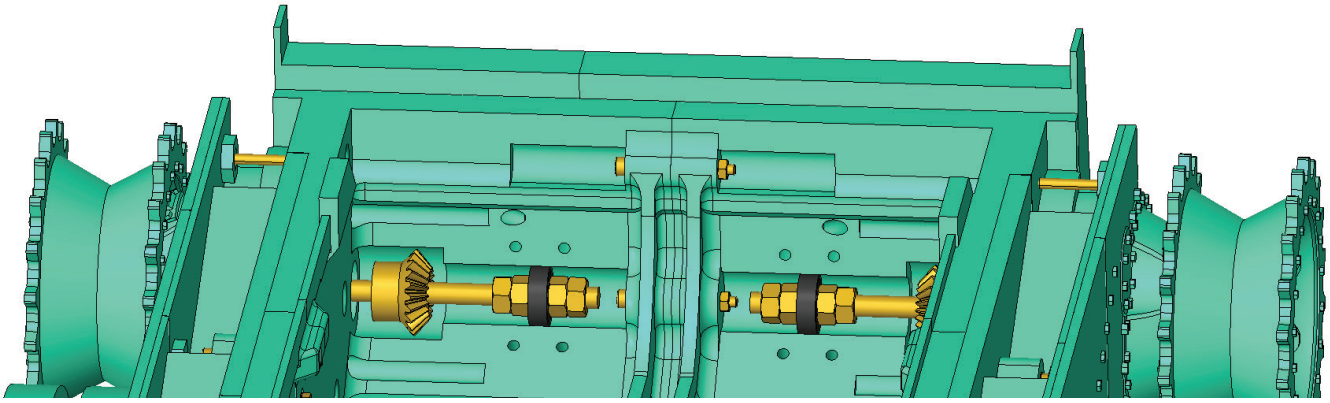

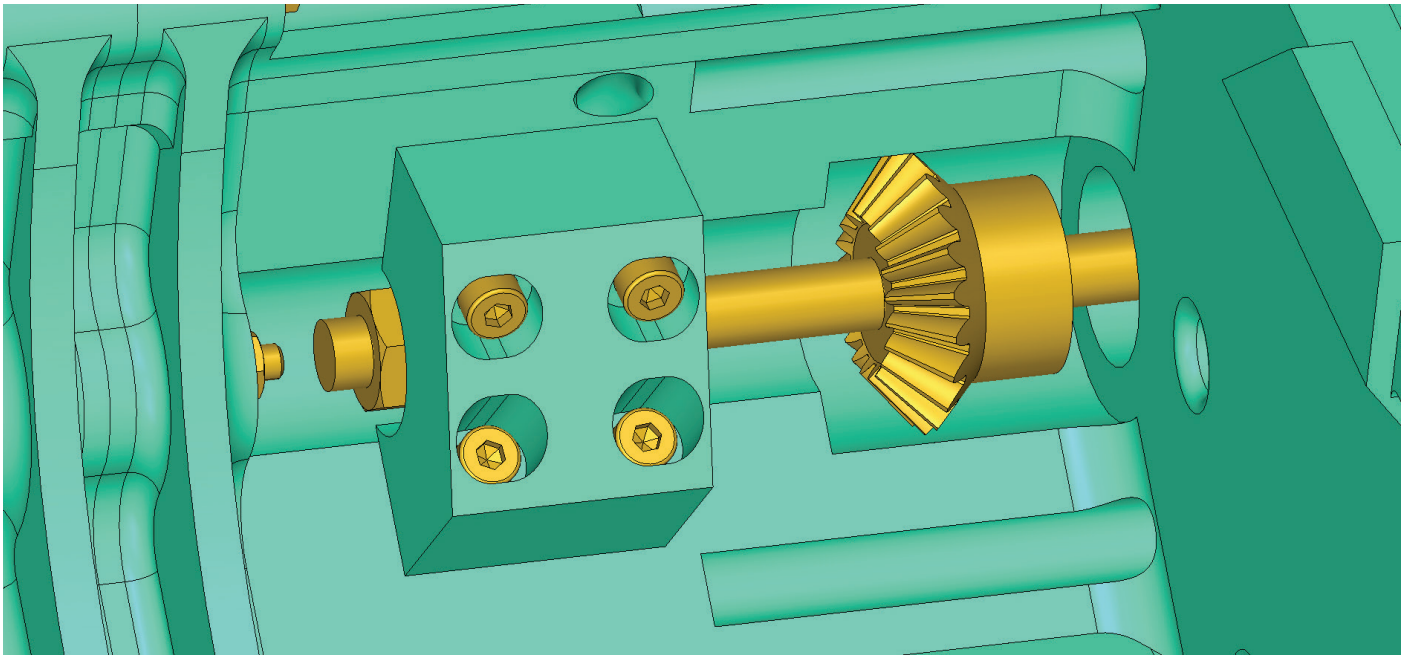

Lock the drive axis with parts 01-35.Use 8 M4x30 screws.

Assembly 01 - Lower Hull

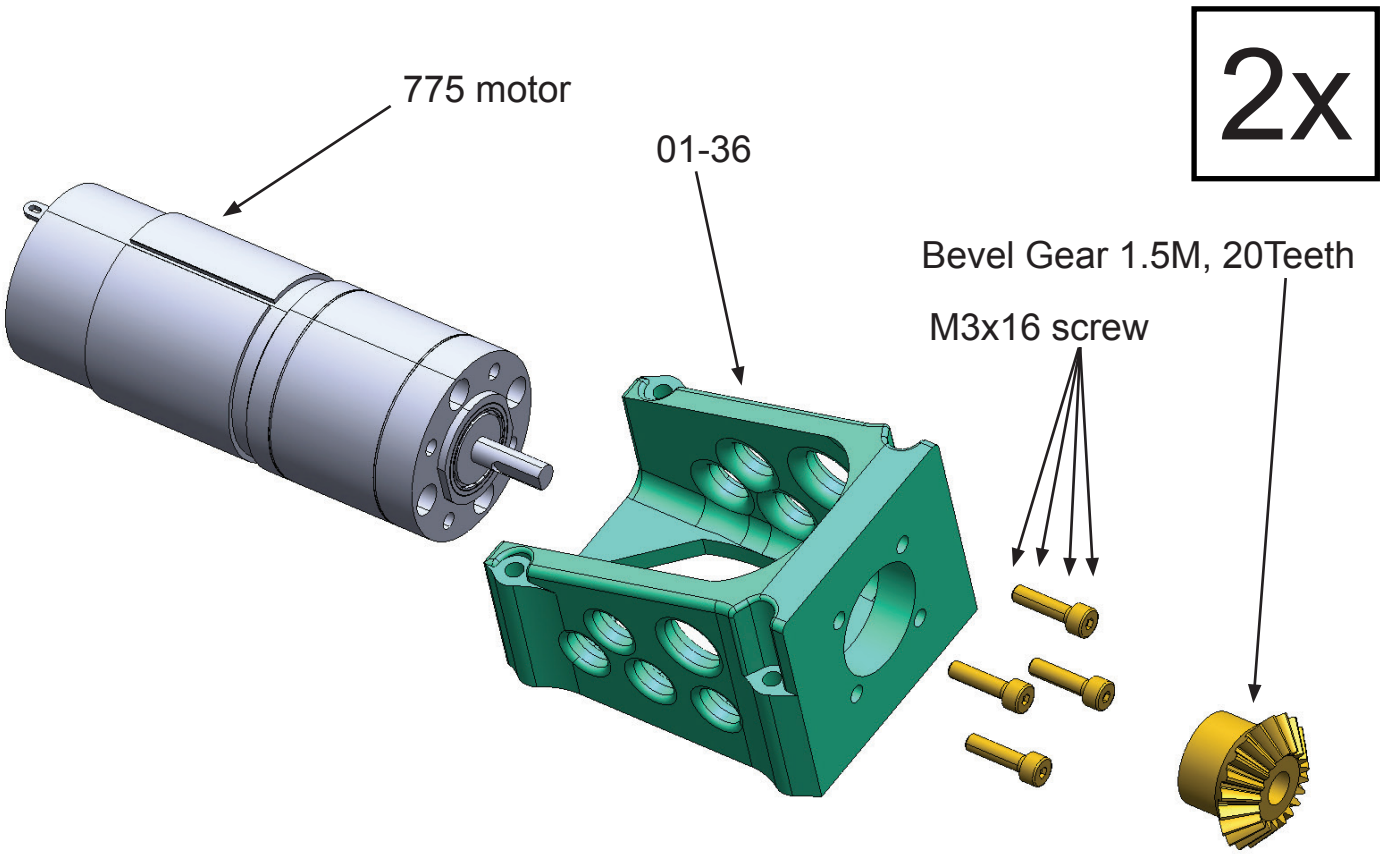

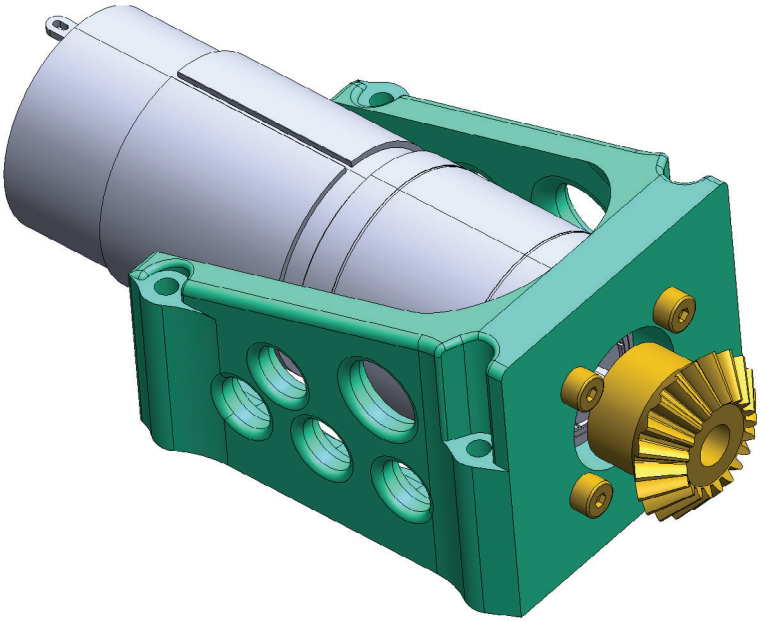

Attach the motors to parts 01-36 with 4 M3x16 screws.
Use size 775 motors with built-in 42mm diameter planetary gearbox.
We recommend a speed between 200-300rpm.
Attach the bevel gear to the motor axis.Do not tighten bevel gears too tightly yet.
Use Bevel Gear 1.5M (module), 20Teeth, inner hole diameter 8mm (or 10mm, depending on your motors shafts), outside diameter 31mm, 90 Degrees Meshing Angle.

Assembly 01 - Lower Hull

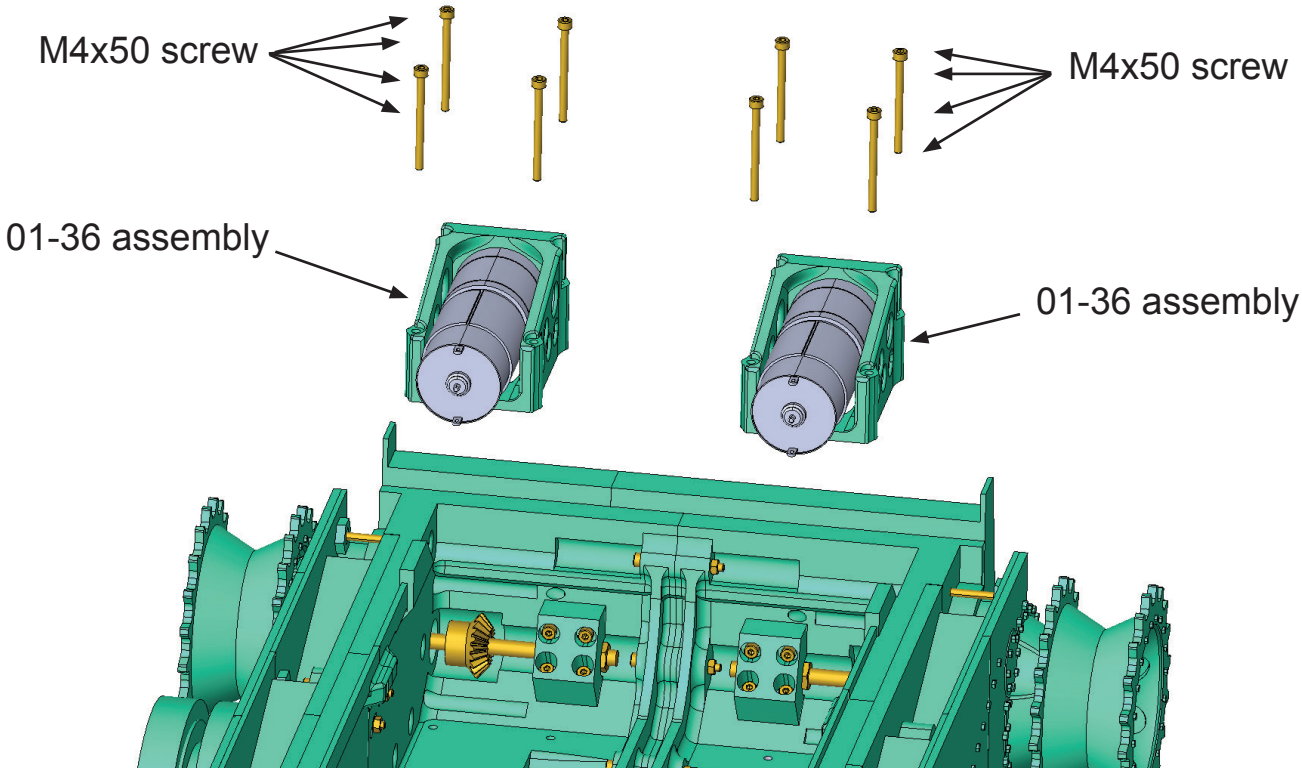

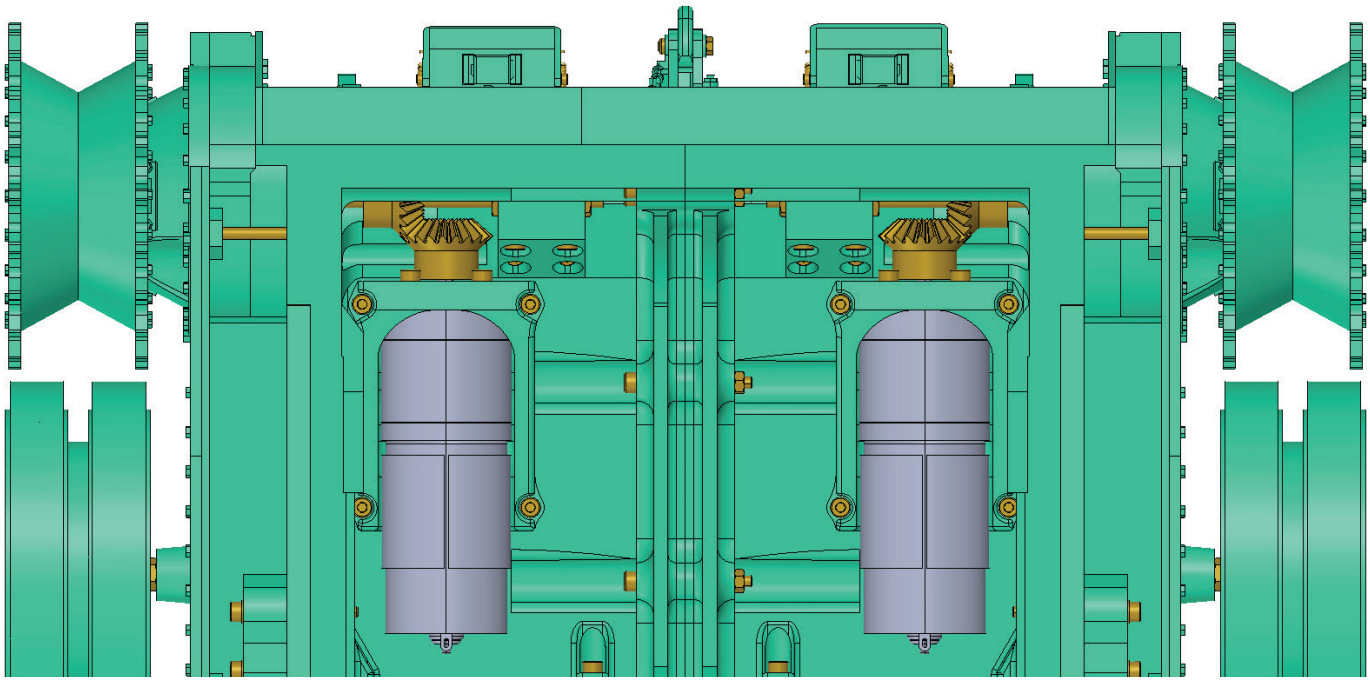

Attach the motors to the hull.Use 8 M4x50 screws.Adjust the exact alignment of all the bevel gears so that they fit exactly together and there is no play between them. Then tighten them as tightly as possible.

Assembly 01 - Lower Hull

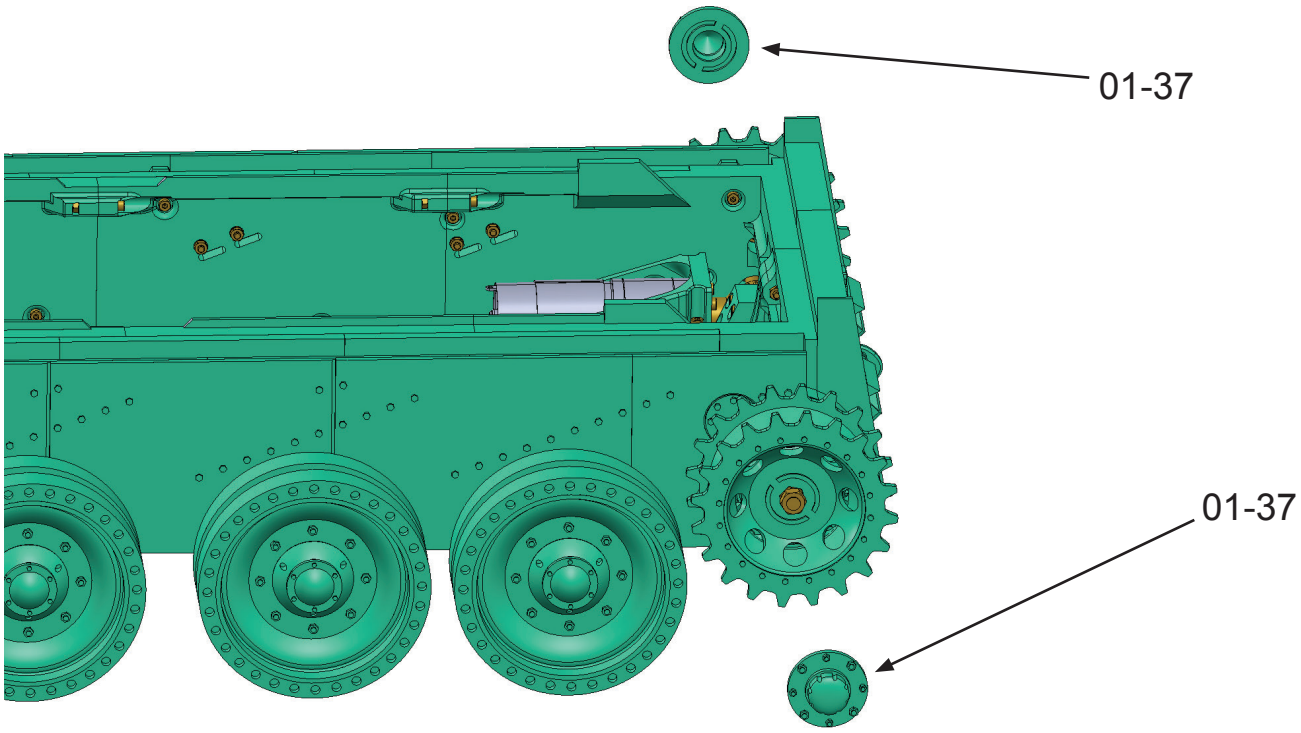

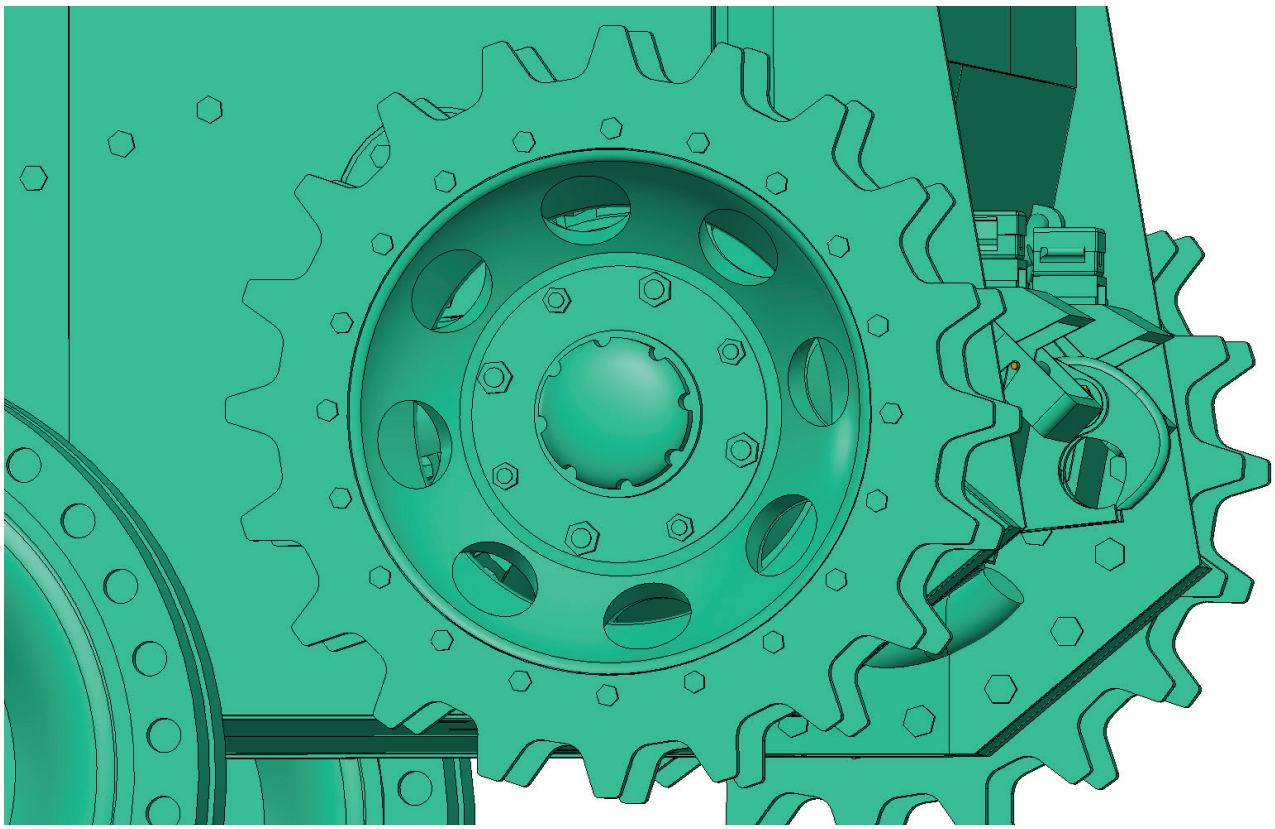

Test for proper function and finally glue parts 01-37.
Use an adhesive that can be removed if necessary.

Assembly 01 - Lower Hull

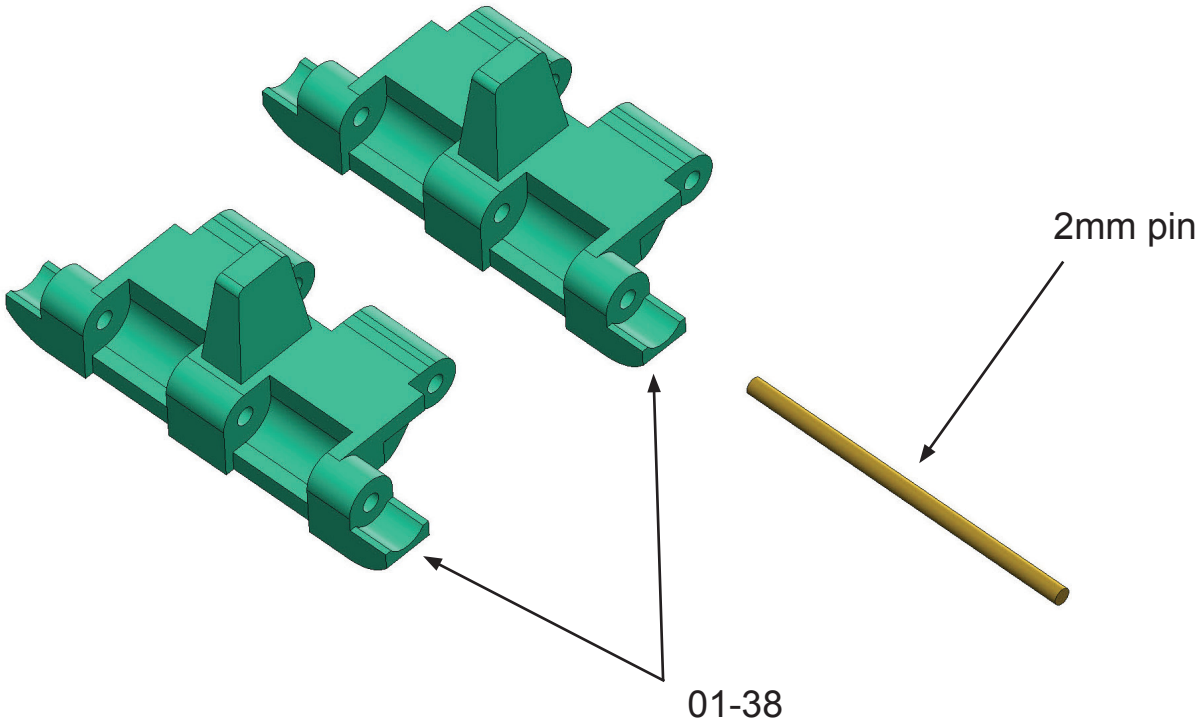

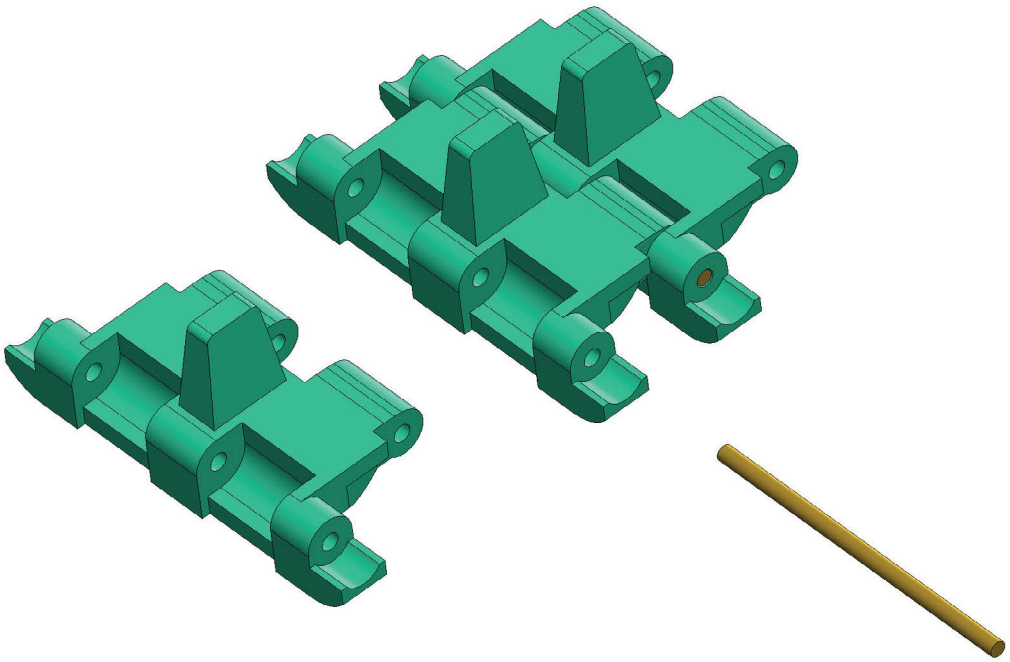

Join the tracks - parts 01-38.
Use a wire with a diameter of 2mm and a length of 46.5mm.
Secure the pins at both ends with glue.You will need 2x120 pieces of the tracks.

Assembly 01 - Lower Hull

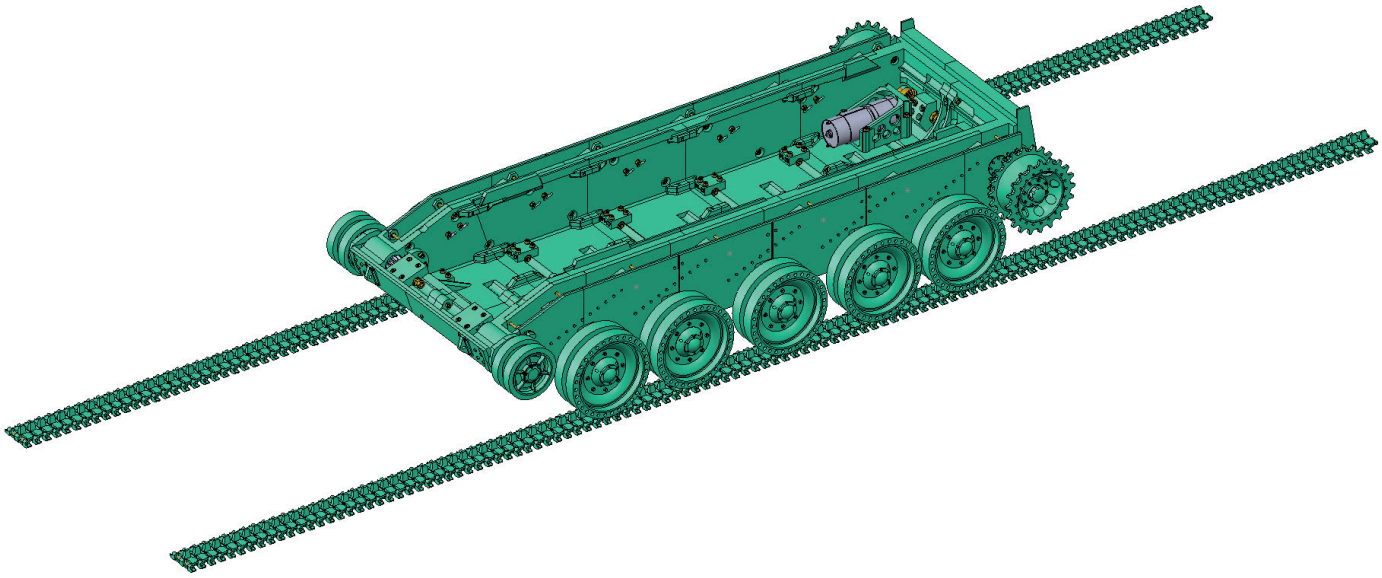

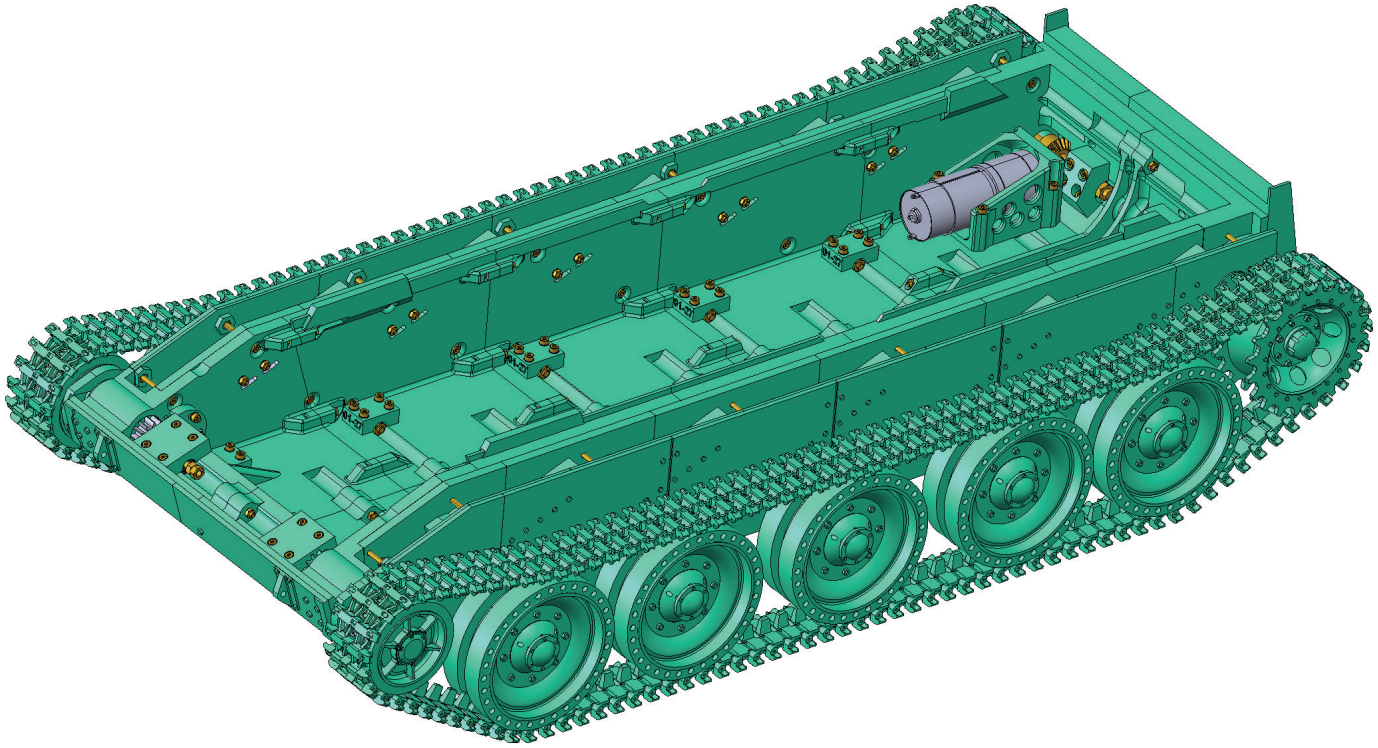

Install the tracks on the model.

Assembly 01 - Lower Hull

Assembly 02 - Upper Hull

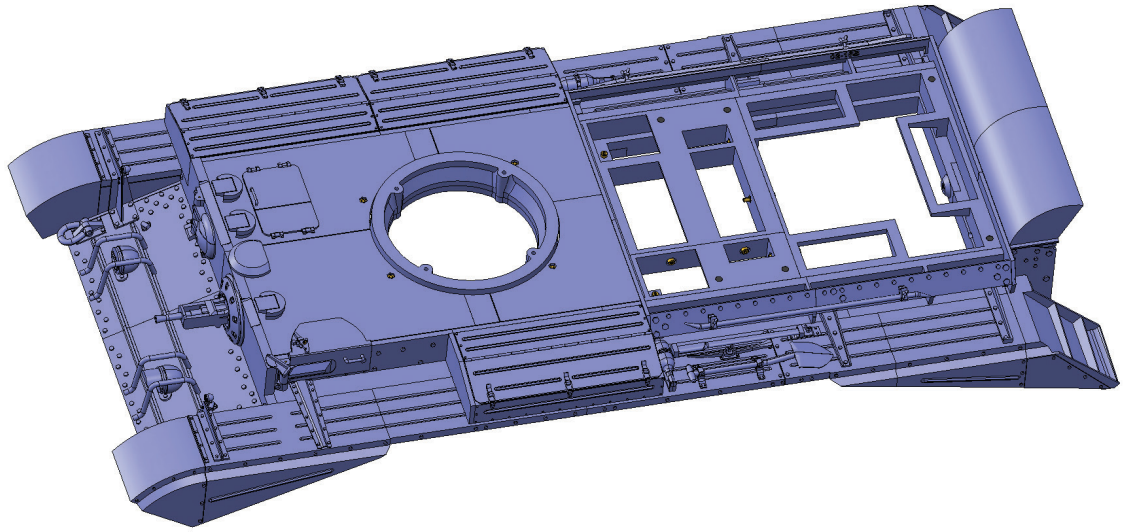

3D PRINTED PARTS:	02-01A (1x), 02-01B (1x), 02-02A (1x), 02-02B (1x), 02-02C (1x), 02-02D (1x), 02-03A (1x), 02-03B (1x), 02-03C (1x), 02-03D (1x), 02-04A (1x), 02-04B (1x), 02-05A (1x), 02-05B (1x), 02-05C (1x), 02-05D (1x), 02-06 (1x), 02-07 (1x), 02-08 (1x), 02-09 (1x), 02-10A (1x), 02-10B (1x), 02-11 (1x), 02-12 (2x), 02-13 (1x), 02-14A (1x), 02-14B (1x), 02-15A (1x), 02-15B (1x), 02-16A (1x), 02-16B (1x), 02-17 (12x), 02-18A (1x), 02-18B (1x), 02-18C (1x), 02-19A (1x), 02-19B (1x), 02-19C (1x), 02-20A (1x), 02-20B (1x), 02-21A (1x), 02-21B (1x), 02-22A (1x), 02-22B (1x), 02-23A (1x), 02-23B (1x), 02-24A (1x), 02-24B (1x),02-24C (1x), 02-25A (1x), 02-25B (1x), 02-25C (1x), 02-26 (1x), 02-27 (2x), 02-28 (1x), 02-29 (1x), 02-30 (2x), 02-31A (1x), 02-31B (1x), 02-31C (1x), 02-31D (1x), 02-31E (1x), 02-32 (1x), 02-33 (1x), 02-34 (1x), 02-35A (1x), 02-35B (1x), 02-36A (1x), 02-36B (1x), 02-37A (1x), 02-37B (1x), 02-37C (1x), 02-38A (1x), 02-38B (1x), 02-38C (1x), 02-38D (1x), 02-39A (4x), 02-39B (4x), 02-40A (2x), 02-40B (2x), 02-41A (1x), 02-41B (1x), 02-41C (1x), 02-41D (1x), 02-42 (1x), 02-43A (1x), 02-43B (1x), 02-44A (1x), 02-44B (1x), 02-45 (3x), 02-46 (3x), 02-47A (3x), 02-47B (3x), 02-47C (3x), 02-47D (9x), 02-48 (1x), 02-49A (2x), 02-49B (2x), 02-50A (1x), 02-50B (1x), 02-50C (1x), 02-51A (1x), 02-51B (1x), 02-51C (1x), 02-52A (2x), 02-52B (2x), 02-52C (1x), 02-53A (2x), 02-53B (2x), 02-53C (1x), 02-54A (2x), 02-54B (2x), 02-54C (1x), 02-54D (1x), 02-55A (1x), 02-55B (1x), 02-55C (1x), 02-55D (1x), 02-55E (1x), 02-55F (1x), 02-55G (1x), 02-55H (1x), 02-55I (1x), 02-55J (1x), 02-55K (1x), 02-56 (4x), 02-57A (1x), 02-57B (1x), 02-58 (1x), 02-59A_Servo (1x), 02-59B_Servo (1x),
OPTIONAL PRINTED PARTS:	02-01AB (1x), 02-02ABCD (1x), 02-03BC (1x), 02-04AB (1x), 02-05AB (1x), 02-05CD (1x), 02-10AB (1x), 02-11_alt (1x), 02-12_alt (2x), 02-13_alt (1x), 02-14AB (1x), 02-15AB (1x), 02-16AB (1x), 02-24A_alt (1x),02-25A_alt (1x), 02-35AB (1x), 02-36AB (1x), 02-43_alt (1x), 02-45_alt (3x), 02-47ABC (3x), 02-49AB (2x), 02-51A_alt (1x), 02-51B_alt (1x), 02-52CD (1x), 02-54CD (1x), 02-55EF (1x), 02-55GH (1x), 02-55IJ (1x), 02-59A_TT (1x), 02-59B_TT (1x),
NON-PRINTED PARTS:	M2 nut (1x), M4 nut (36x), M2x10mm screw (1x), M4x10mm screw (2x), M4x12mm screw (4x), M4x16mm screw (4x), M4x20mm screw (5x), M4x25mm screw (4x), M4x30mm screw (11x), M4x40mm screw (6x), 608zz bearing (8x22x7mm) (4x), Pin -diameter 0.5mm -lenght 6.5mm (2x), Pin -diameter 0.5mm -lenght 200mm (3x), Pin -diameter 1mm -lenght 12mm (4x), Pin -diameter 2mm -lenght 55mm (1x), LED 3mm -warm white or yellow (2x), LED 5mm -warm white (2x), Magnet -diameter 7mm -lenght 6mm (6x), Servo MG995 (1x).
OPTIONAL NON-PRINTED PARTS:	M3 nut (2x), M2x8mm screw (1x), M3x25mm screw (2x), M4x30mm screw (2x), TT motor (1x).

Assembly 02 - Upper Hull



Glue parts 02-01A and 02-01B.
SKIP THIS STEP, IF YOU HAVE BIG PRINTER (USE PART 02-01AB).

Assembly 02 - Upper Hull

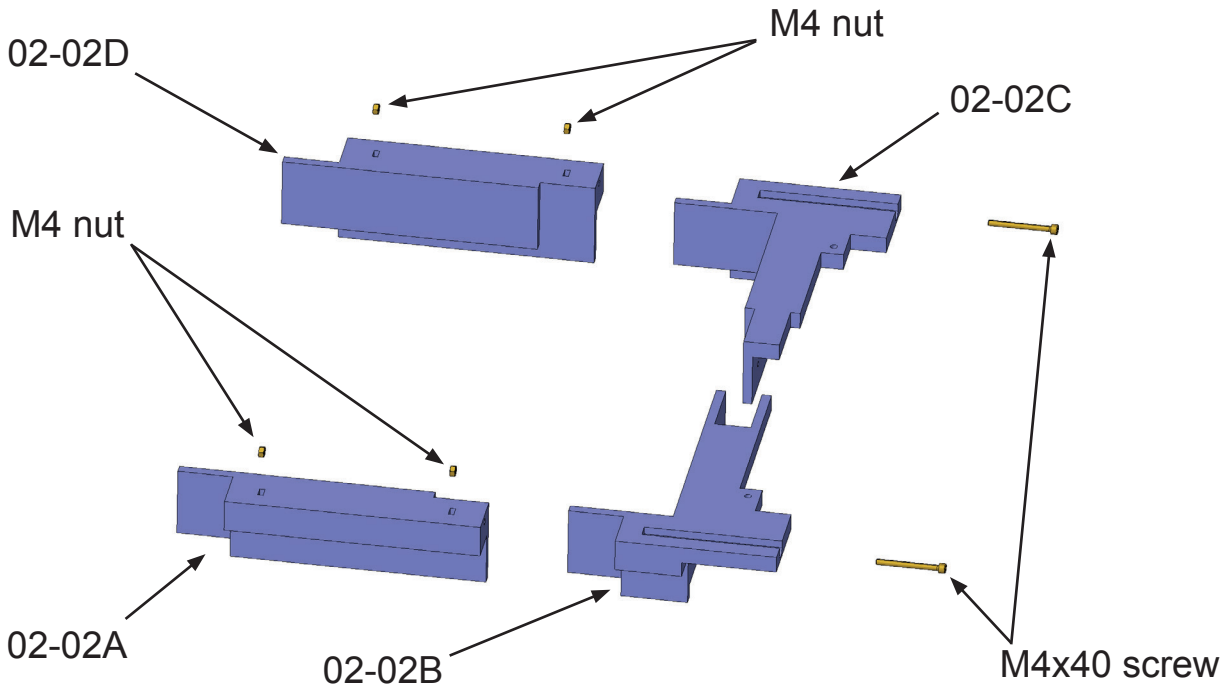

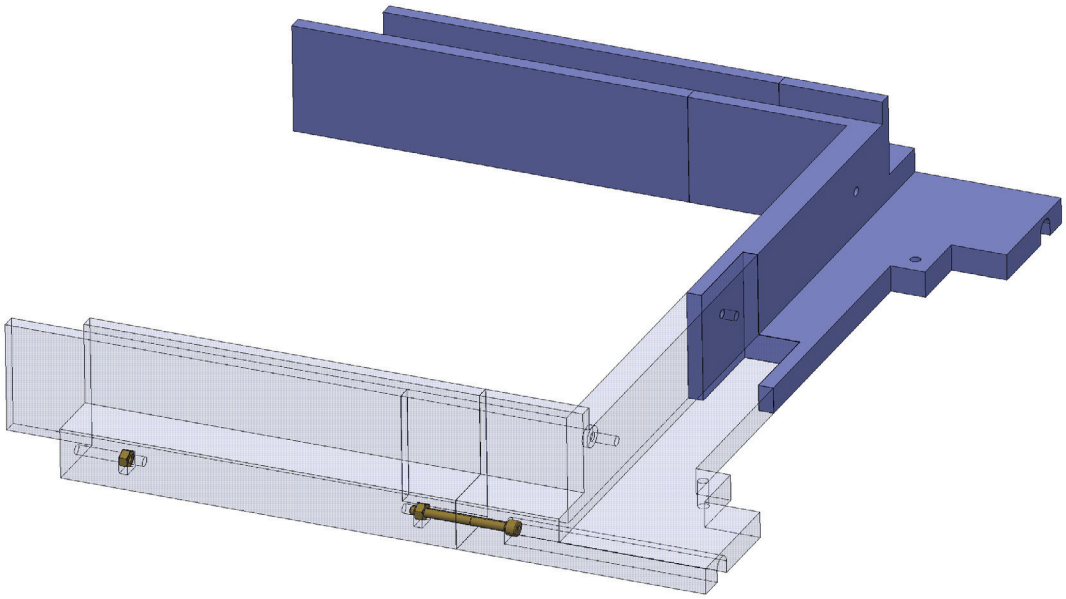

Glue parts 02-02A, 02-02B, 02-02C and 02-02D.
Insert 4 M4 nuts, use 2 M4x40 screws.
These help with precise gluing and strengthen the structure.
SKIP THIS STEP, IF YOU HAVE BIG PRINTER (USE PART 02-02ABCD).

Assembly 02 - Upper Hull

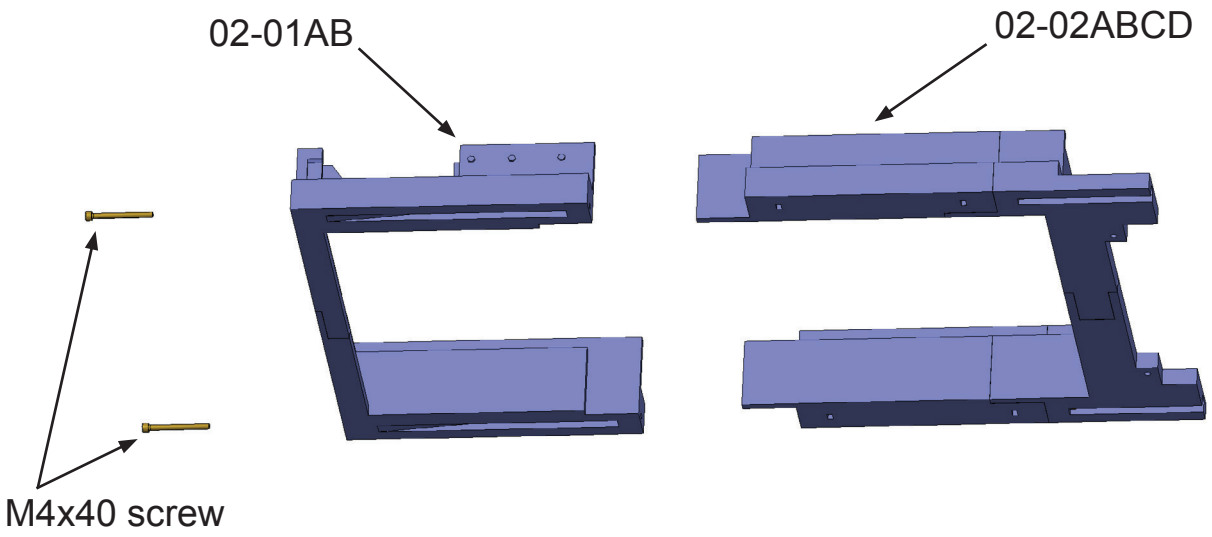

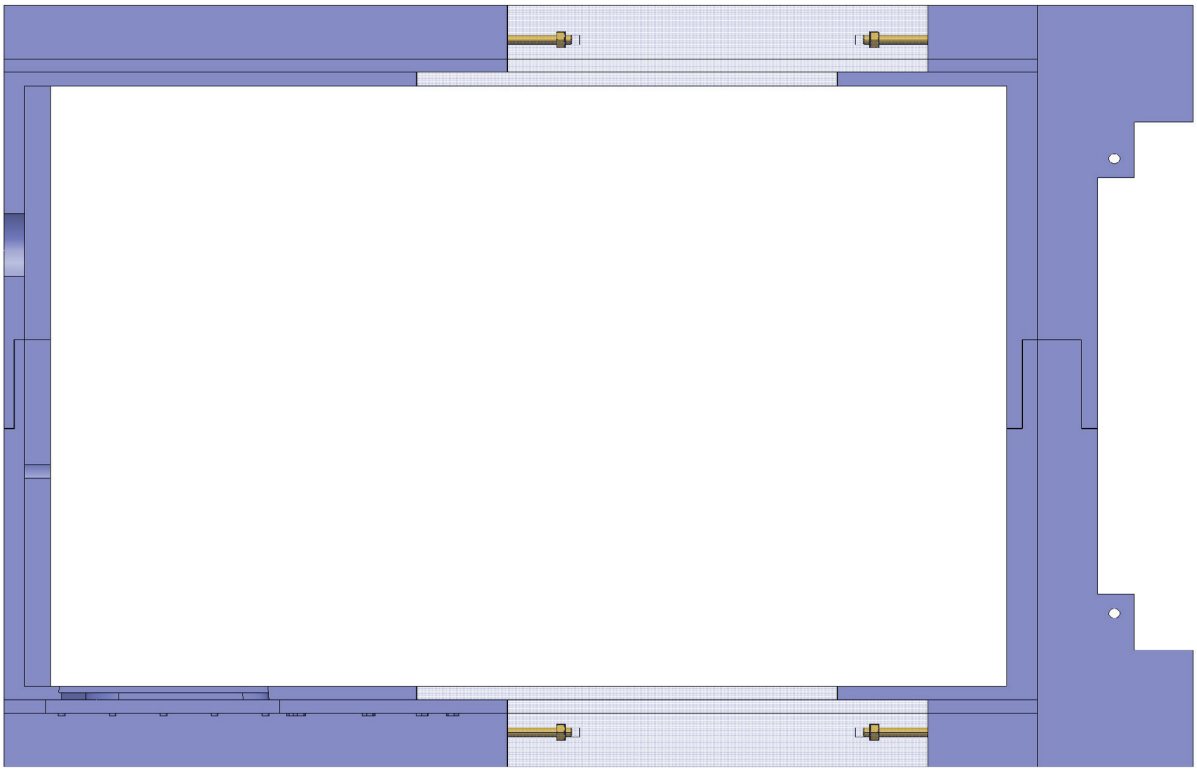

Glue parts 02-01AB and 02-02ABCD.
Secure the whole parts assemblies from 02-01A to 02-02D with M4x40 screws.

Assembly 02 - Upper Hull

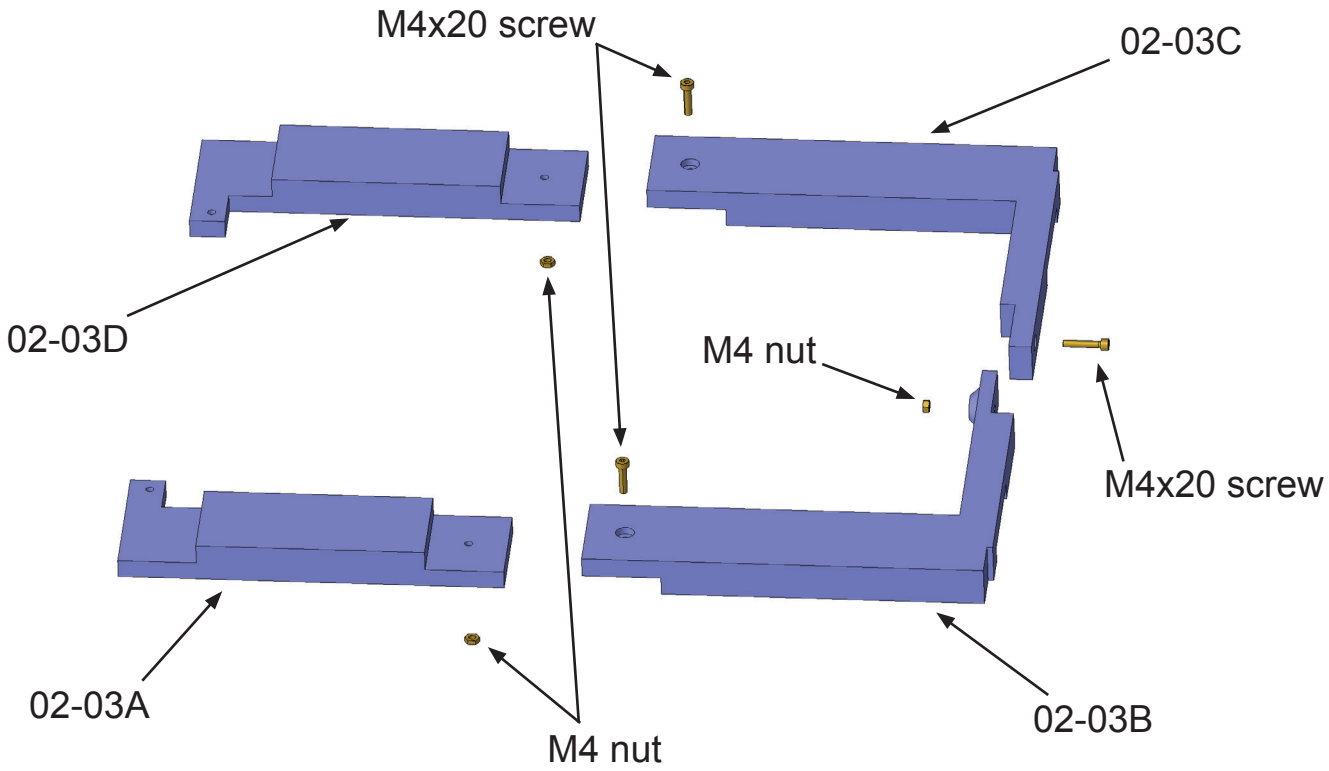

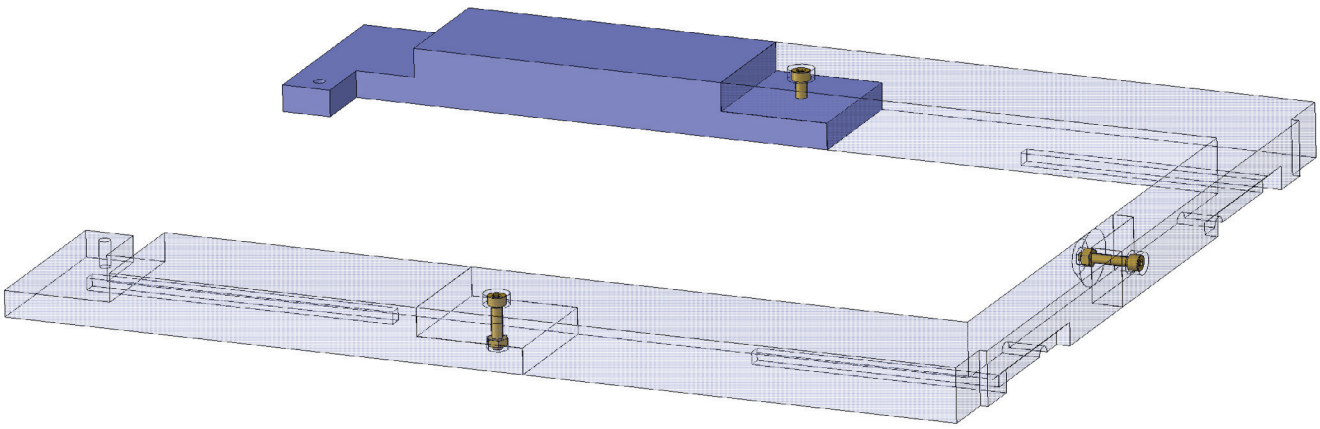

Glue parts 02-03A, 02-03B, 02-03C and 02-03D.
Use 3 M4x20 screws and 3 M4 nuts.
IF YOU HAVE BIG PRINTER, USE PART 02-03BC.

Assembly 02 - Upper Hull

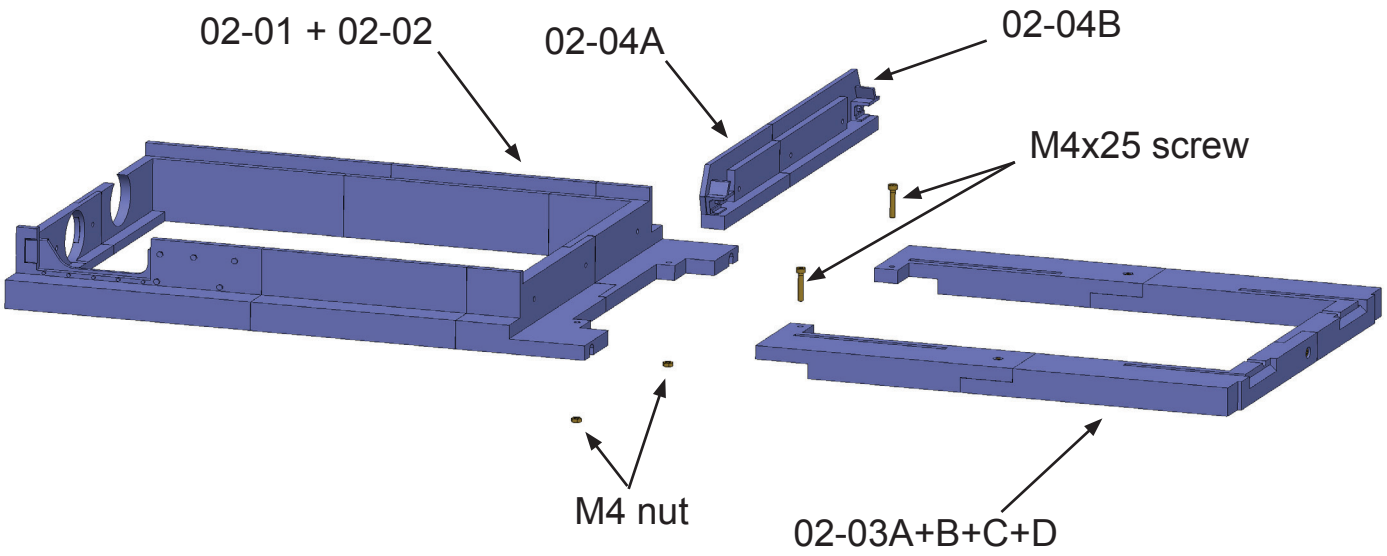

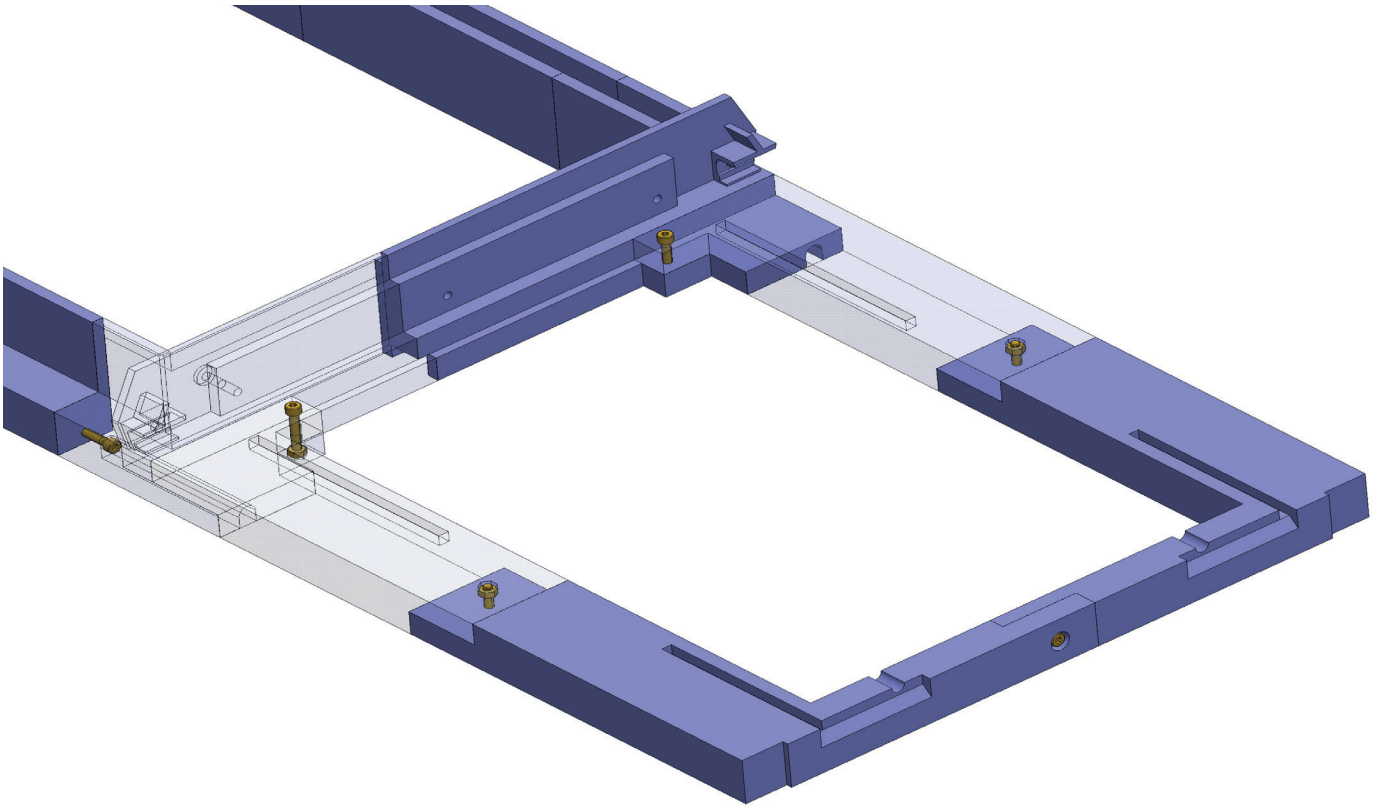

Glue the prepared assemblies of parts 02-01, 02-02, 02-03, 02-04A and 02-04B.
Secure the whole parts assemblies from 02-01 to 02-03 with M4x25 screws.
IF YOU HAVE BIG PRINTER, USE PART 02-04AB.

Assembly 02 - Upper Hull

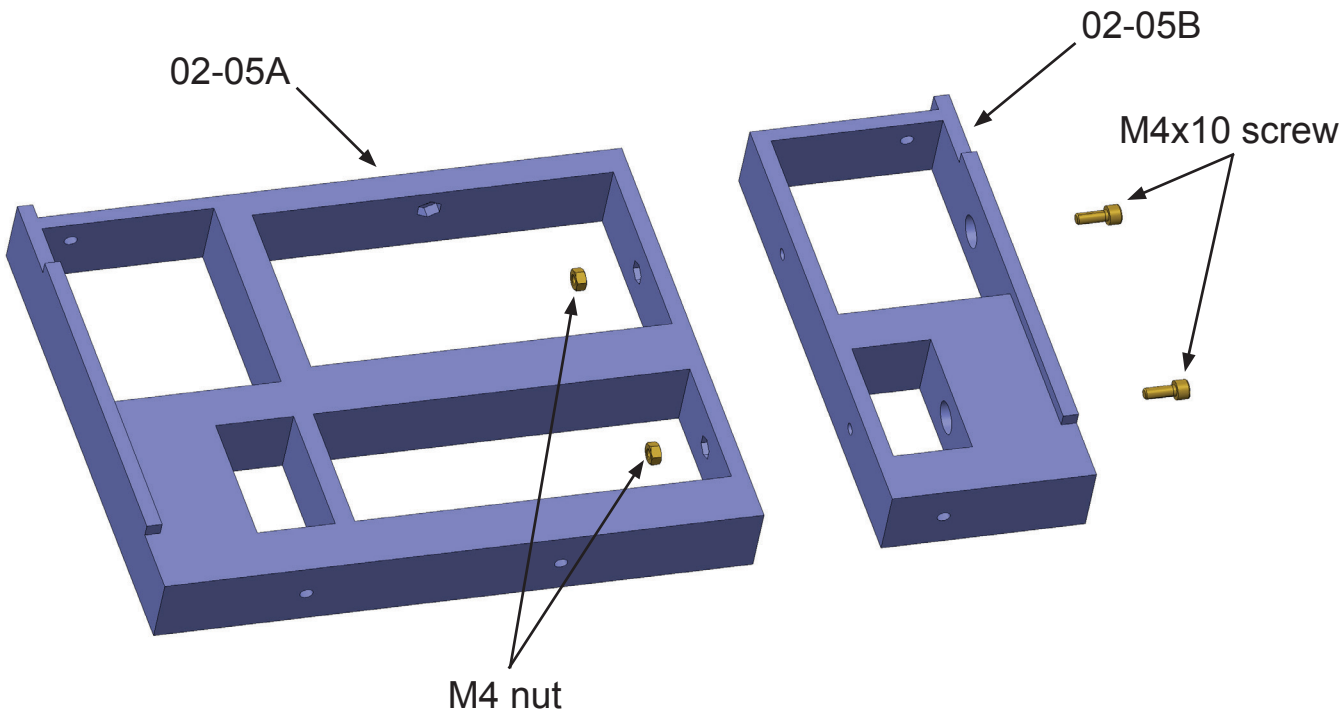

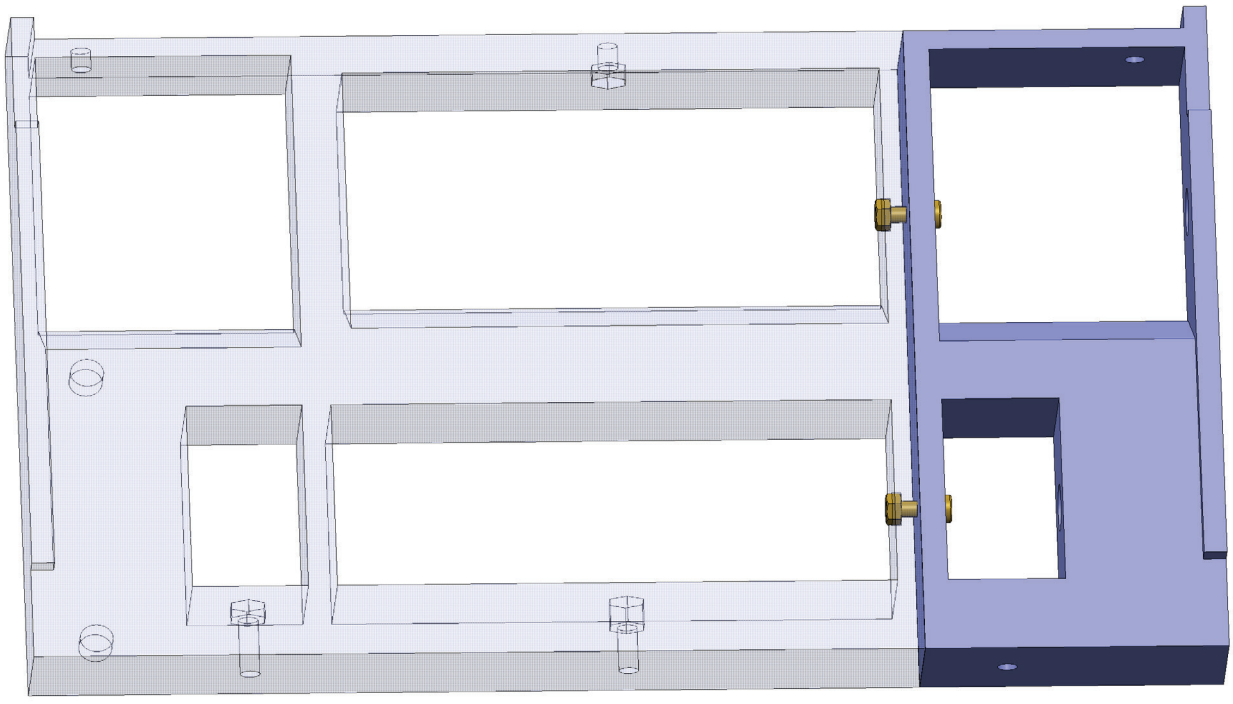

Glue parts 02-05A and 02-05B.
Insert two M4 nuts, use 2 M4x10 screws.
SKIP THIS STEP, IF YOU HAVE BIG PRINTER (USE PART 02-05AB).

Assembly 02 - Upper Hull

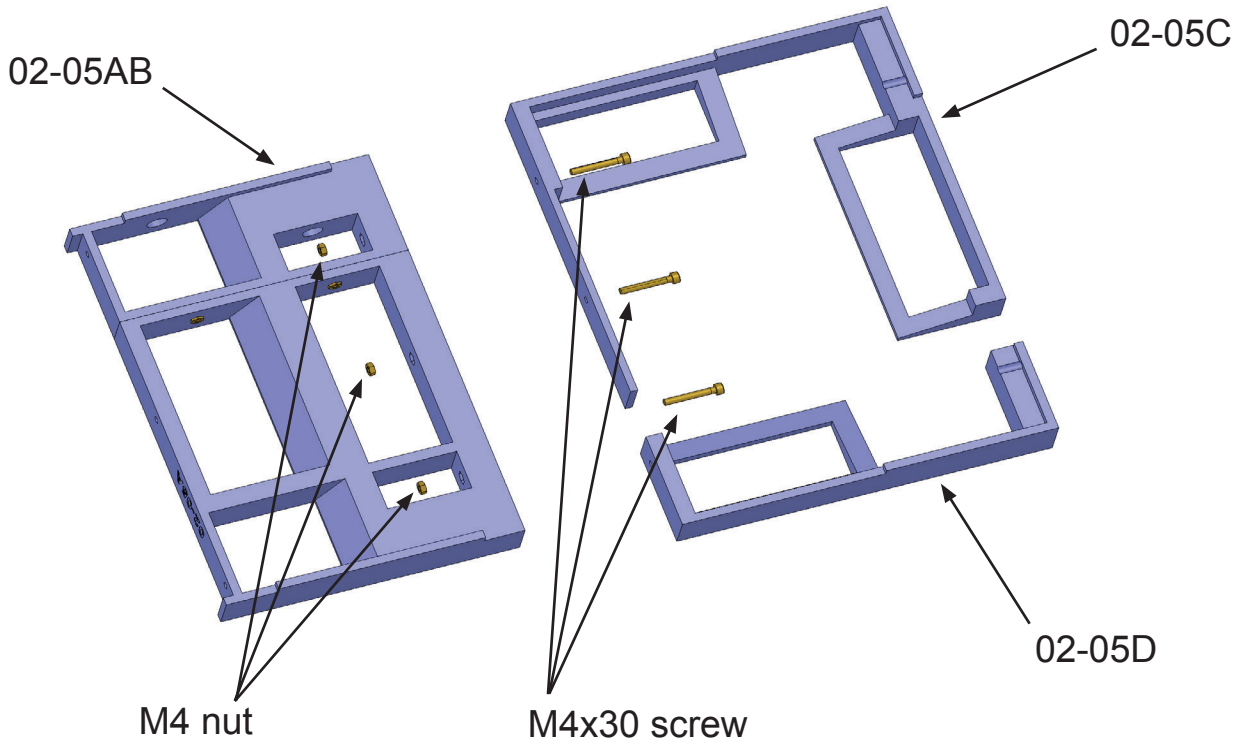

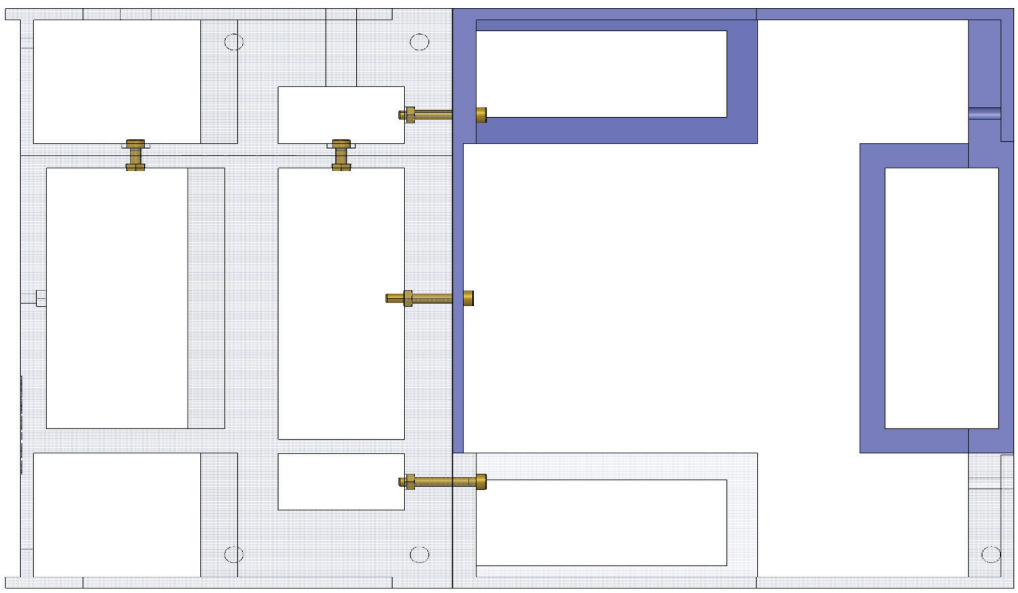

Glue parts 02-05C and 02-05D.
IF YOU HAVE BIG PRINTER, USE PART 02-05CD.
Secure the whole parts assemblies from 02-05A to 02-05D with M4x30 screws.
You will need three M4 nuts.

Assembly 02 - Upper Hull

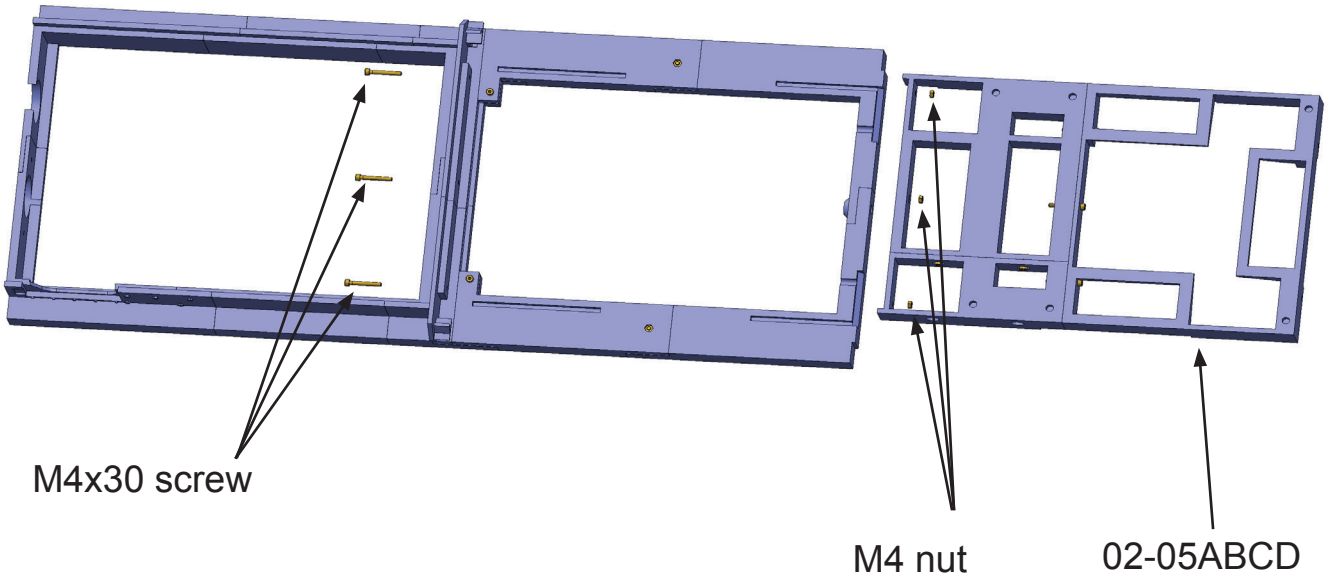

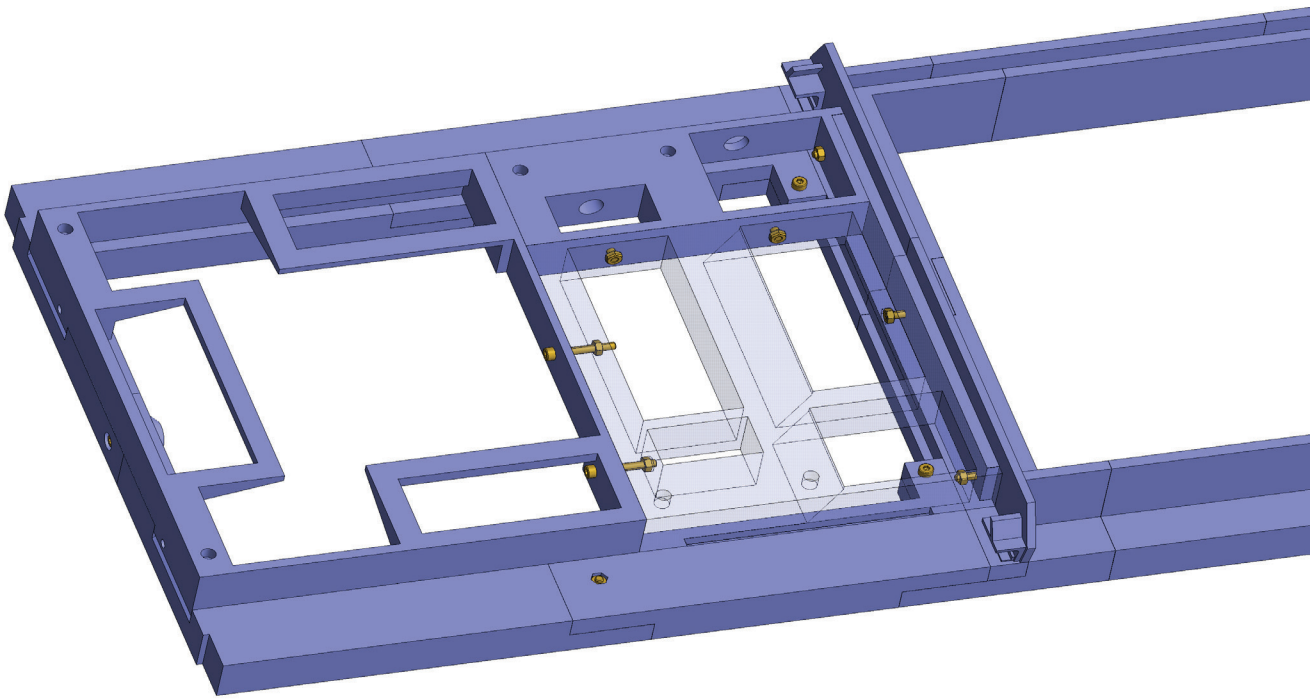

Glue the prepared assemblies of parts 02-05A, 02-05B, 02-05C and 02-05D.
Secure the whole parts assemblies with M4x30 screws and M4 nuts.

Assembly 02 - Upper Hull

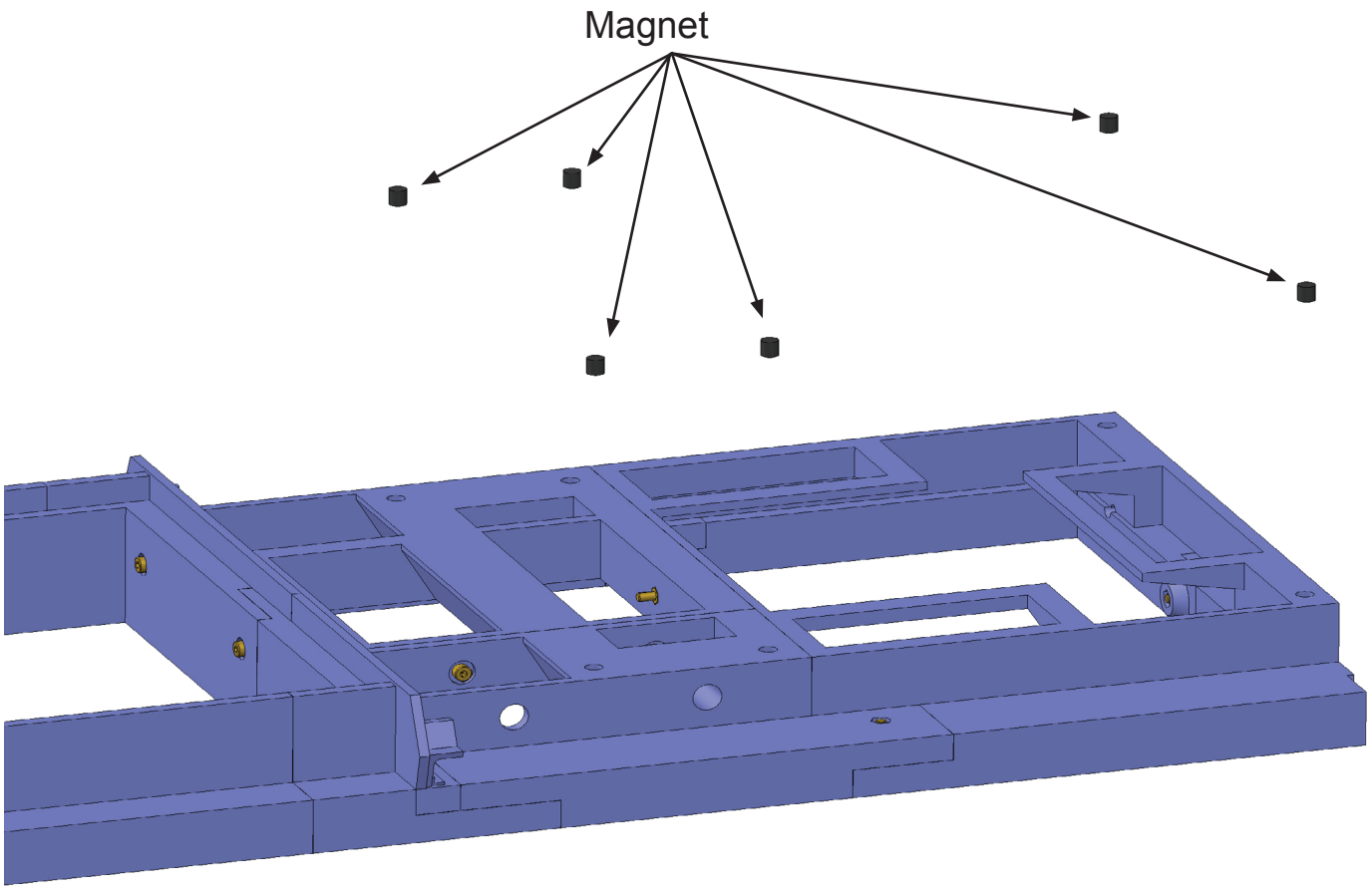

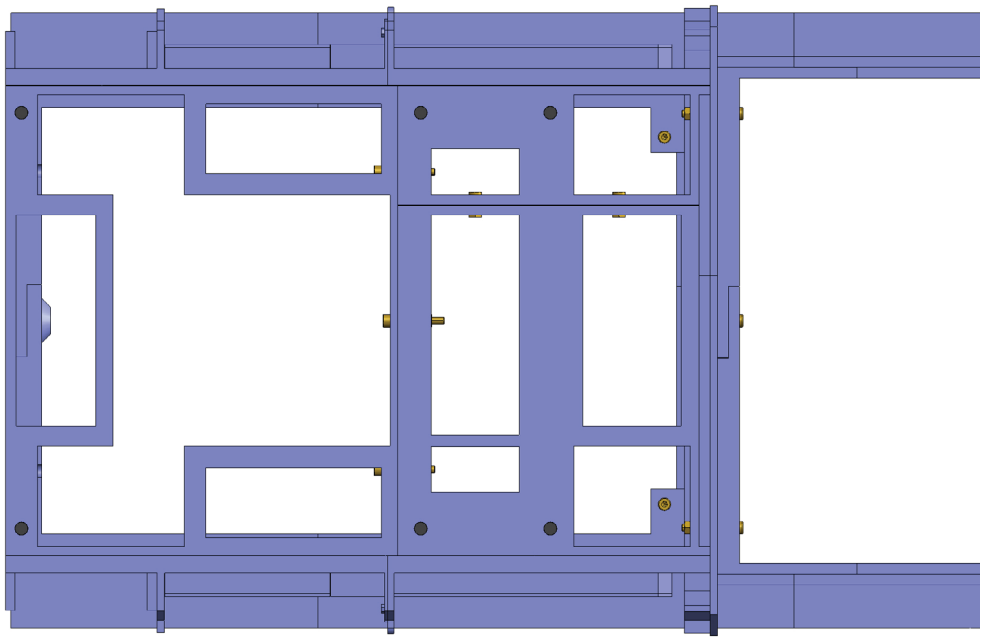

Glue 6 magnets with a diameter of 7mm and a length of 6mm.
In the figure below - a view of the installed magnets.

Assembly 02 - Upper Hull

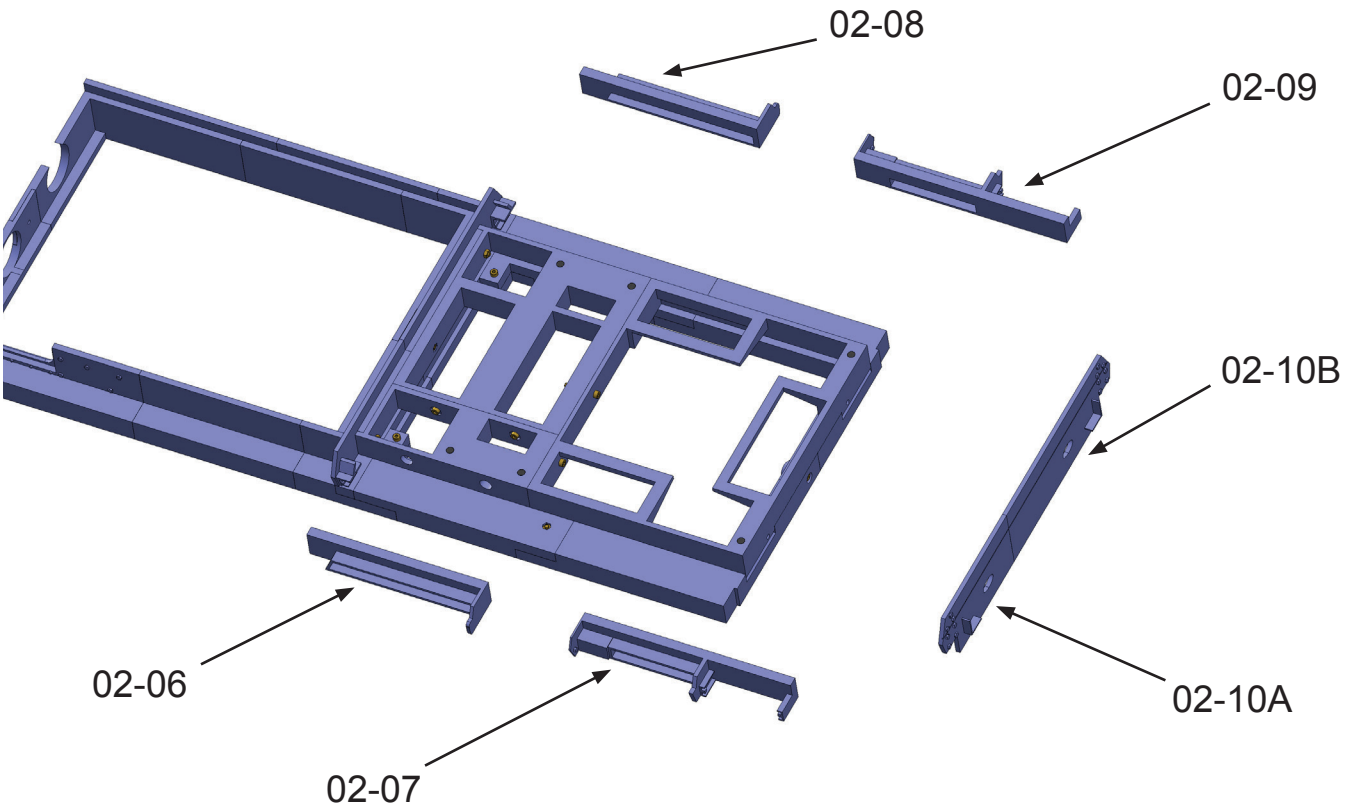

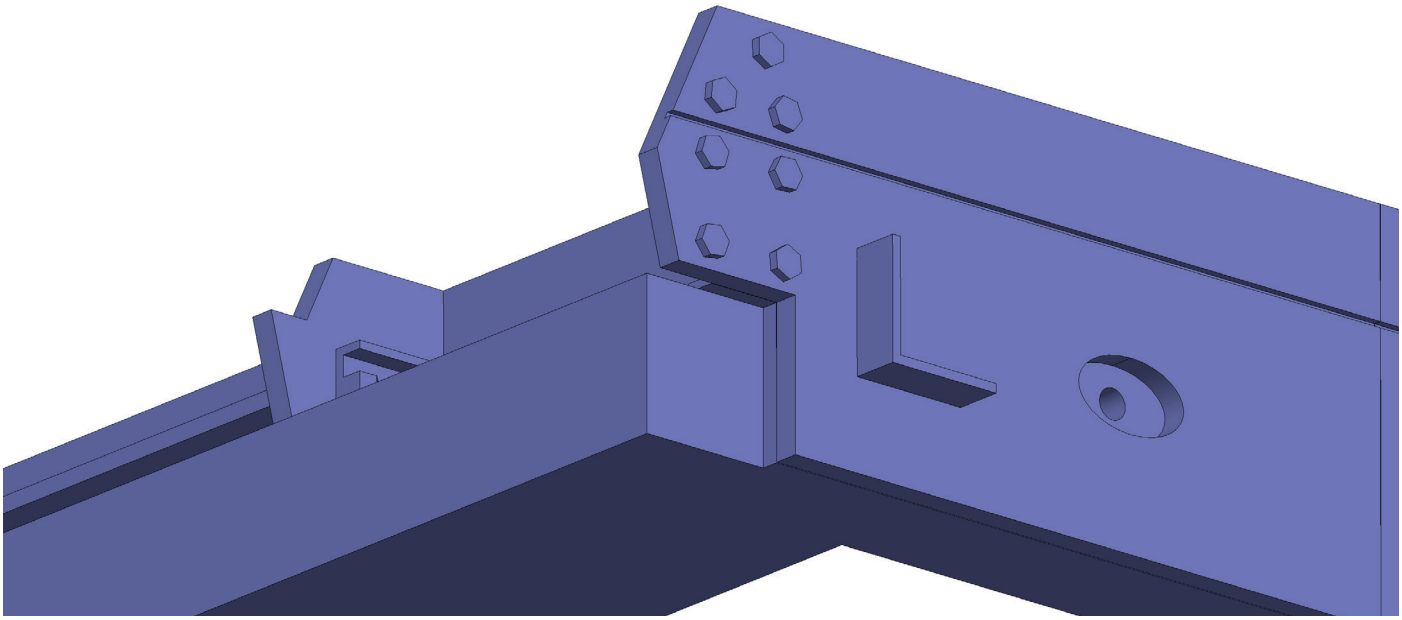

Glue parts 02-06, 02-07, 02-08, 02-09, 02-10A and 02-10B.
IF YOU HAVE BIG PRINTER, USE PART 02-10AB.

Assembly 02 - Upper Hull

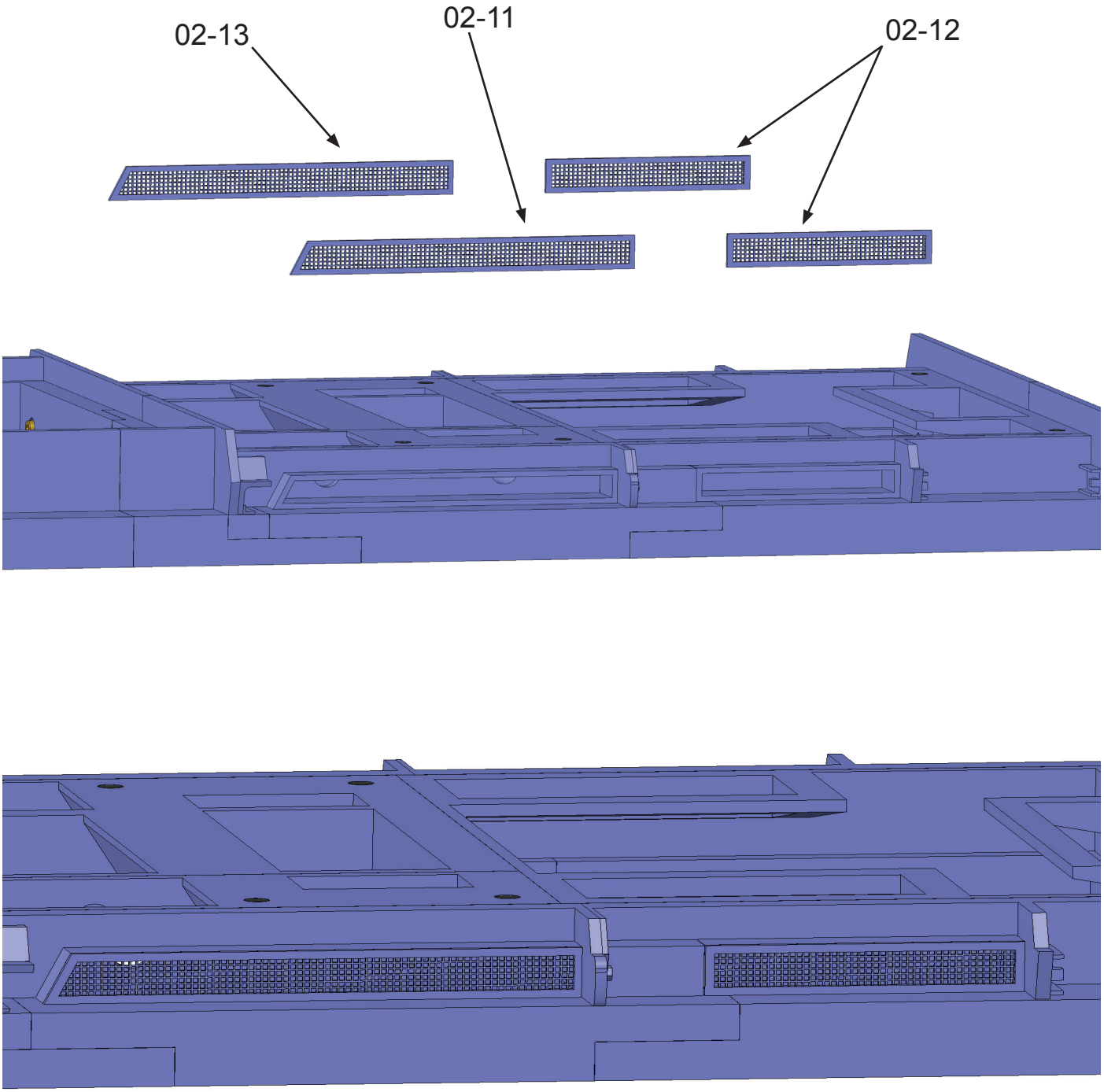

Glue parts 02-11, 02-12 (2x) and 02-13.
You can use alternative parts for a metal grid.

Assembly 02 - Upper Hull

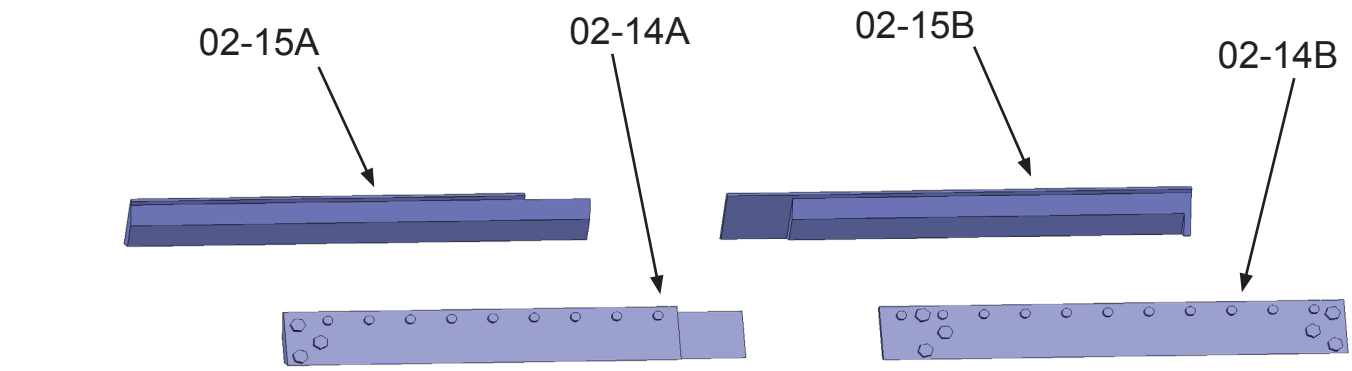

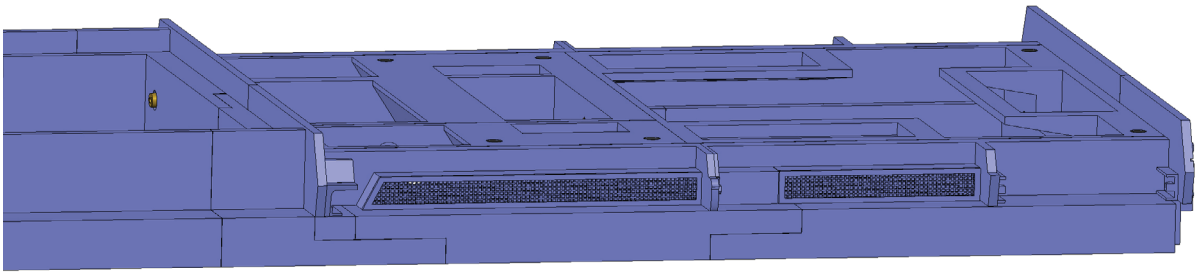

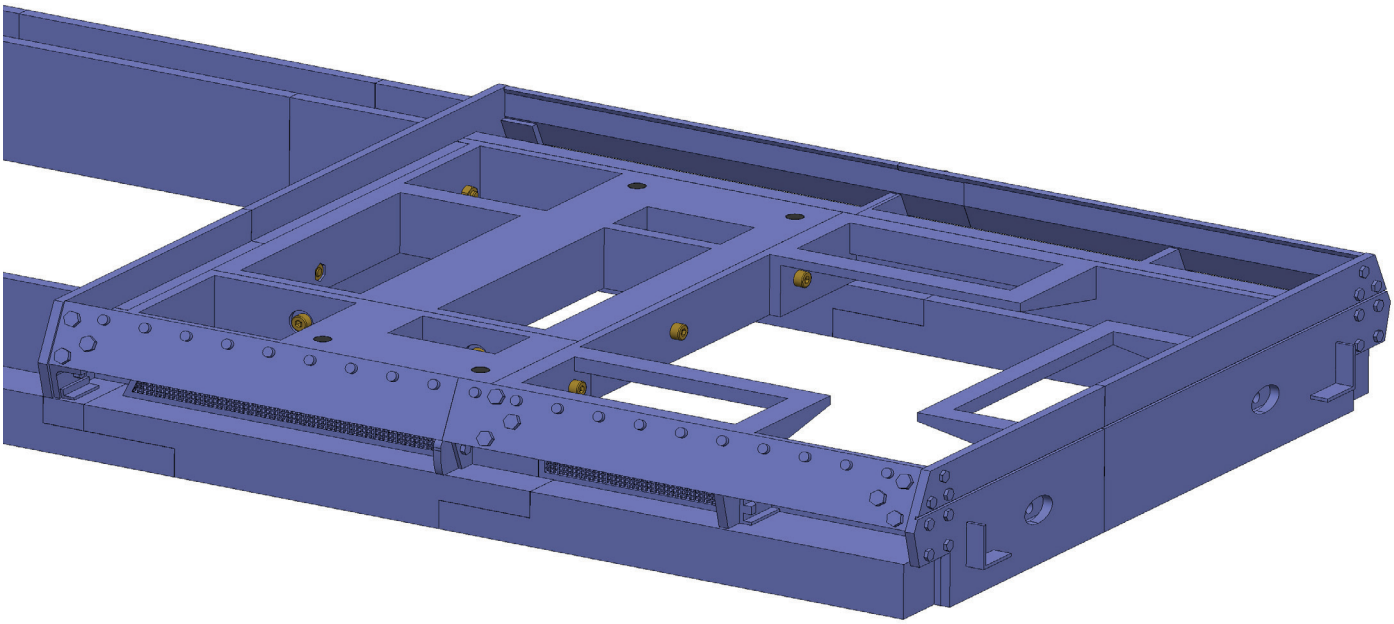

Glue parts 02-14A, 02-14B, 02-15A and 02-15B.
IF YOU HAVE BIG PRINTER, USE PARTS 02-14AB and 02-15AB.

Assembly 02 - Upper Hull

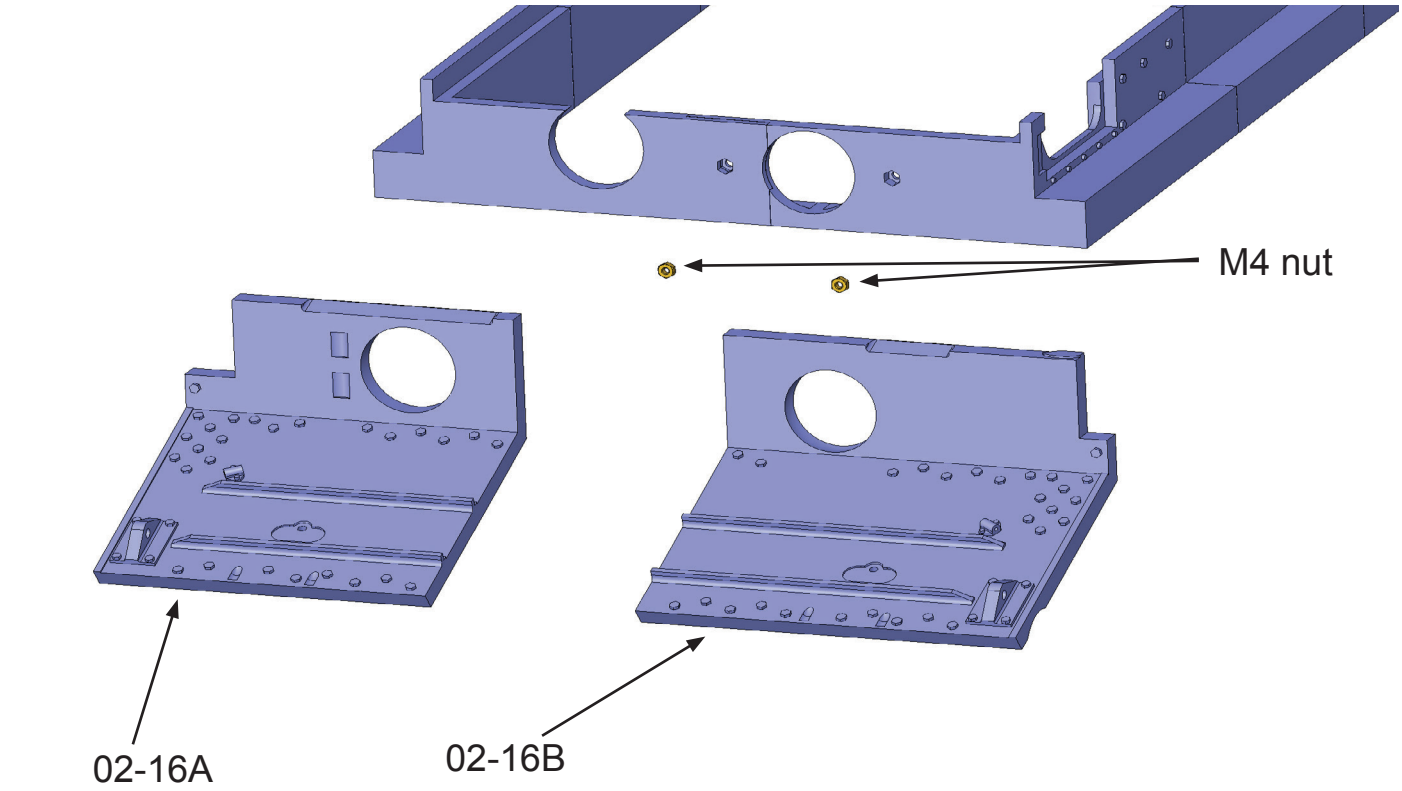

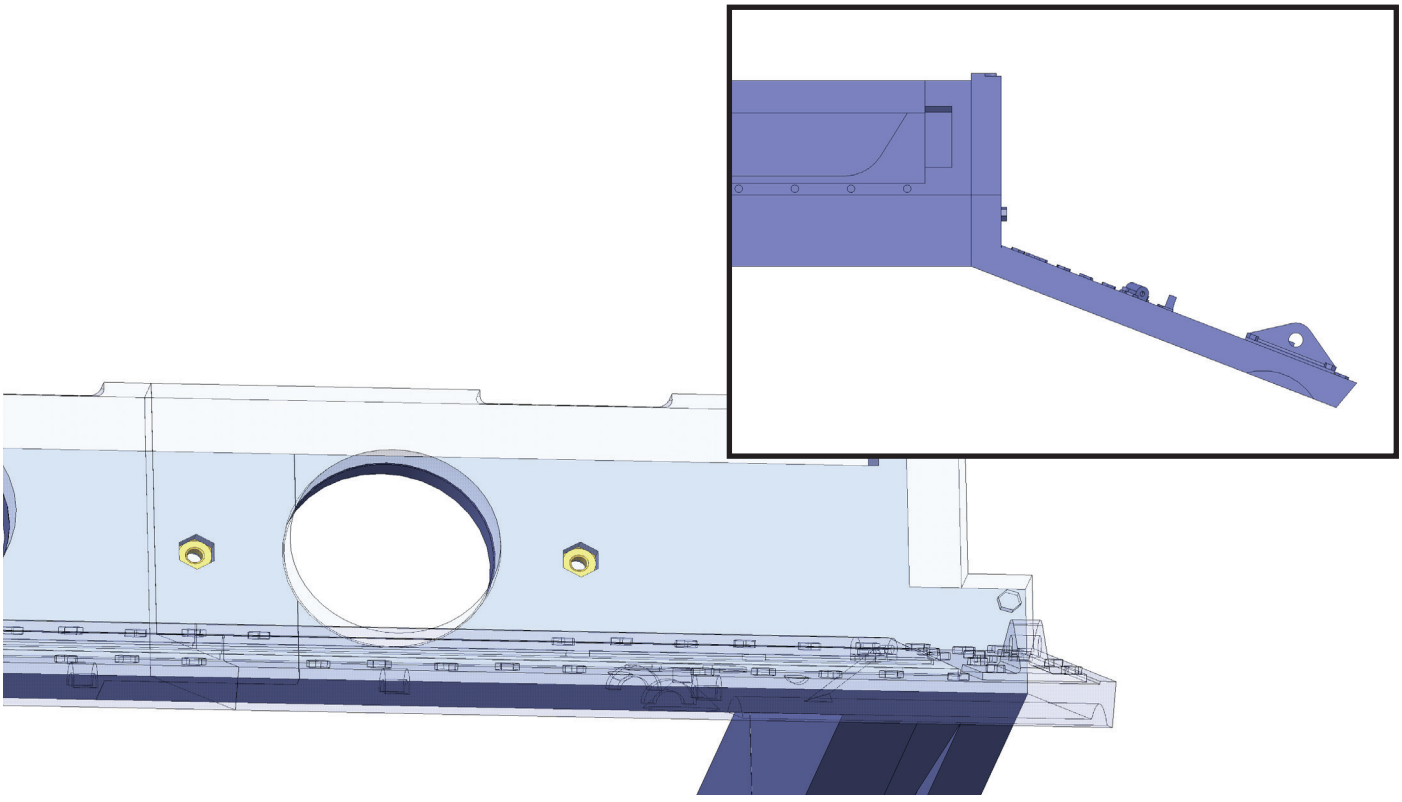

Insert two M4 nuts into part 02-01AB. It will not be possible later.
Glue parts 02-16A and 02-16B.Align the edges as shown below.
IF YOU HAVE BIG PRINTER, USE PART 02-16AB.

Assembly 02 - Upper Hull

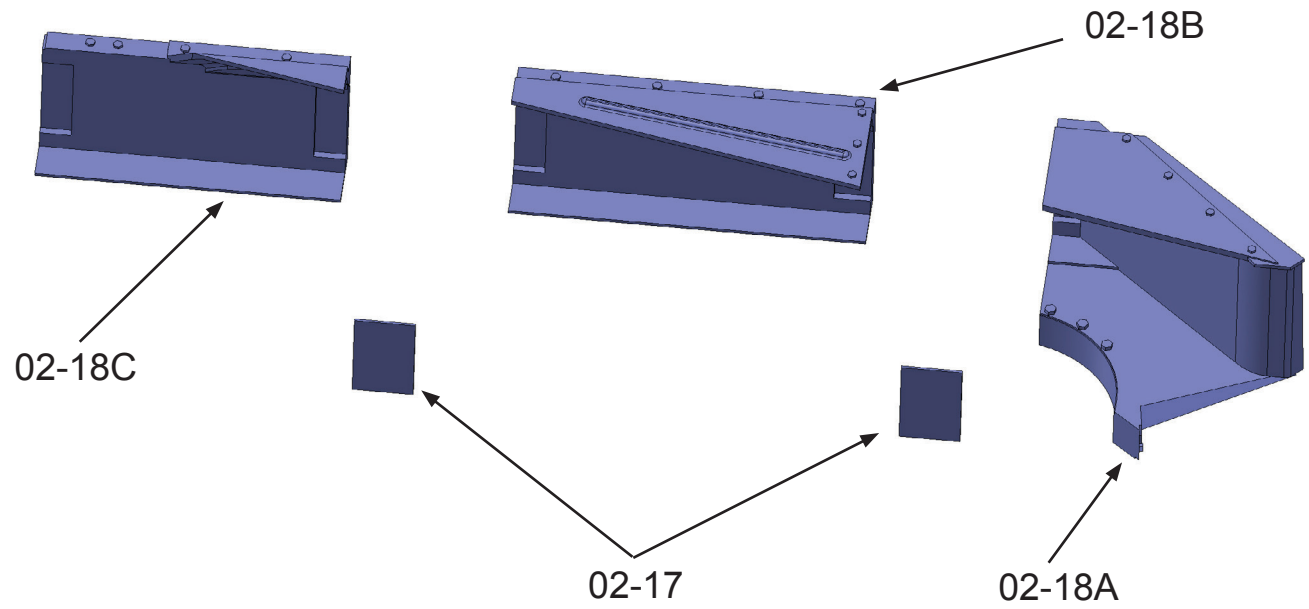

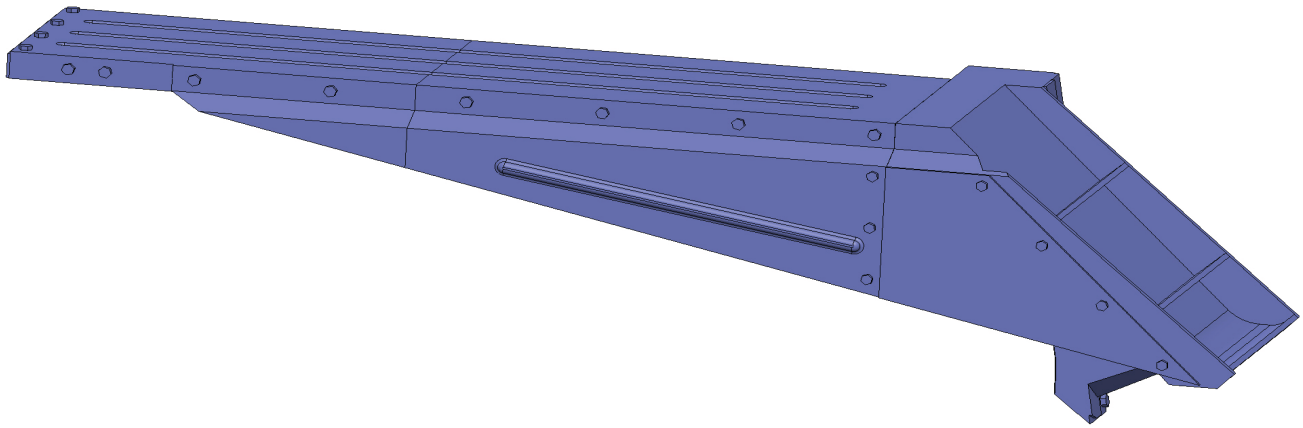

Glue parts 02-17 (2x), 02-18A, 02-18B and 02-18C.

Assembly 02 - Upper Hull

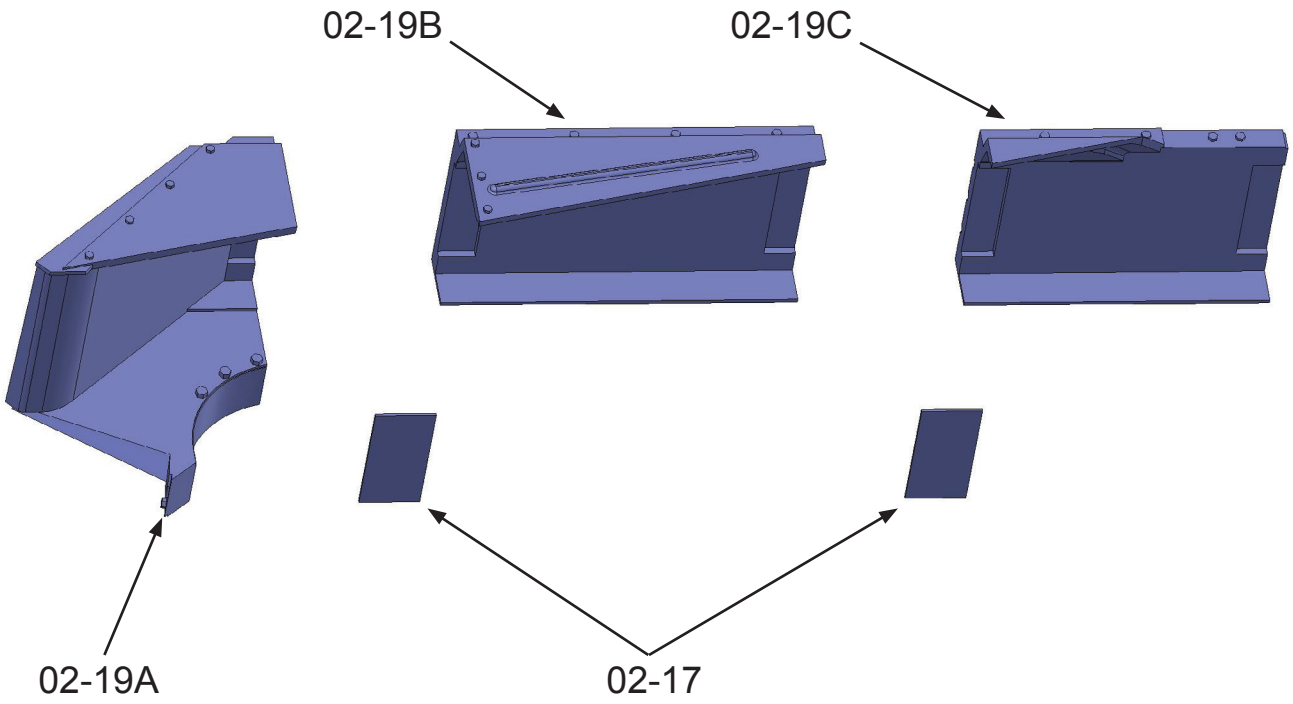

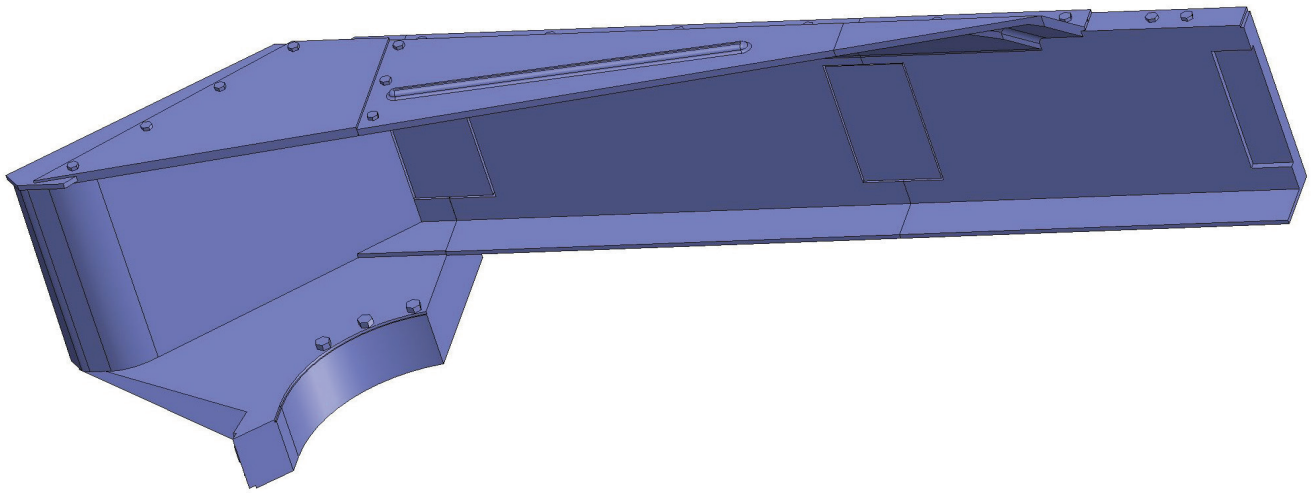

Glue parts 02-17 (2x), 02-19A, 02-19B and 02-19C.

Assembly 02 - Upper Hull

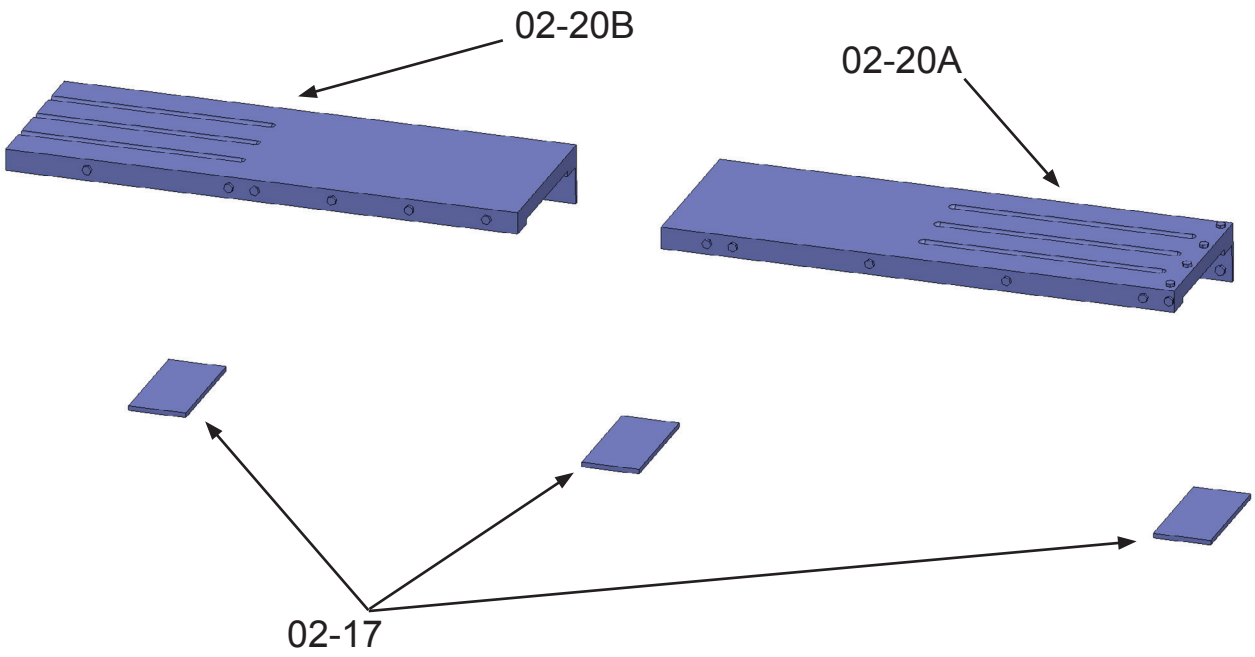

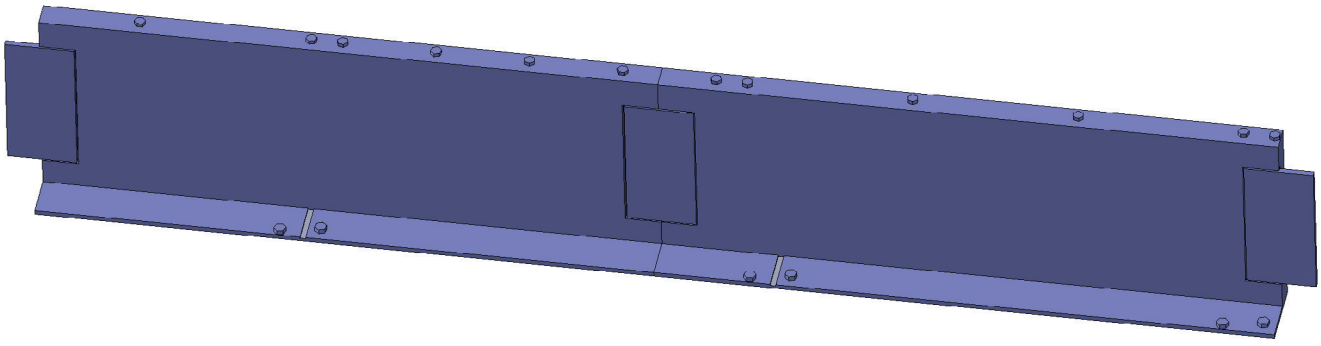

Glue parts 02-17 (3x), 02-20A and 02-20B.

Assembly 02 - Upper Hull

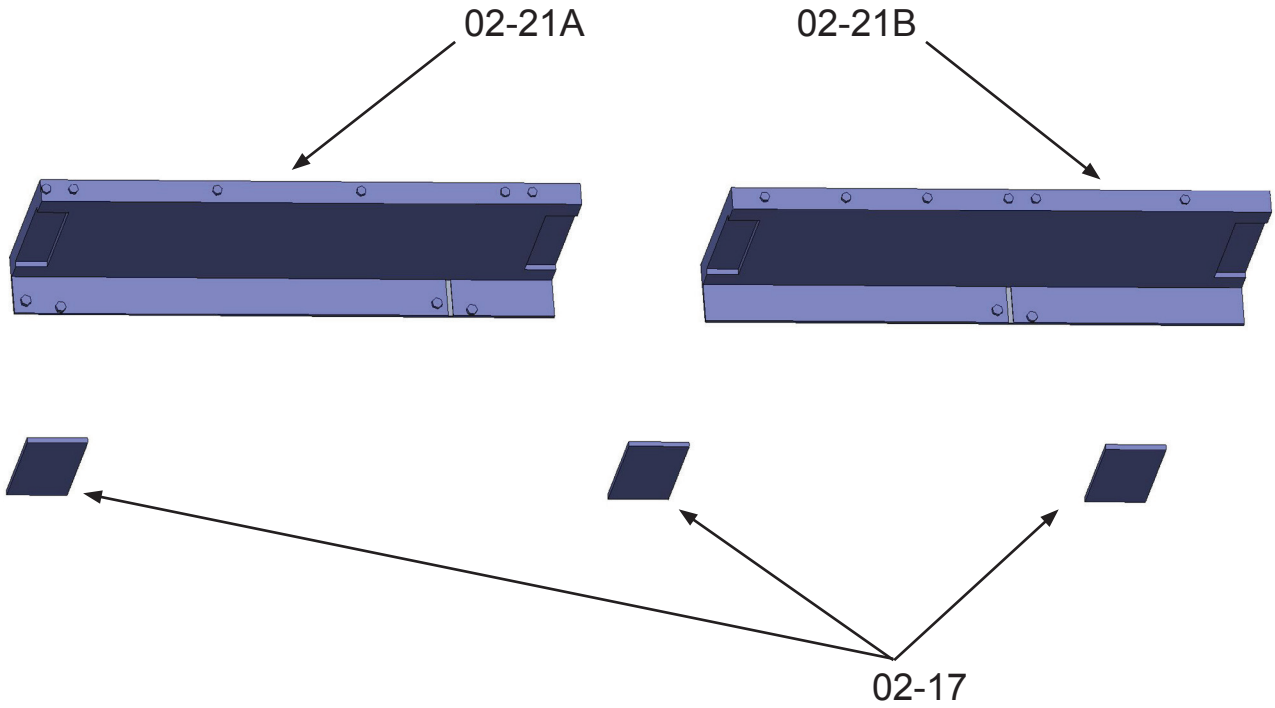

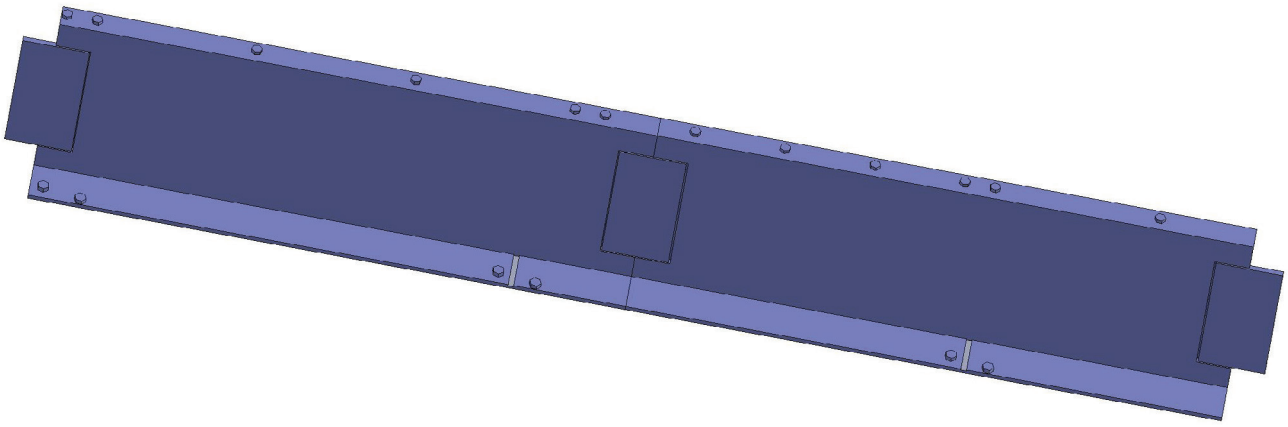

Glue parts 02-17 (3x), 02-21A and 02-21B.

Assembly 02 - Upper Hull

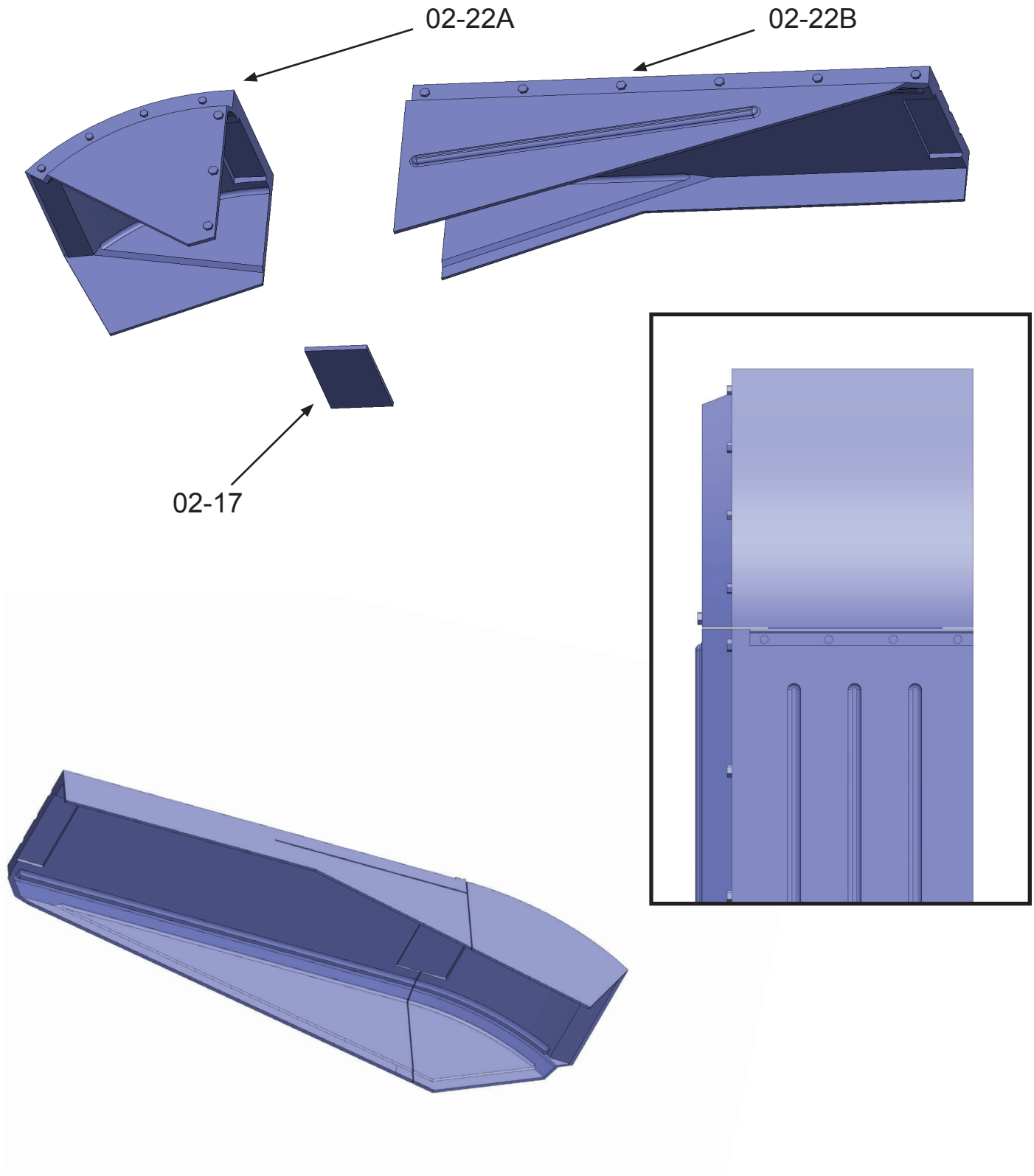

Glue parts 02-17, 02-22A and 02-22B.

Assembly 02 - Upper Hull

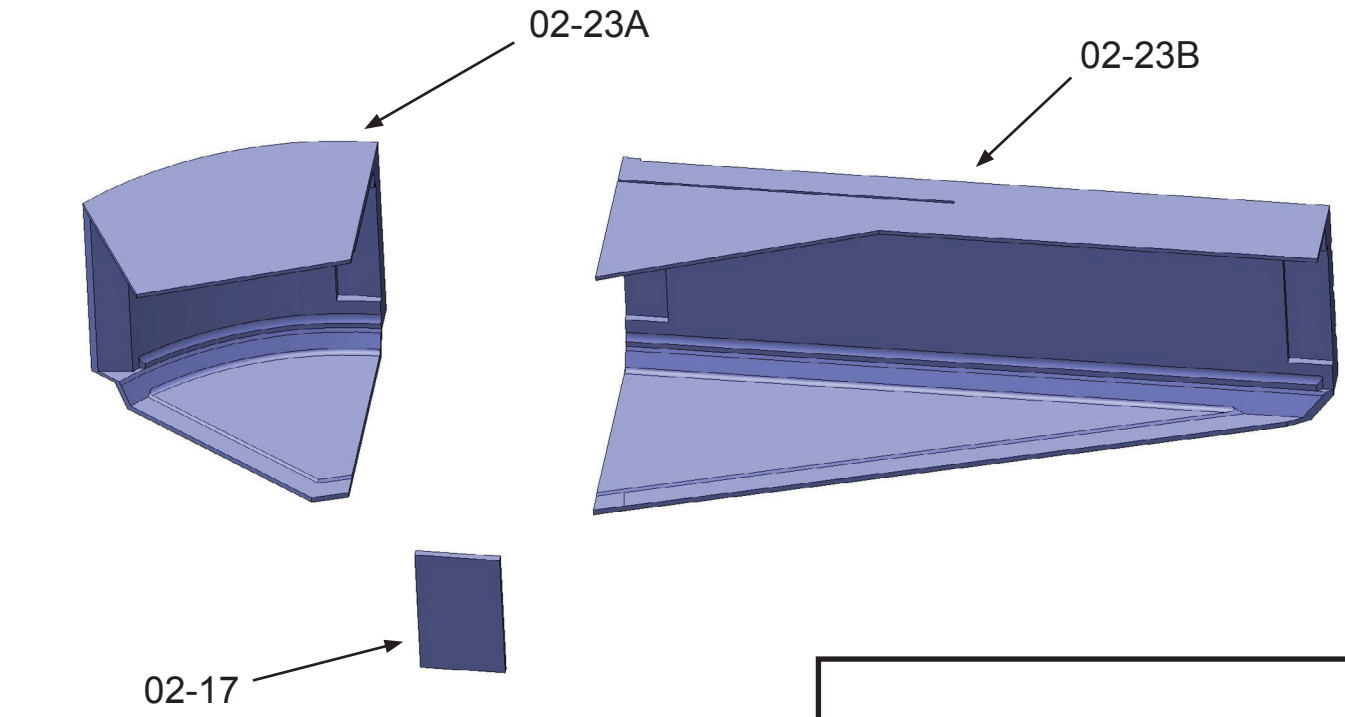

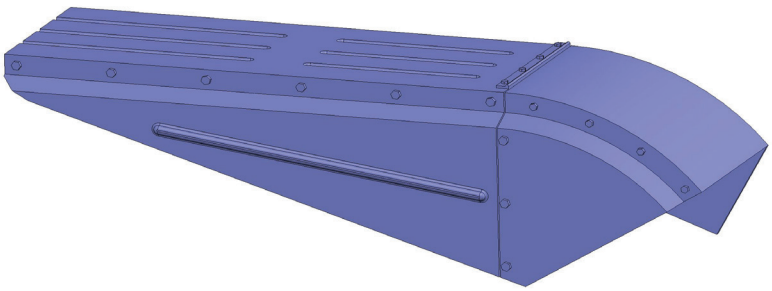

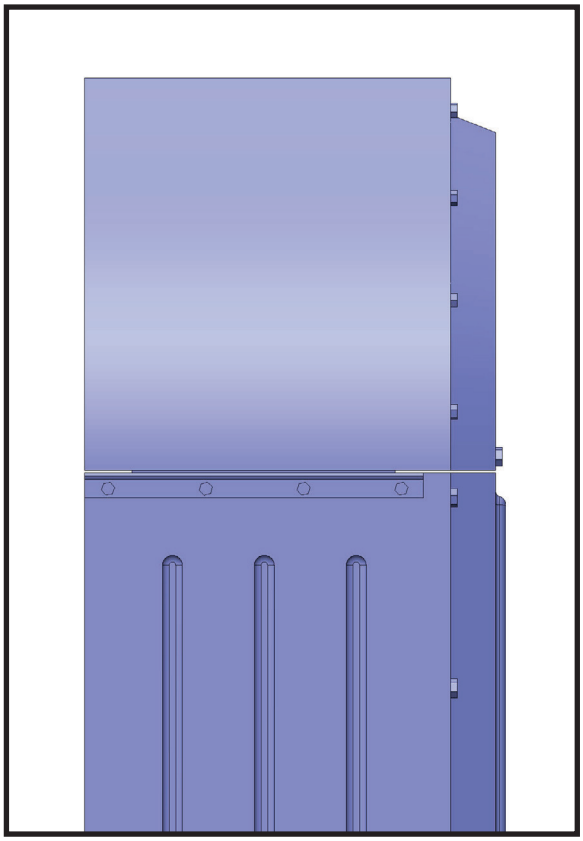

Glue parts 02-17, 02-23A and 02-23B.

Assembly 02 - Upper Hull

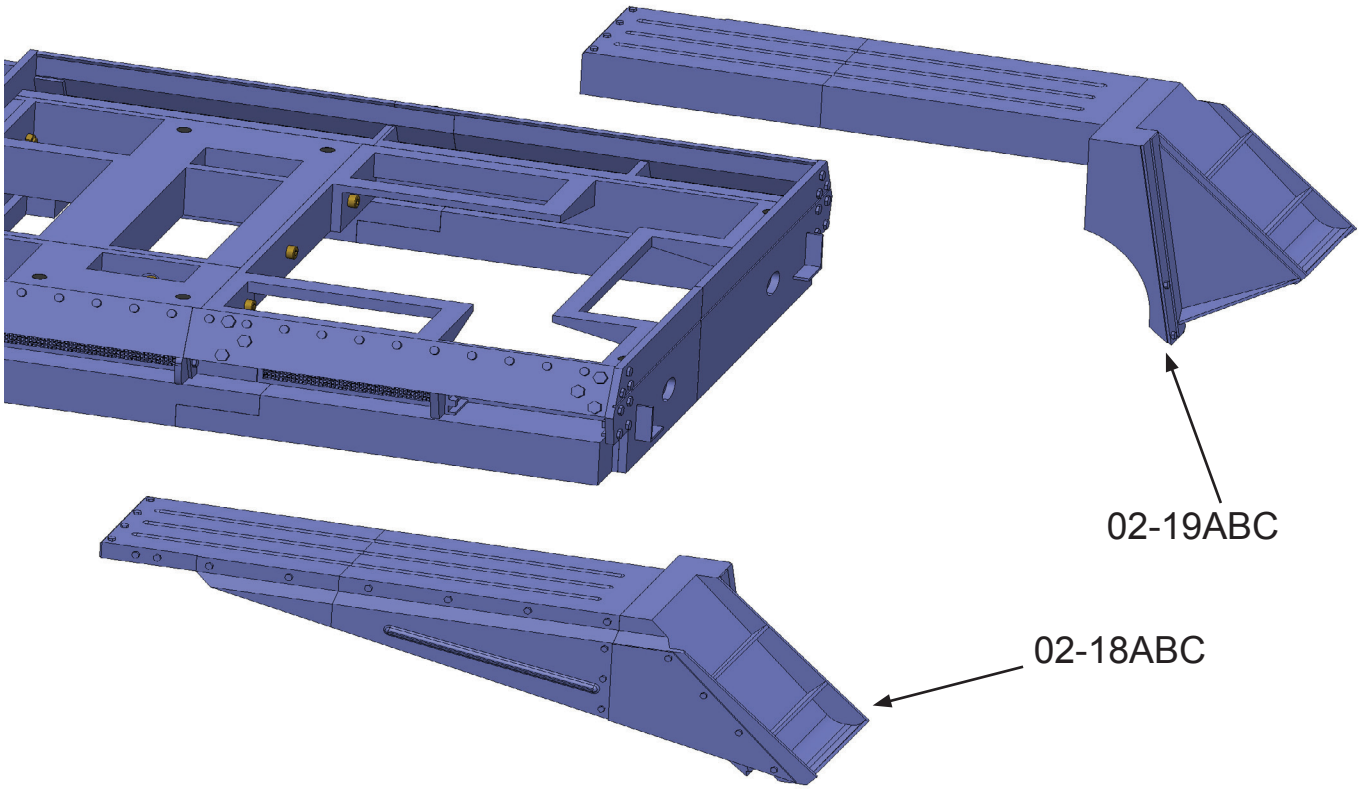

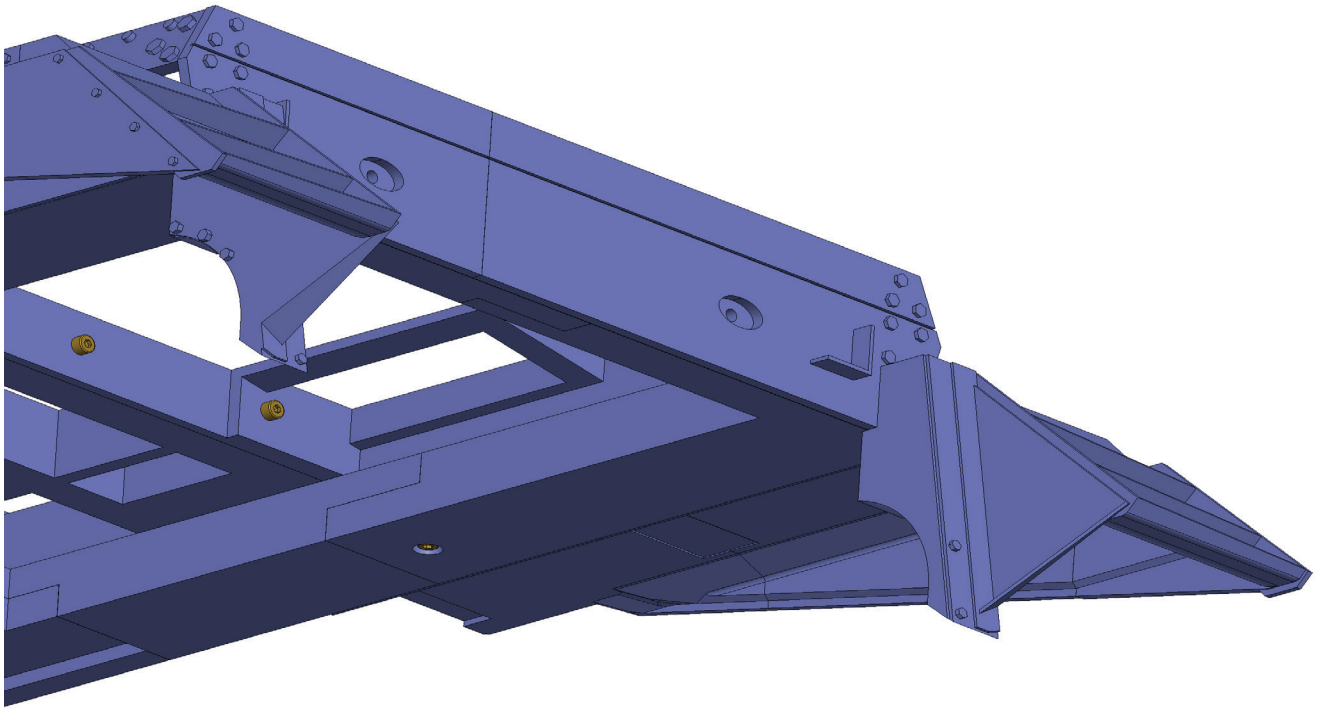

Glue the parts assemblies 02-18ABC and 02-19ABC to the hull.

Assembly 02 - Upper Hull

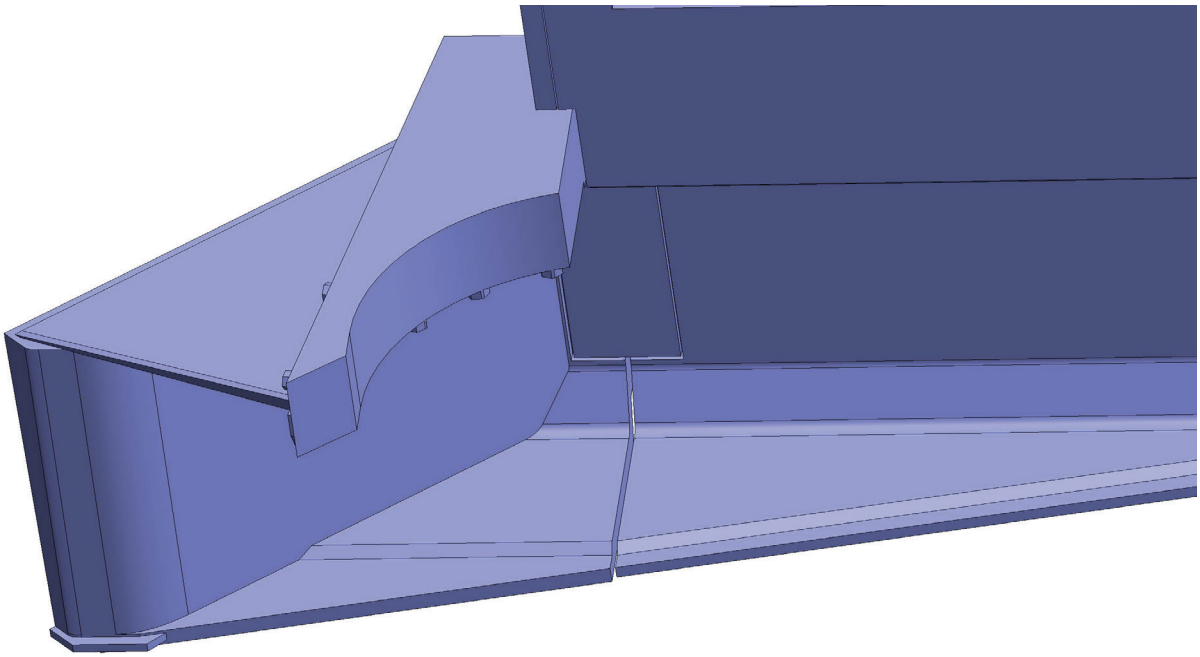

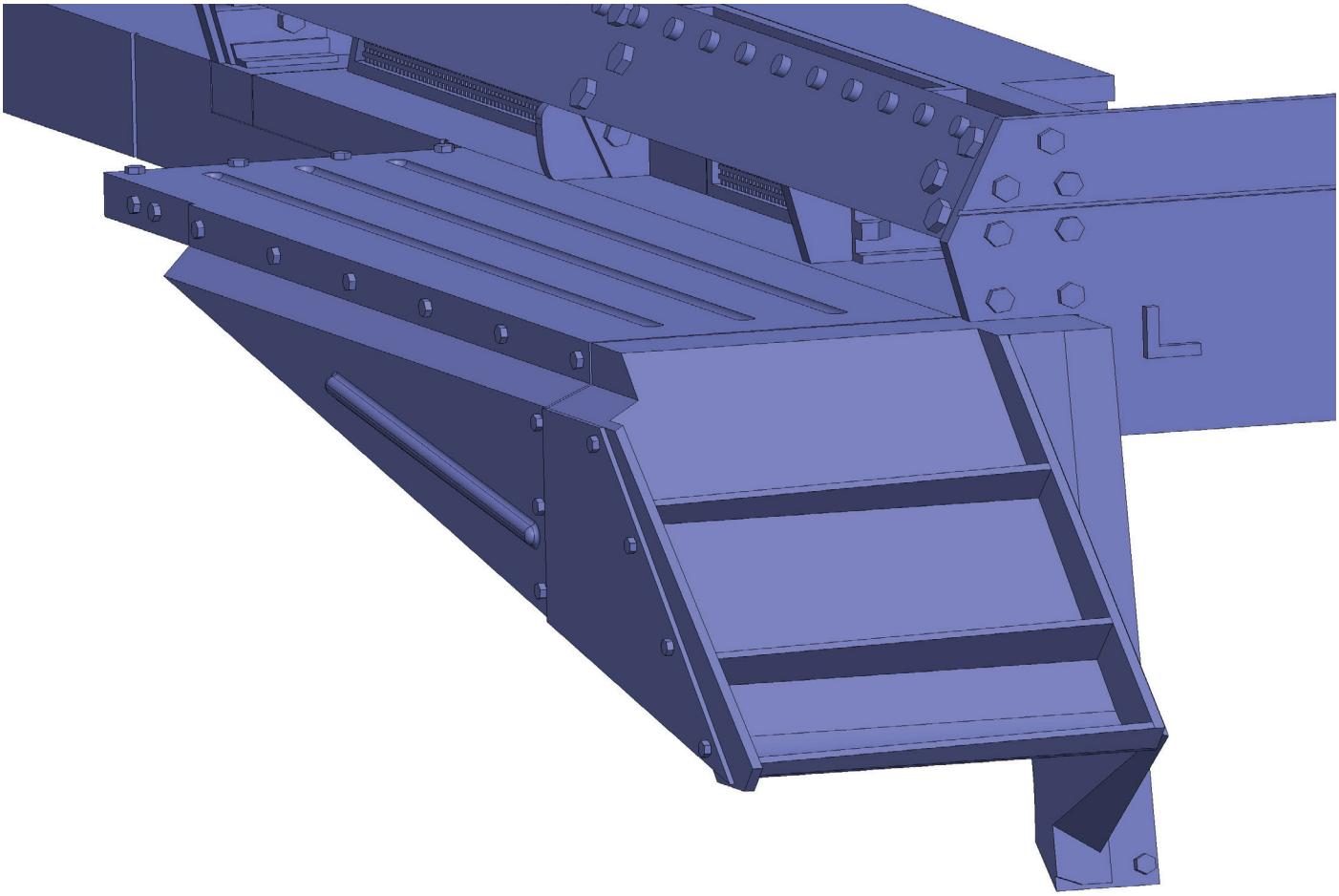

Auxiliary views for gluing parts 02-18ABC and 02-19ABC.

Assembly 02 - Upper Hull

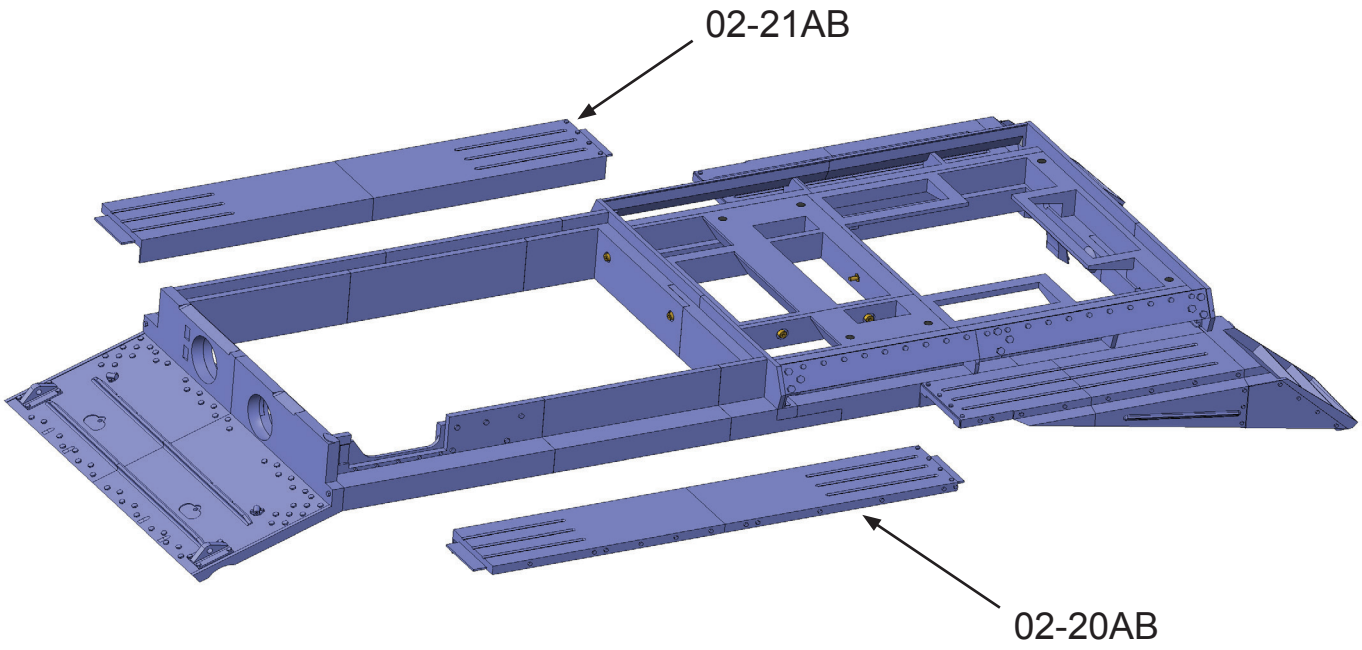

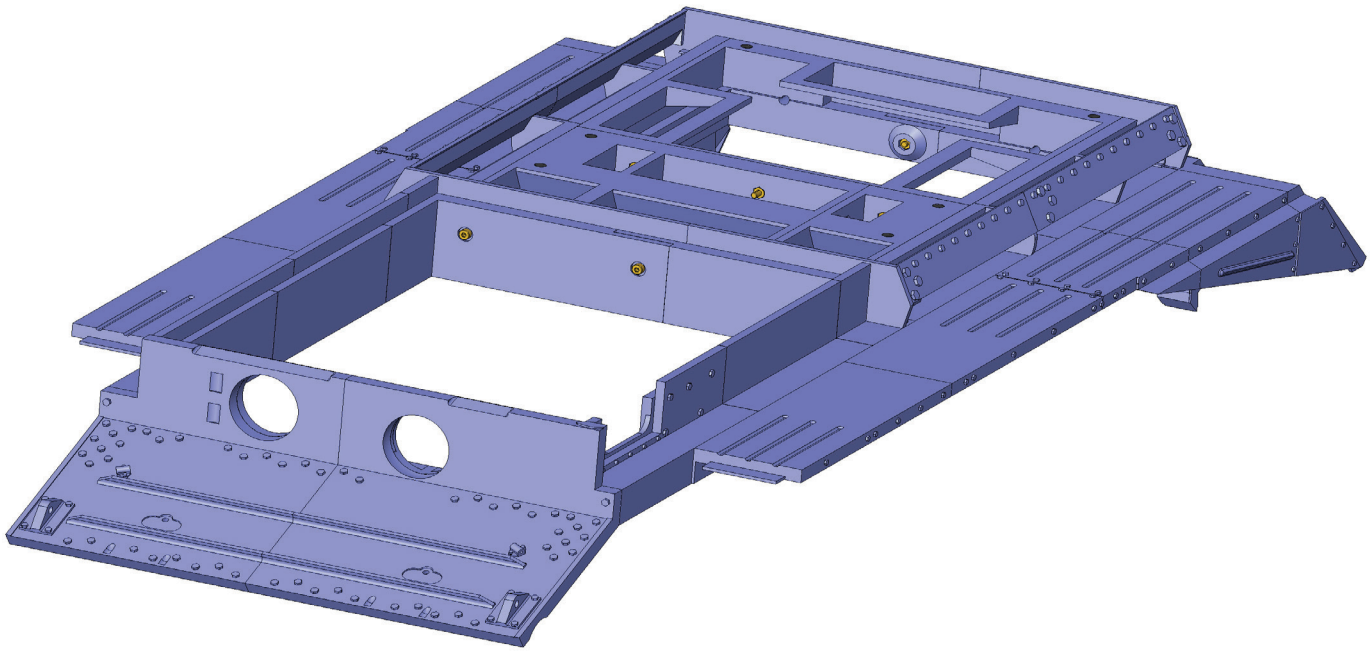

Glue the assemblies of parts 02-20AB and 02-21AB.

Assembly 02 - Upper Hull

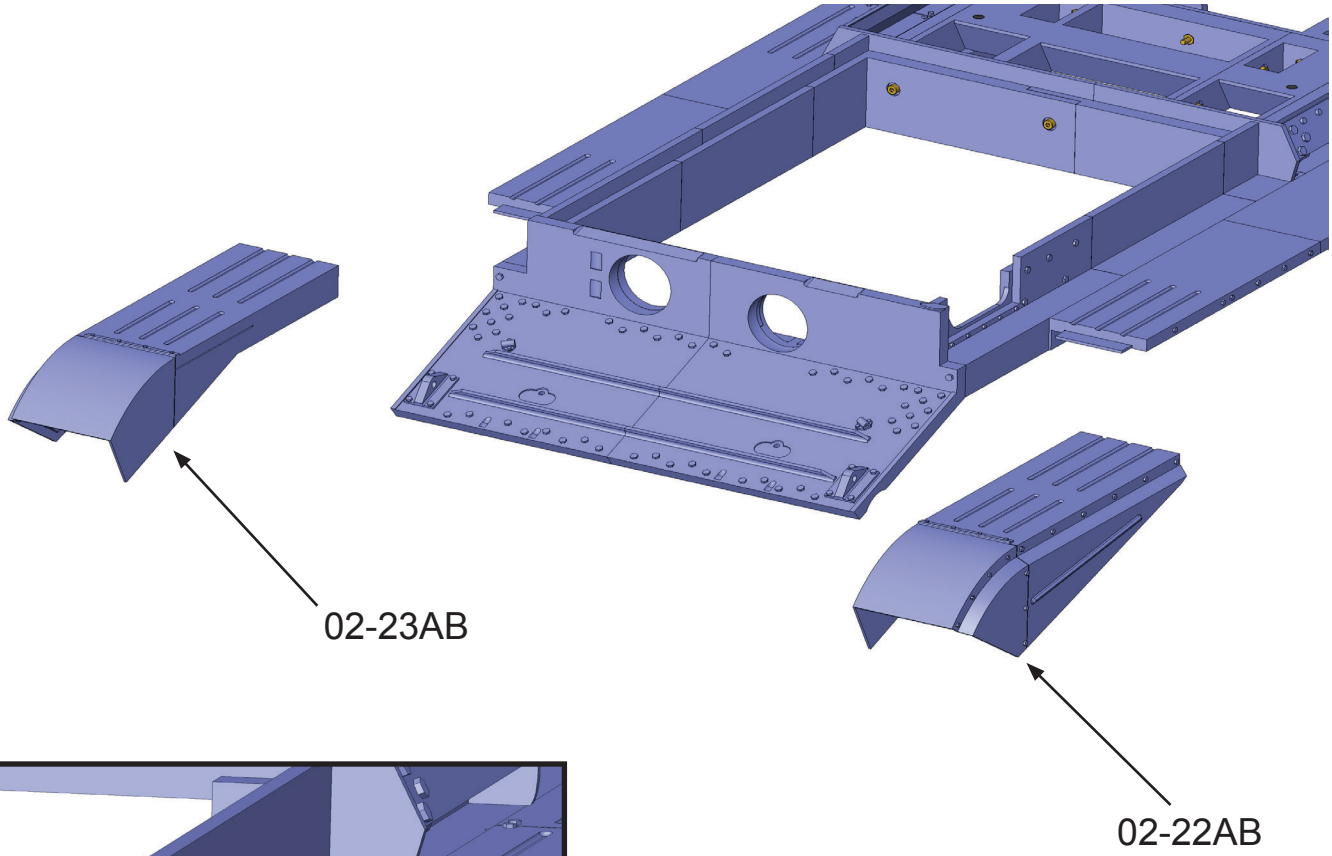

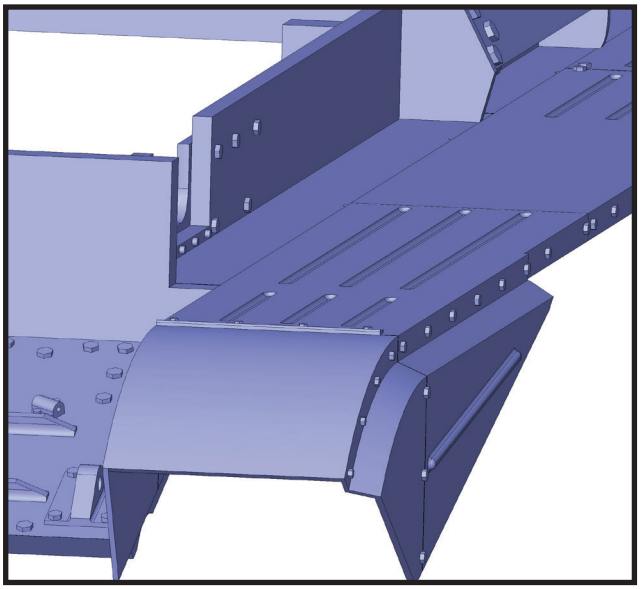

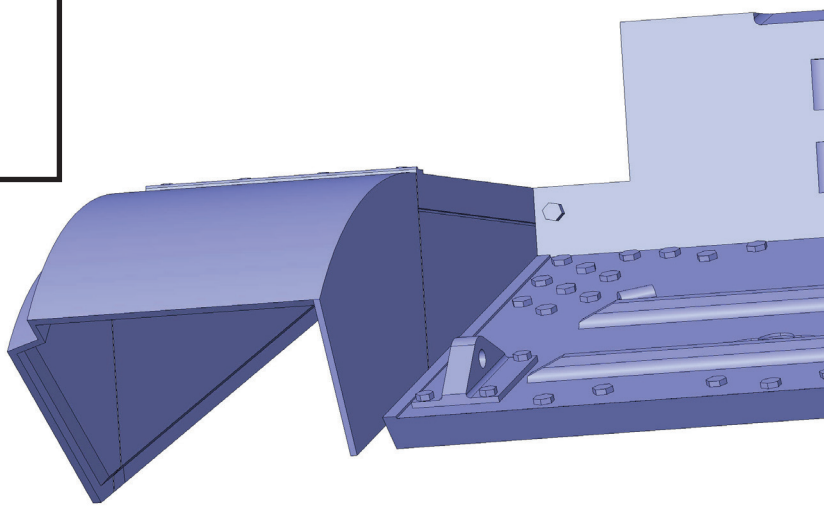

Glue the assemblies of parts 02-22AB and 02-23AB.

Assembly 02 - Upper Hull

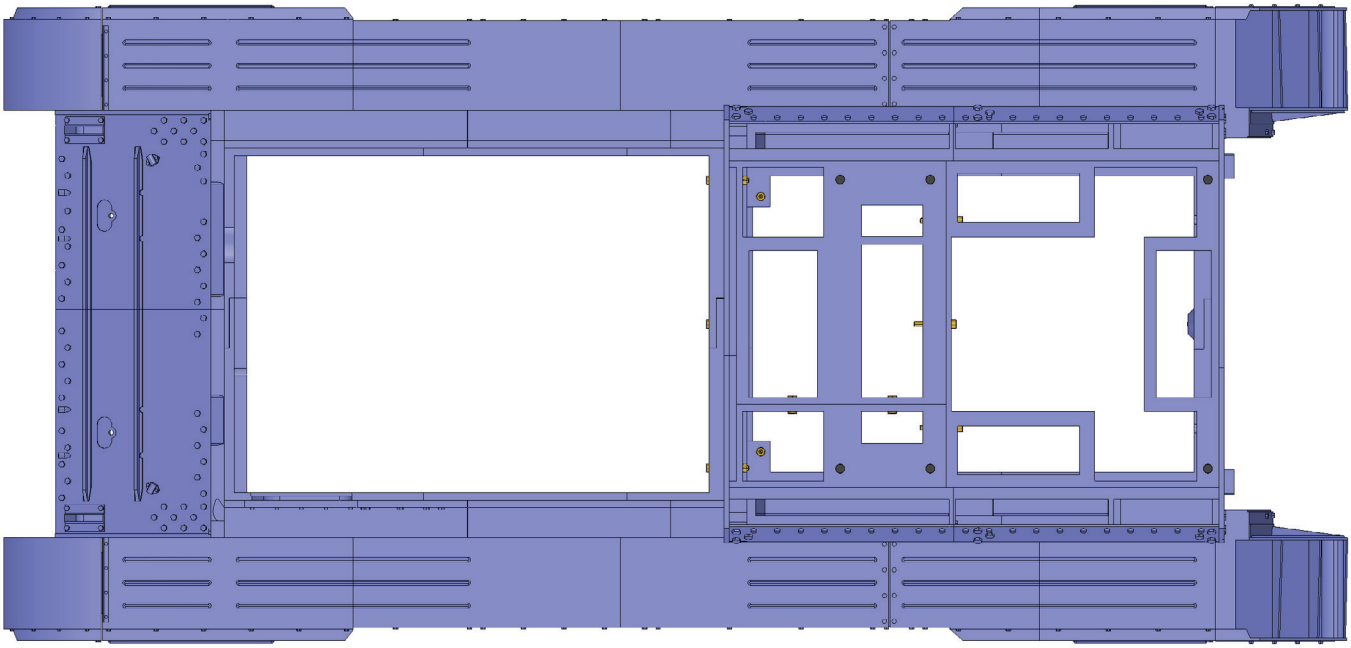

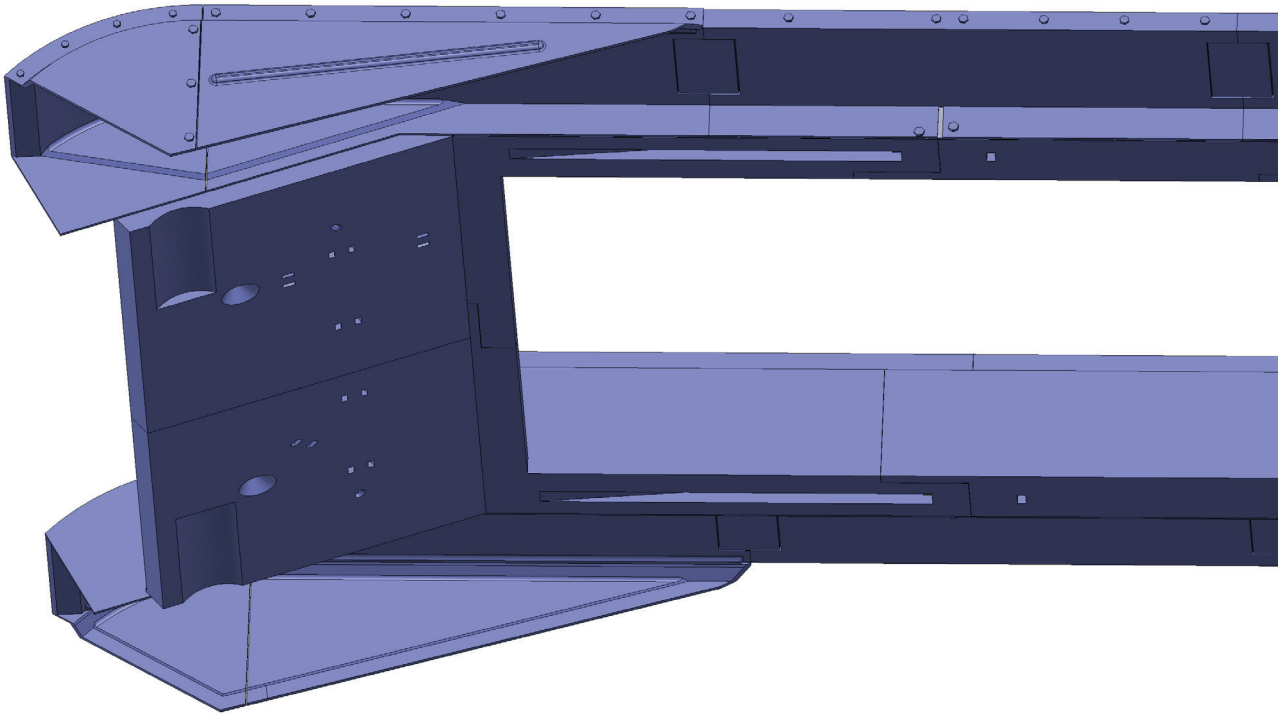

Auxiliary views for gluing parts 02-22AB and 02-23AB.

Assembly 02 - Upper Hull

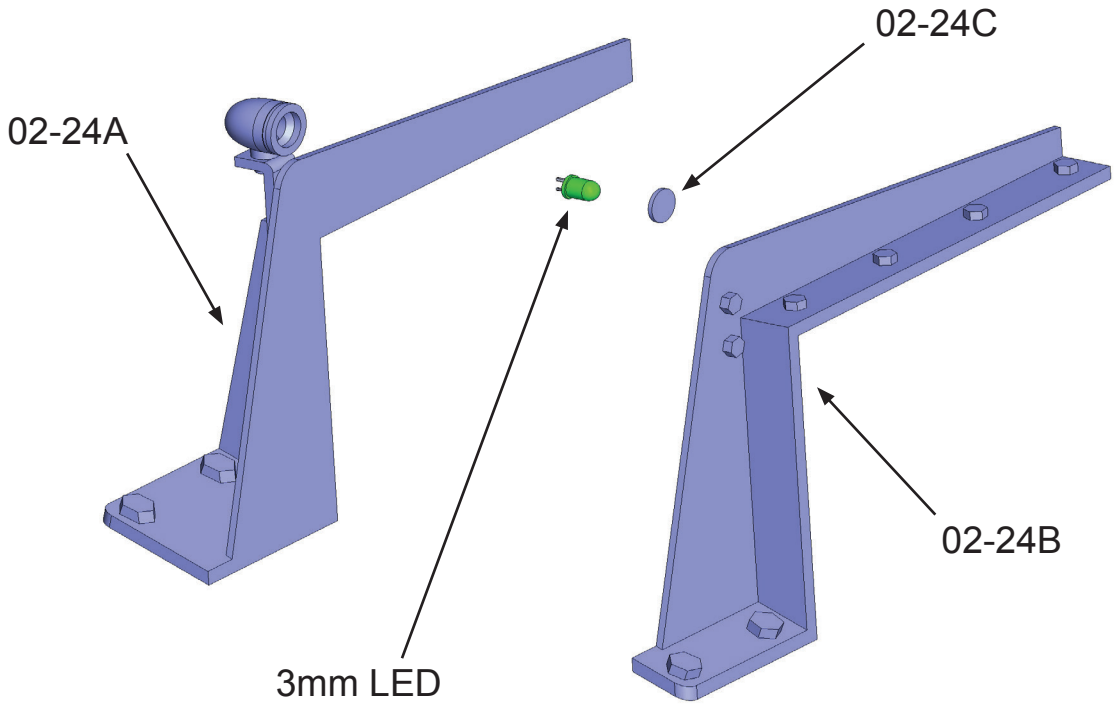

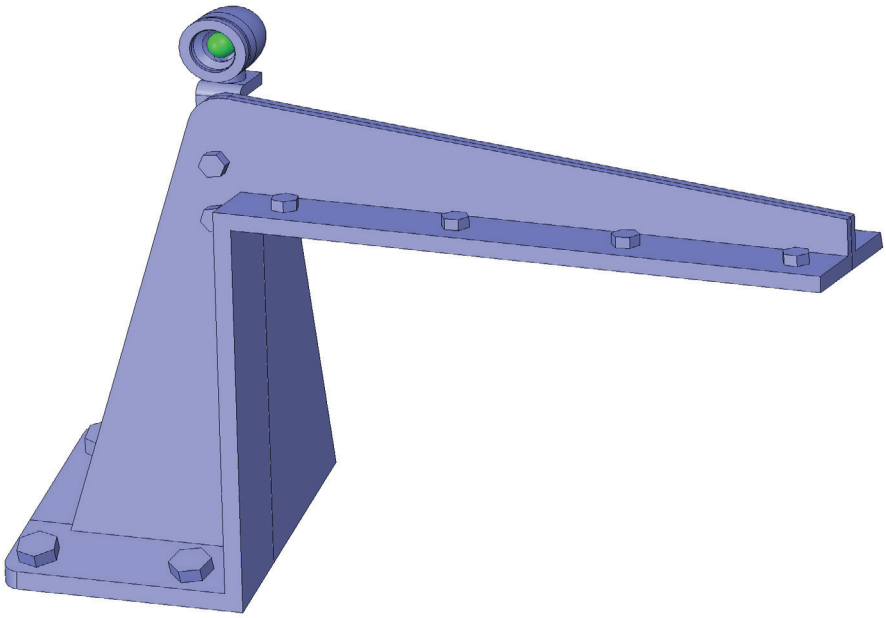

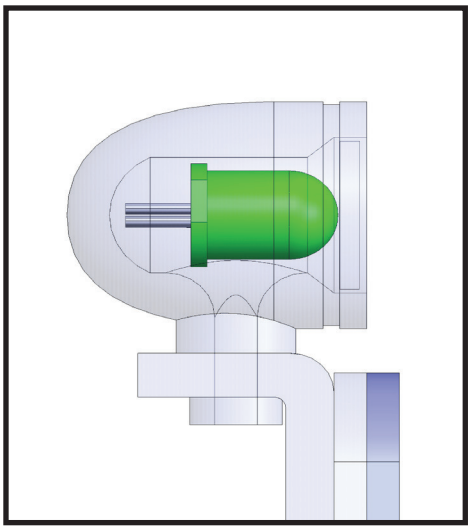

According to the documentation, solder the wires to the 3mm diode.
We recommend wires with a maximum diameter of 0.5 mm.
The installation hole for the cables has a diameter of 1.3 mm.
Insert the prepared and tested diode into the part 02-24A.
Seal the unit with the part 02-24C.Glue part 02-24B.

Assembly 02 - Upper Hull

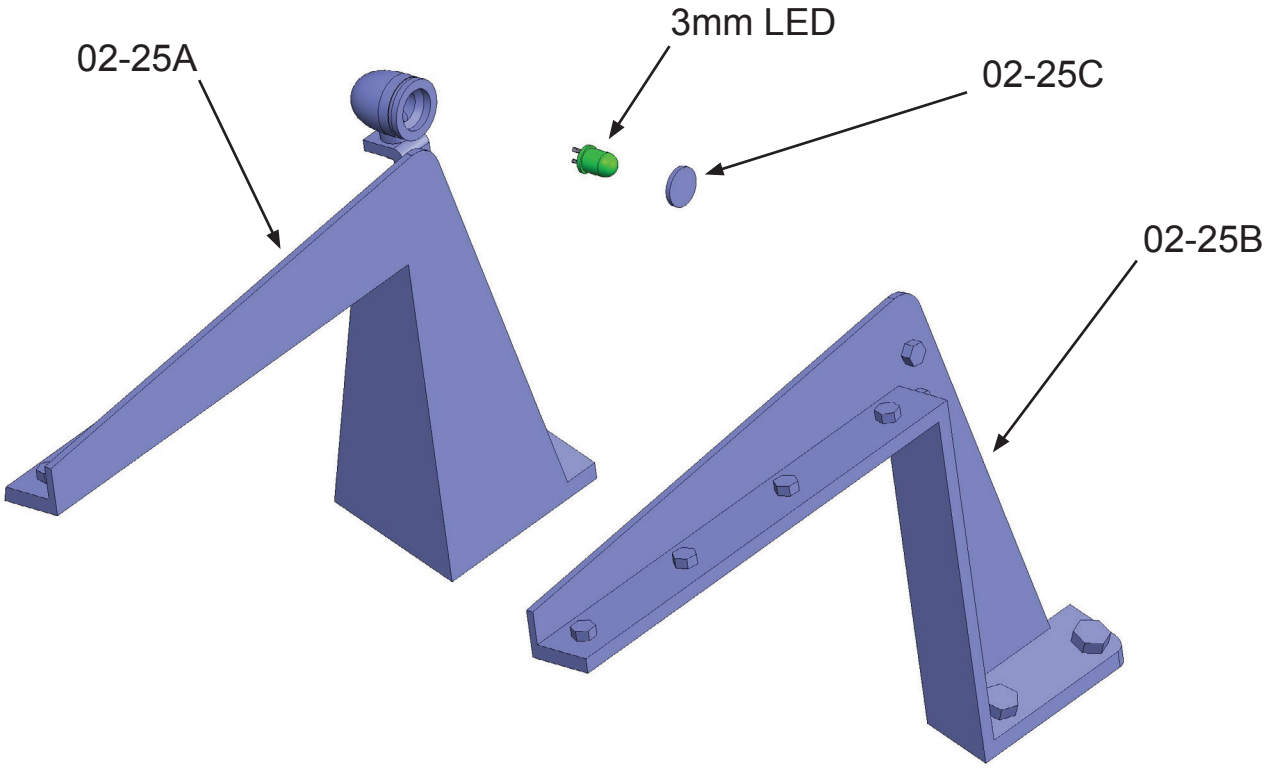

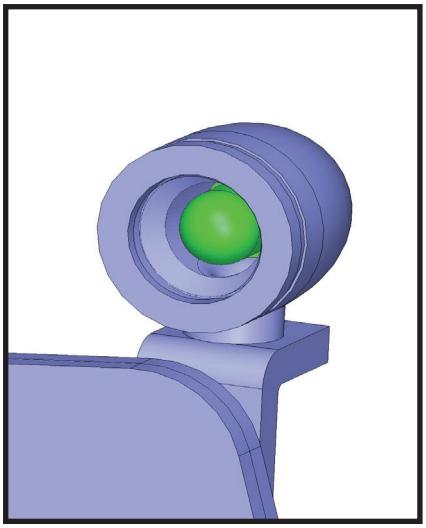

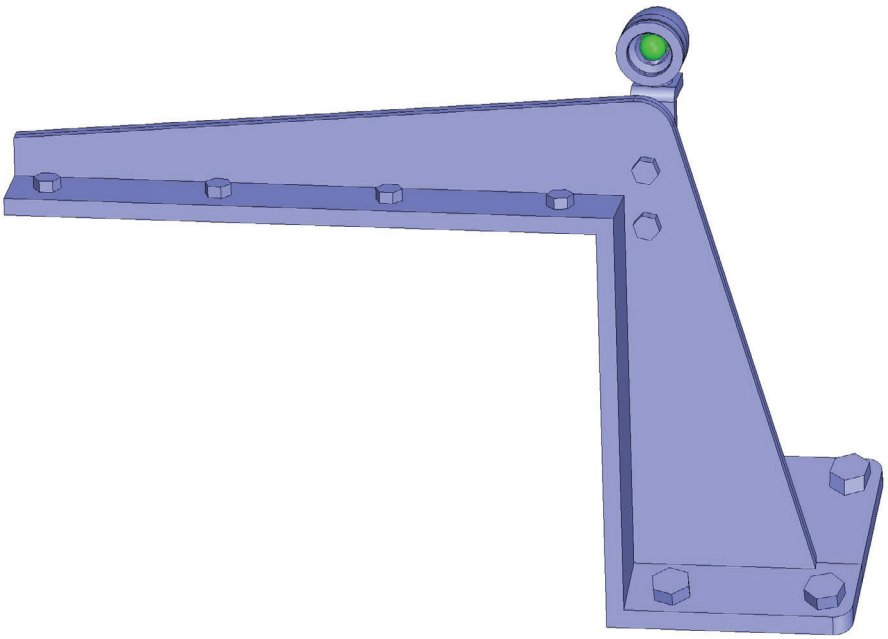

The procedure is similar for the second light.
Insert the prepared and tested diode into the part 02-25A.
Seal the unit with the part 02-25C.Glue part 02-25B.

Assembly 02 - Upper Hull

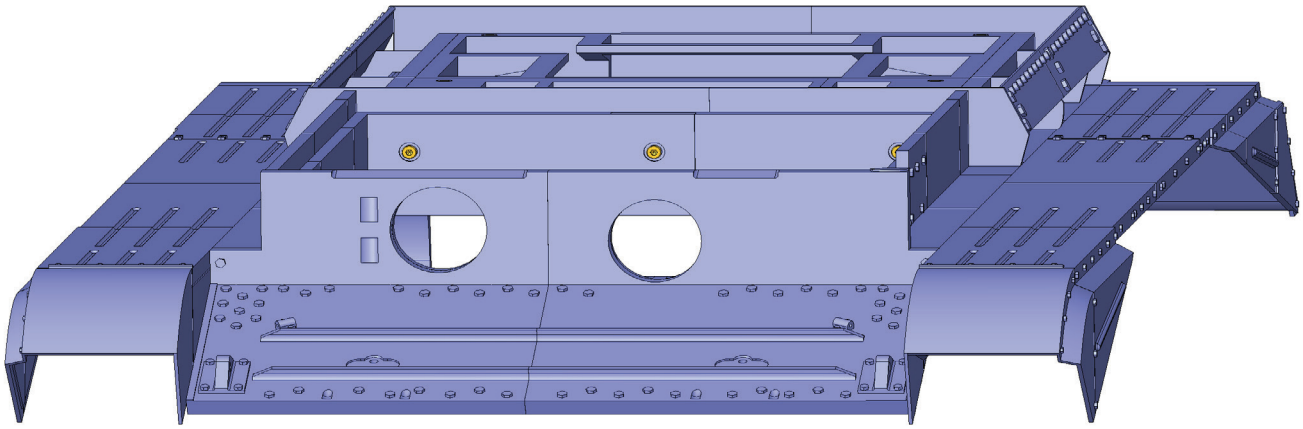

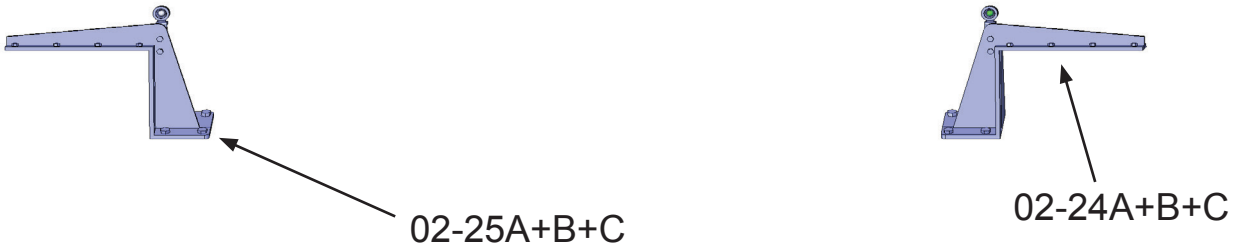

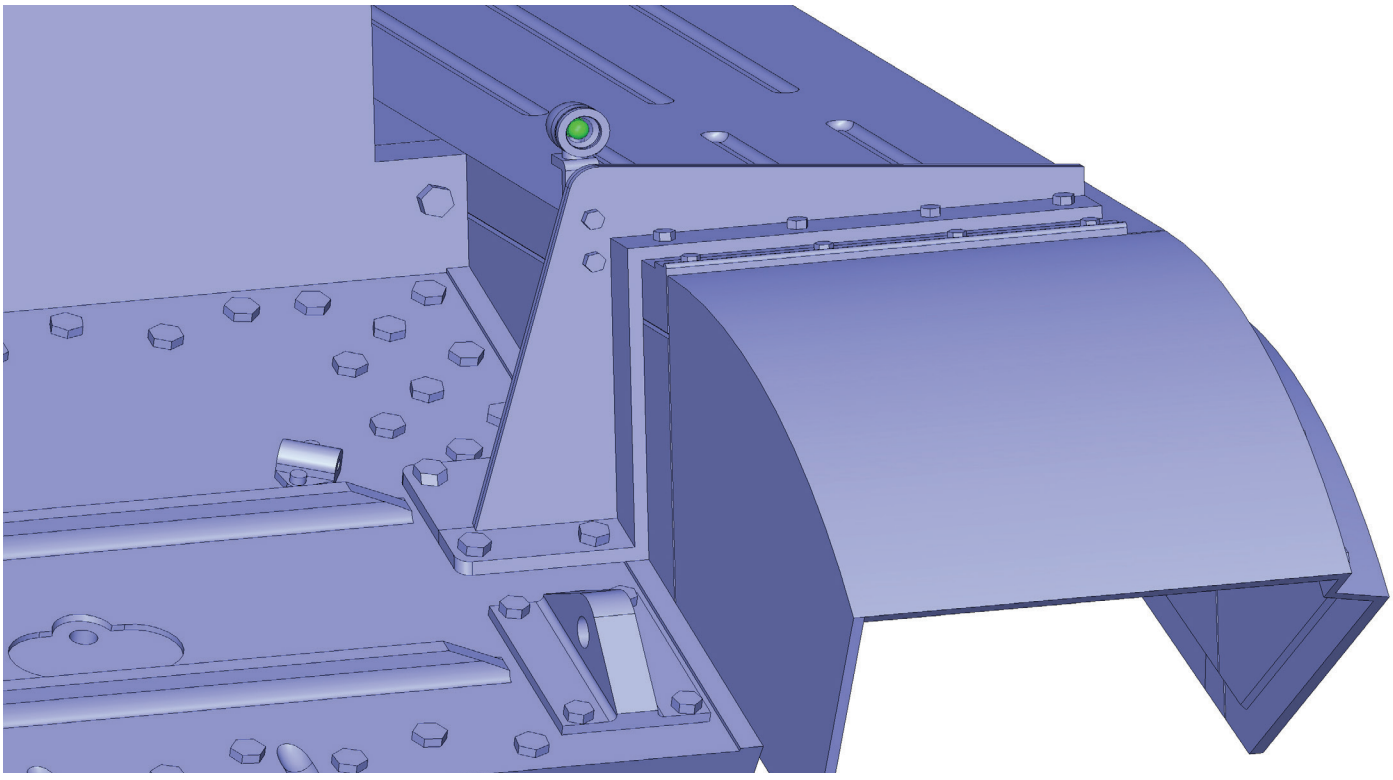

Glue the prepared assemblies of parts 02-24ABC and 02-25ABC.

Assembly 02 - Upper Hull

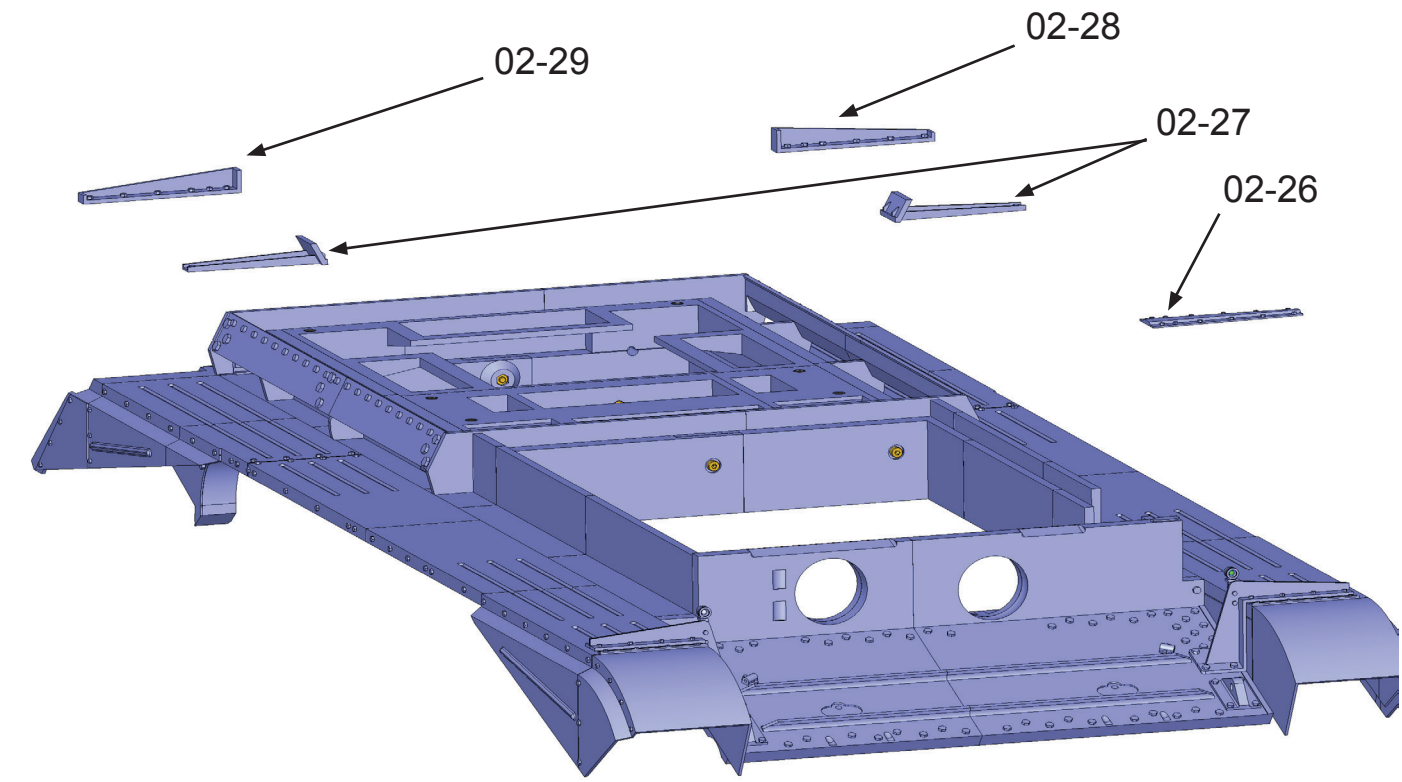

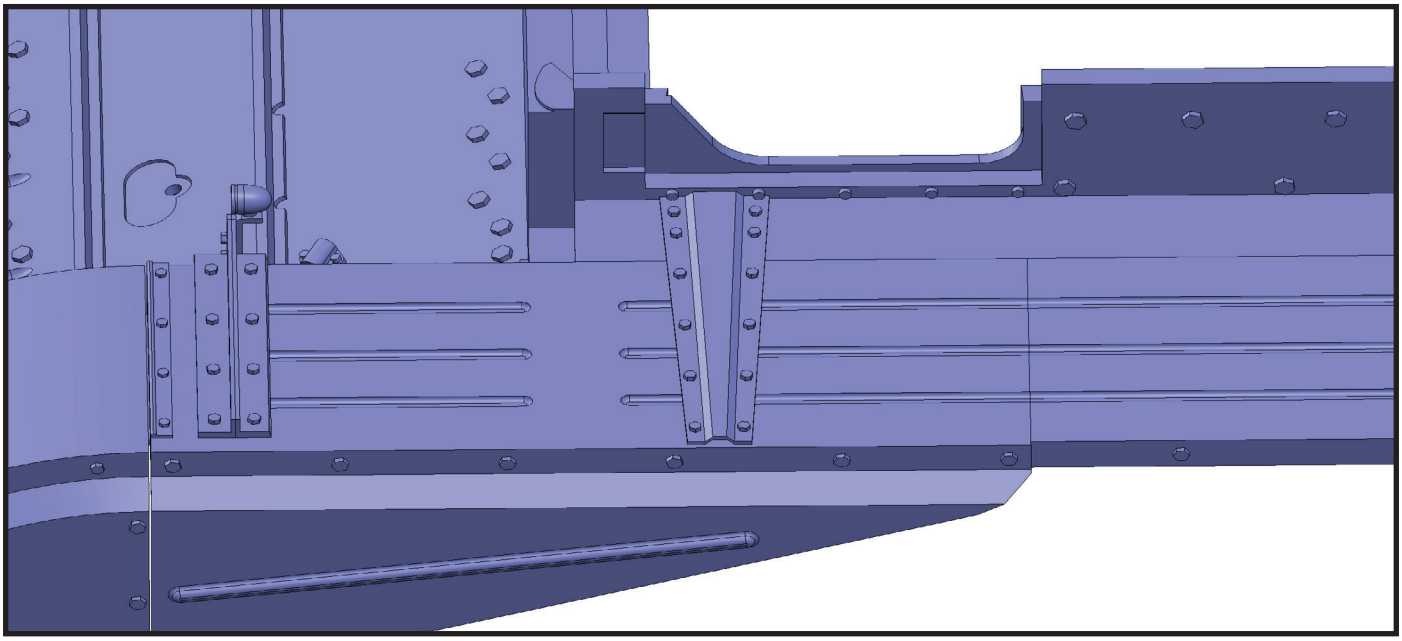

Glue parts 02-26, 02-27 (2x), 02-28 and 02-29.
The figures below show the correct position of part 02-26.

Assembly 02 - Upper Hull

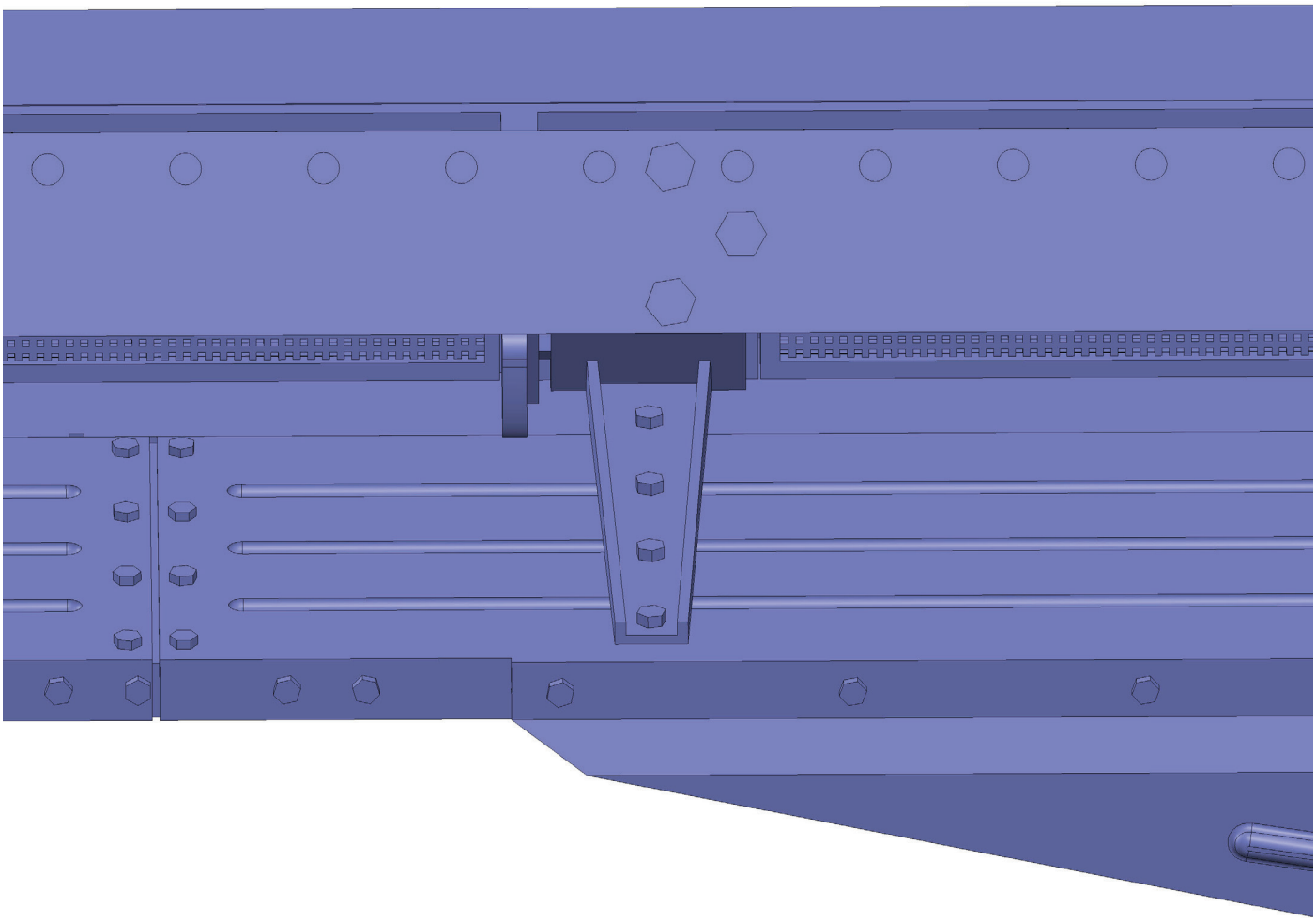

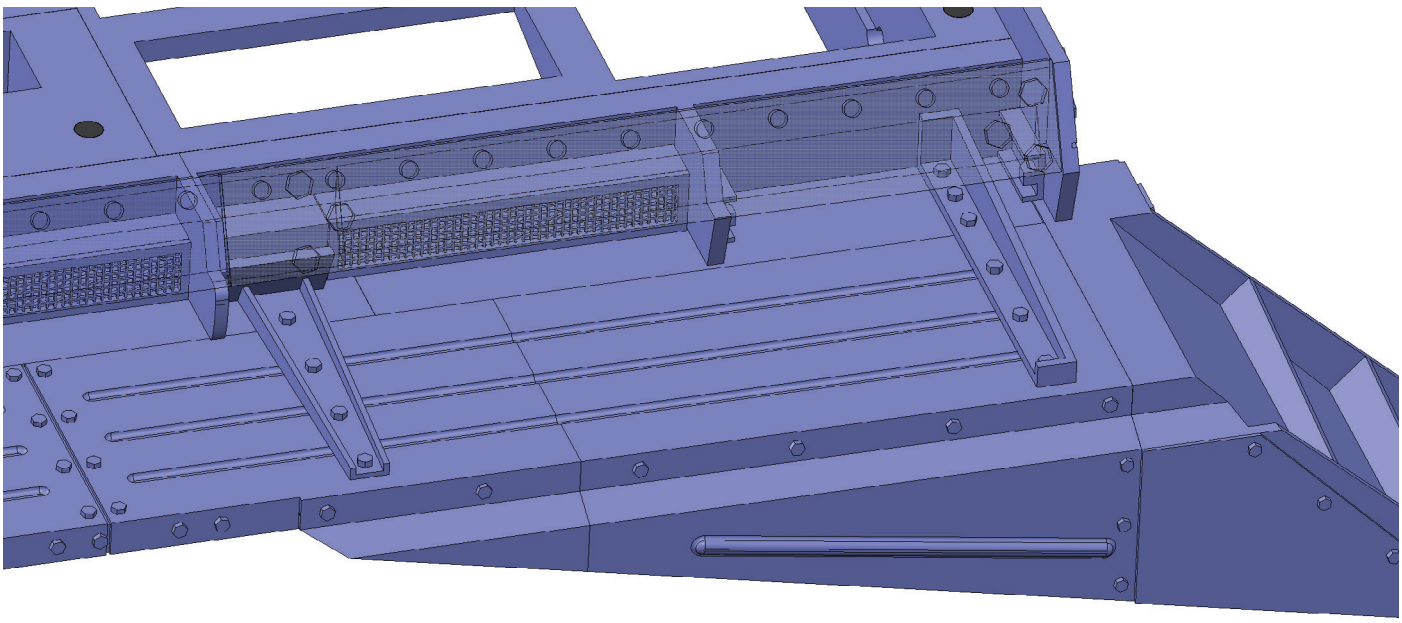

Correct position of parts 02-27. Both sides are symmetrical.

Assembly 02 - Upper Hull

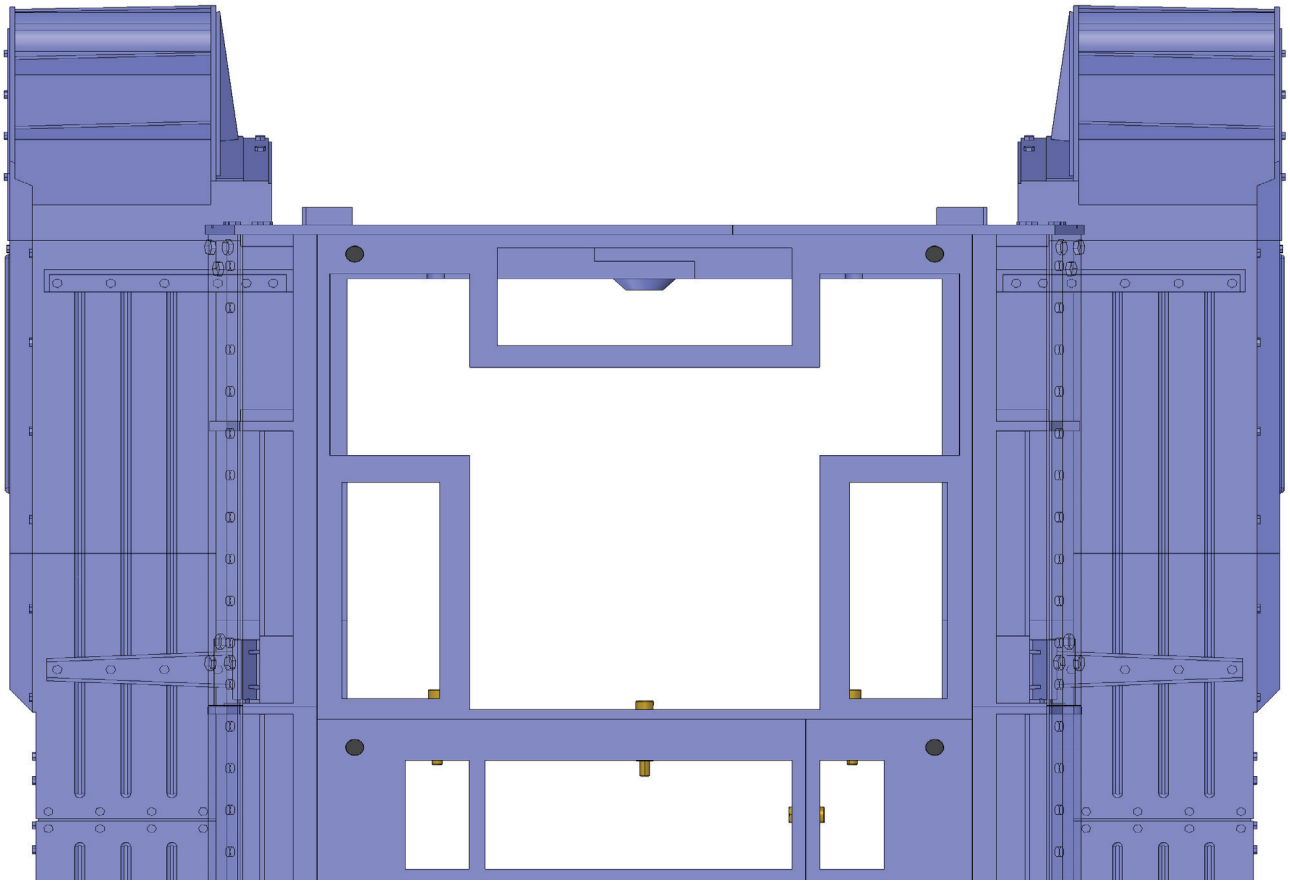

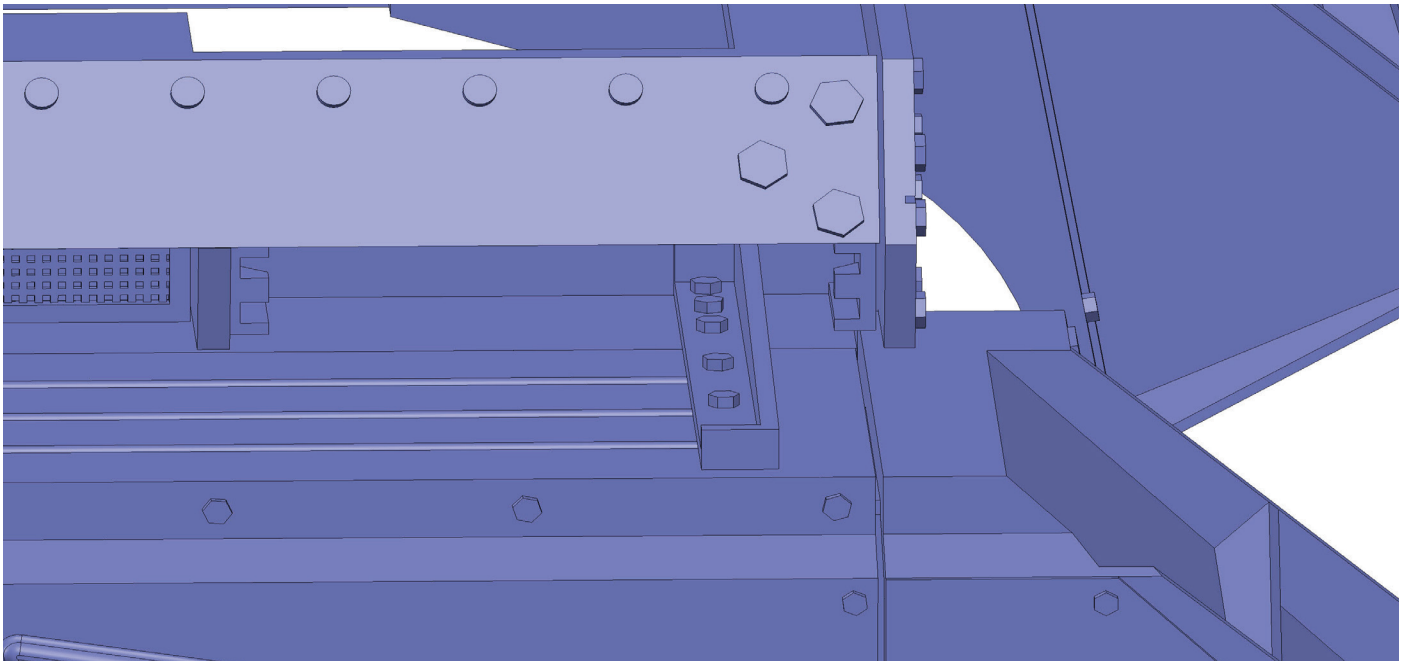

Correct position of parts 02-28 and 02-29.

Assembly 02 - Upper Hull

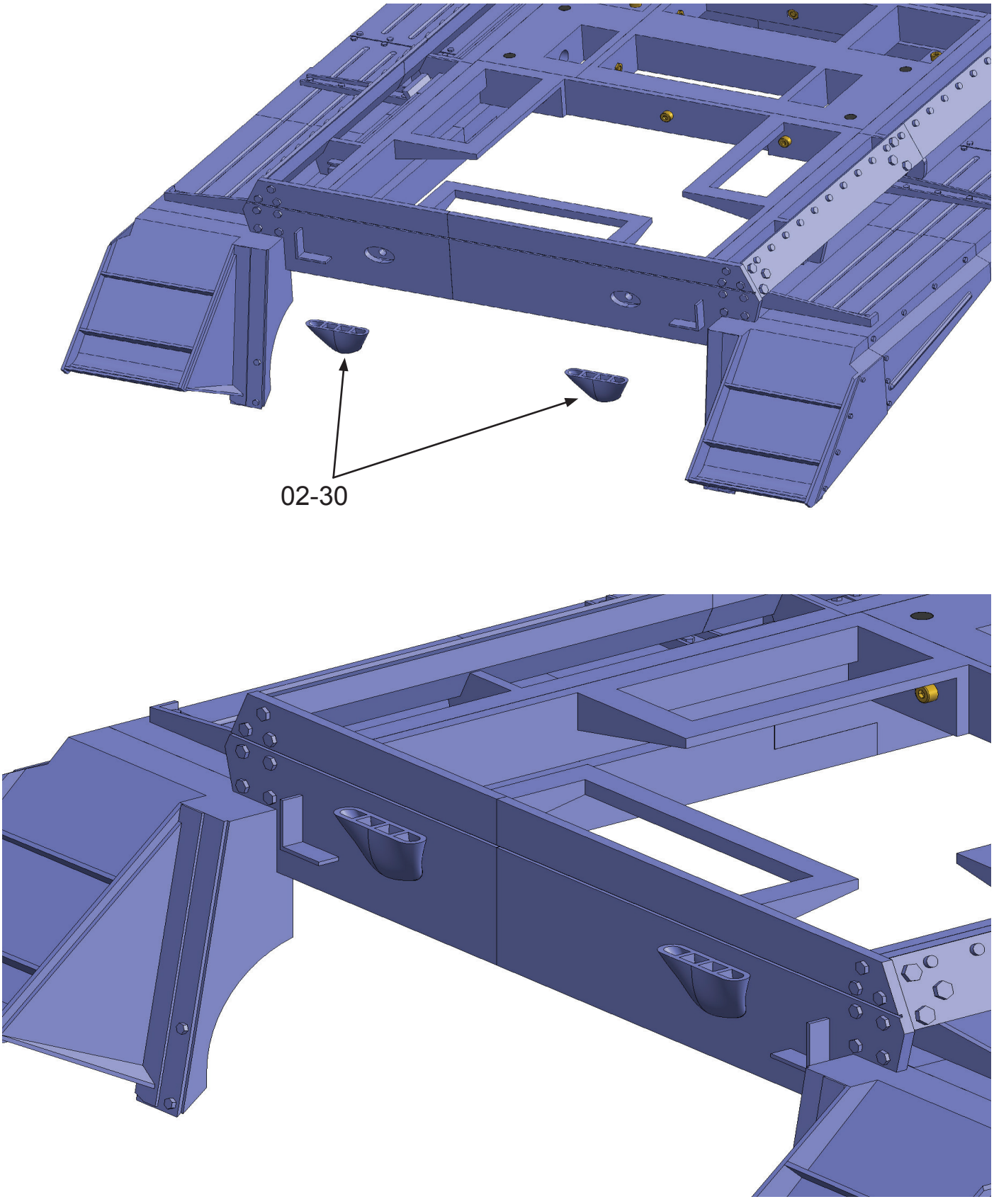

Glue the two parts 02-30.

Assembly 02 - Upper Hull

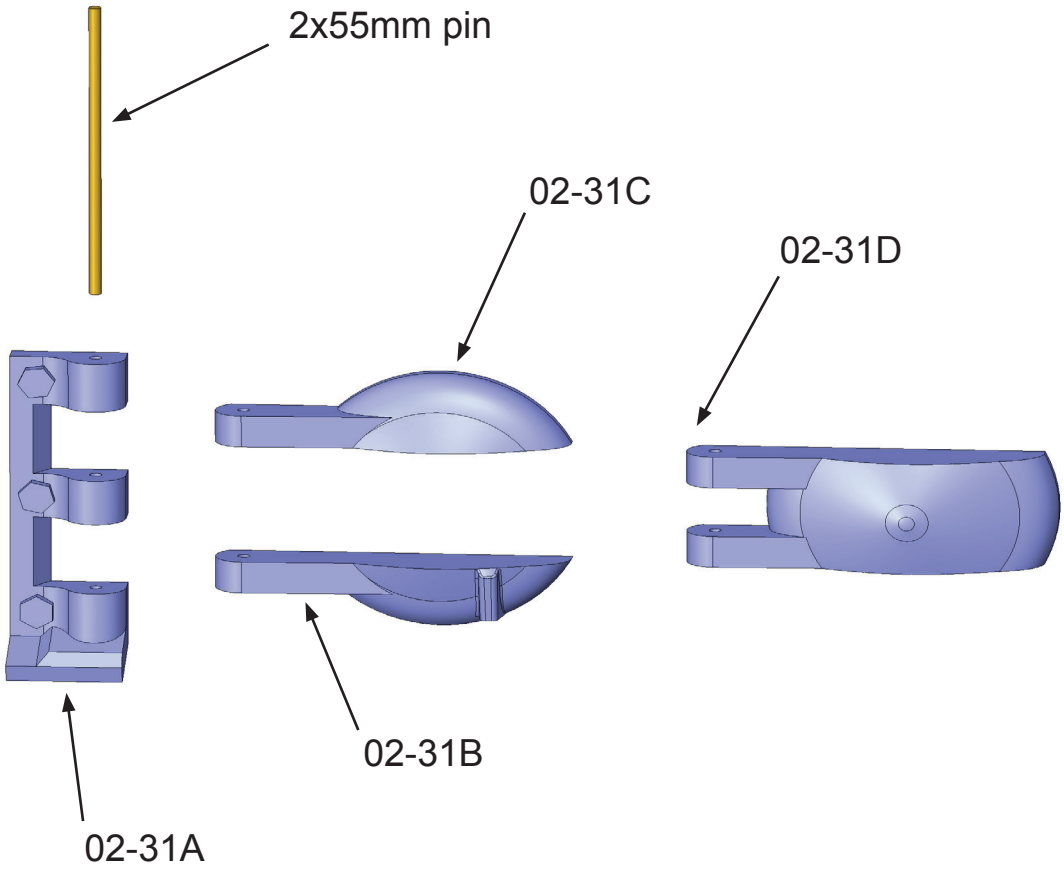

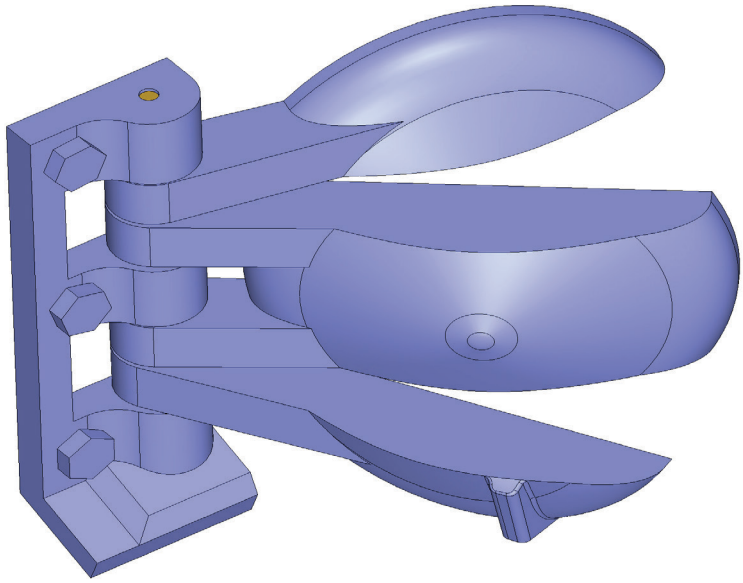

Connect parts 02-31A to 02-31D with a wire or pin 2 mm in diameter and 55 mm long.
Fix the ends of the wire with glue. Make sure that all parts rotate independently.

Assembly 02 - Upper Hull

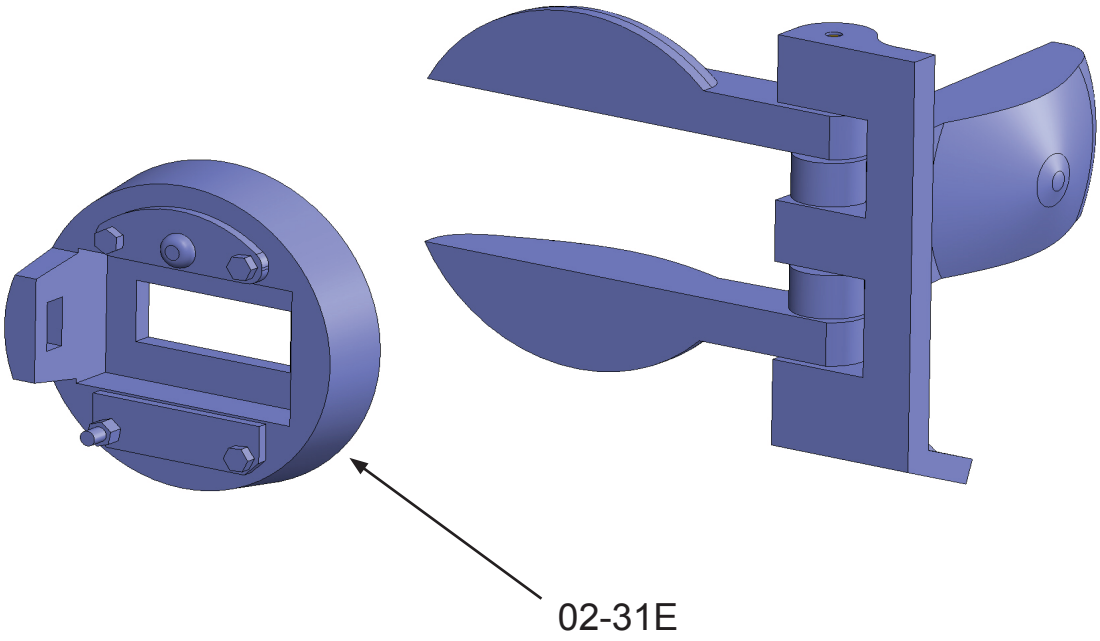

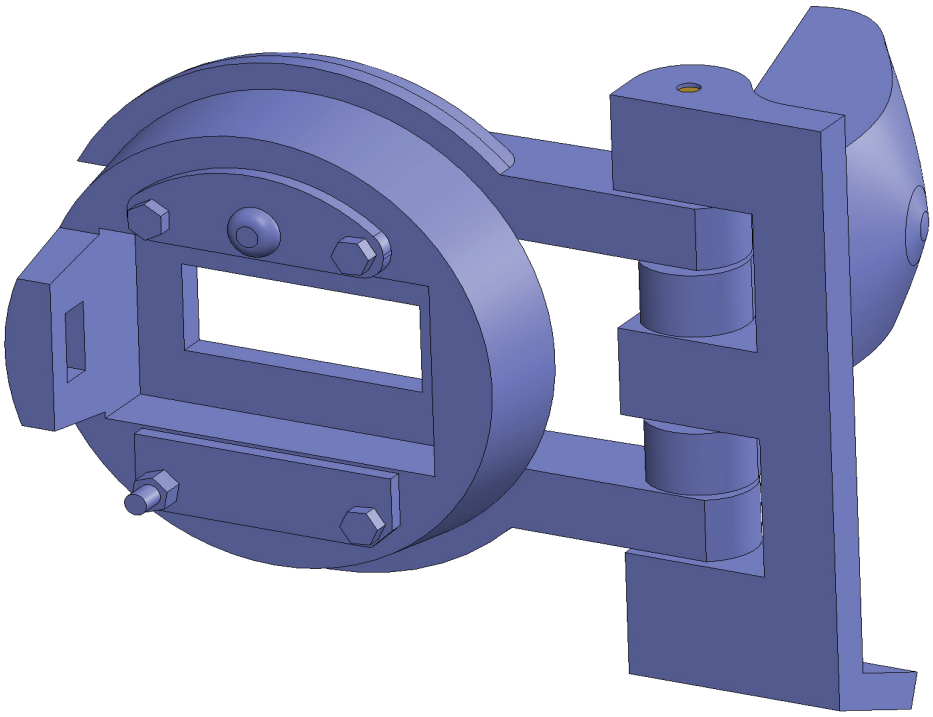

Glue part 02-31E. Glue the part only to parts 02-31B and 02-31C.
Part 02-31D must rotate independently.

Assembly 02 - Upper Hull

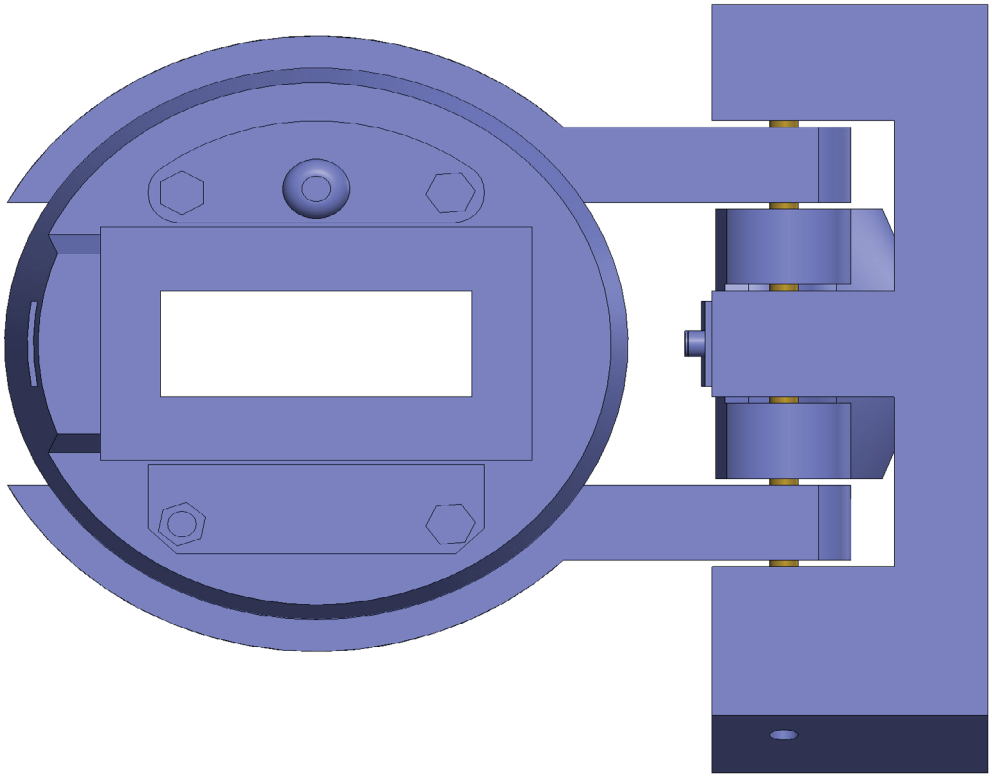

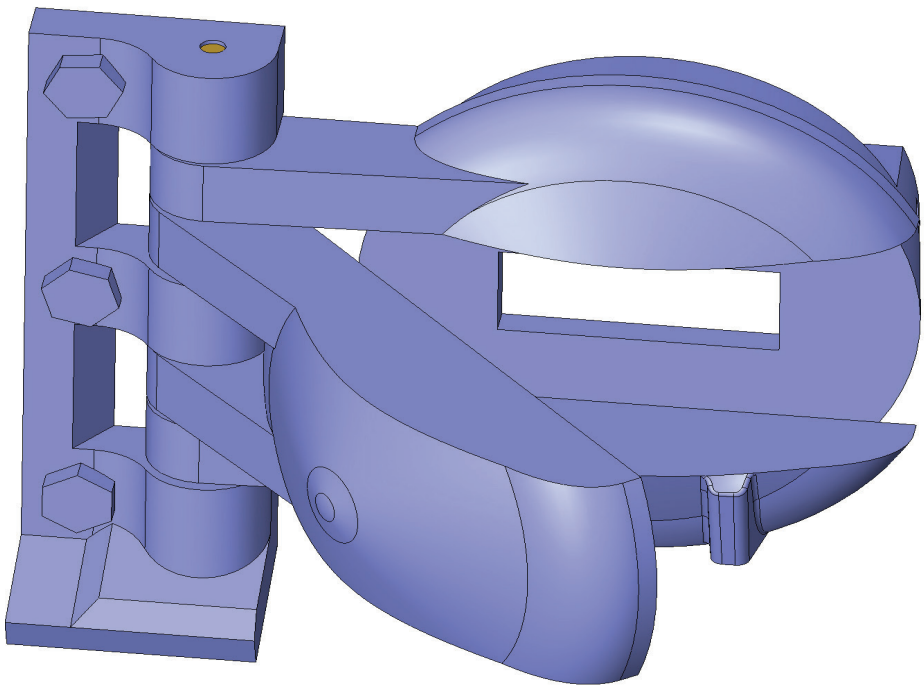

Parts assembly details 02-31A to 02-31E.
Make sure that part 02-31E is correctly centered against parts 02-31B and 02-31C.

Assembly 02 - Upper Hull

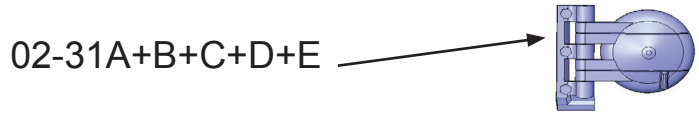

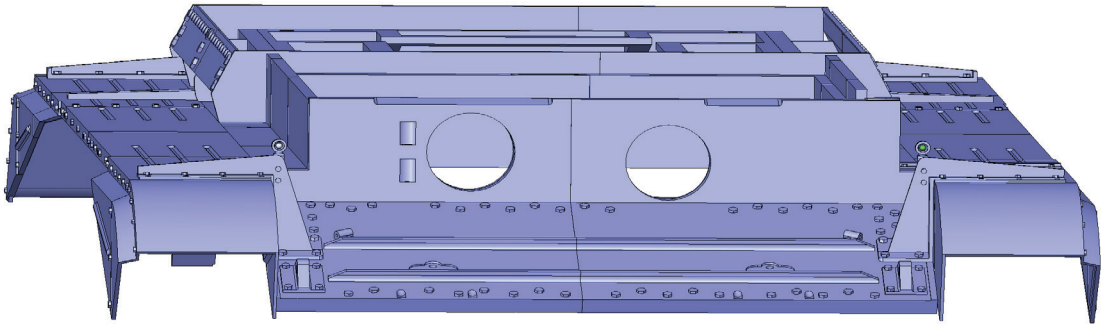

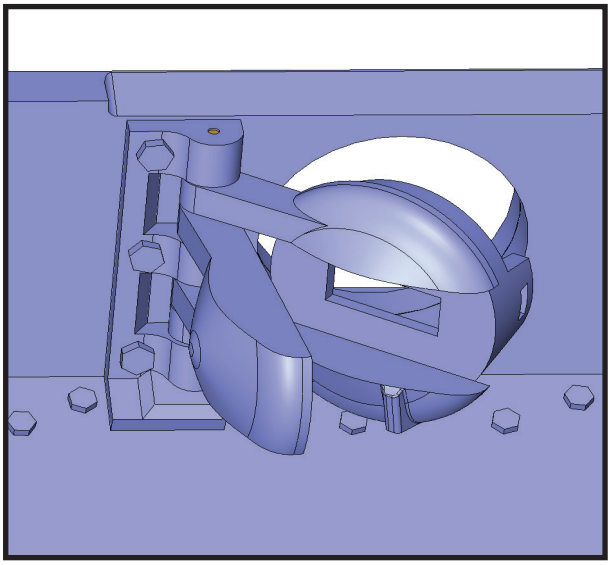

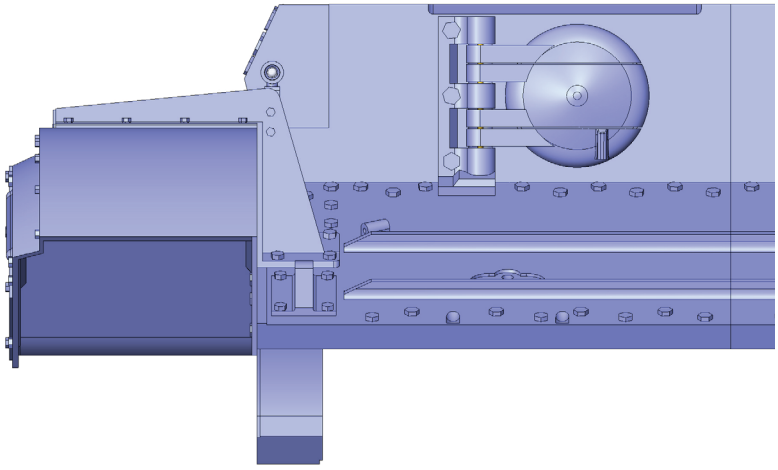

Glue the parts assemblies 02-31A to 02-31E.

Assembly 02 - Upper Hull

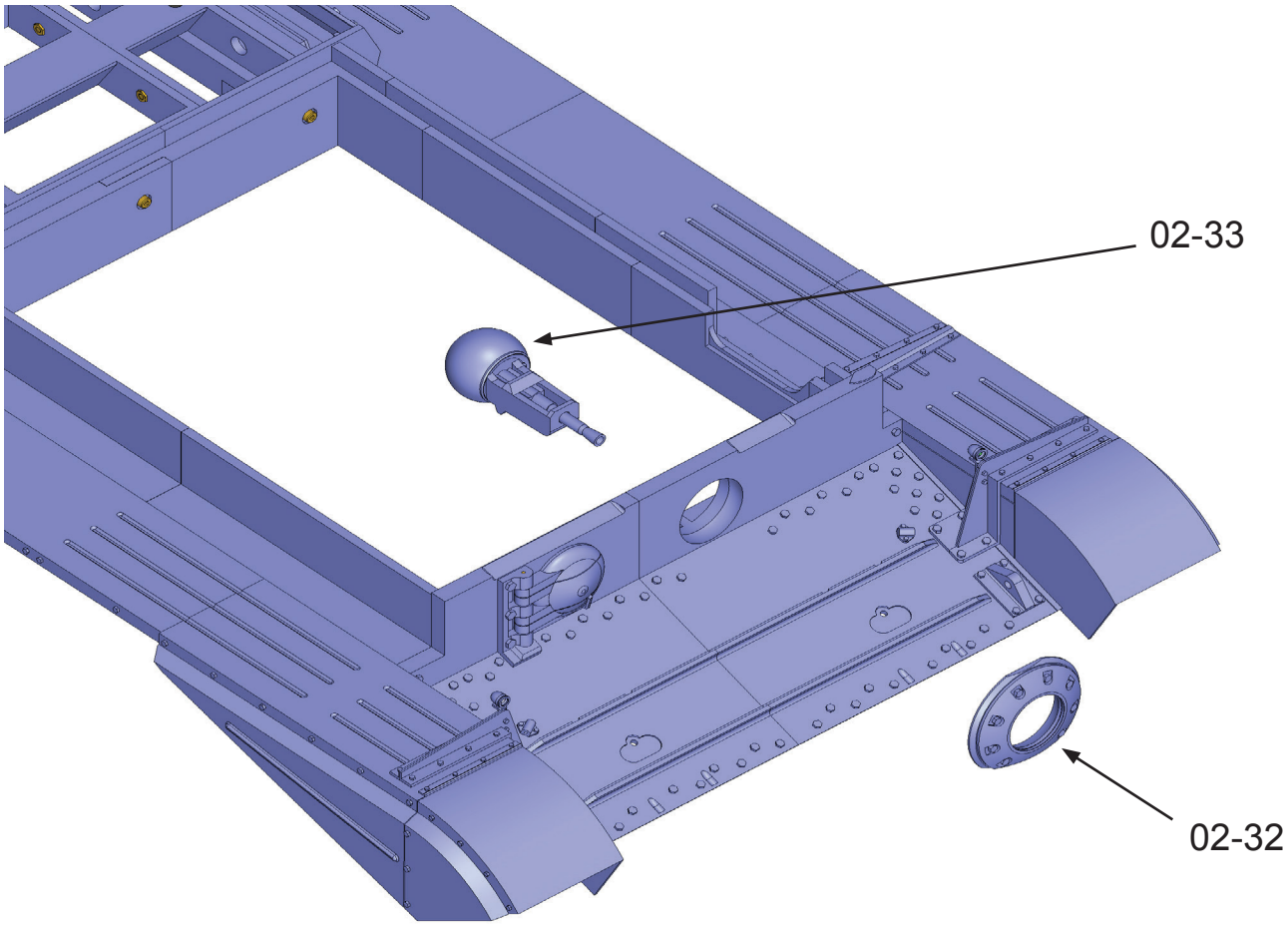

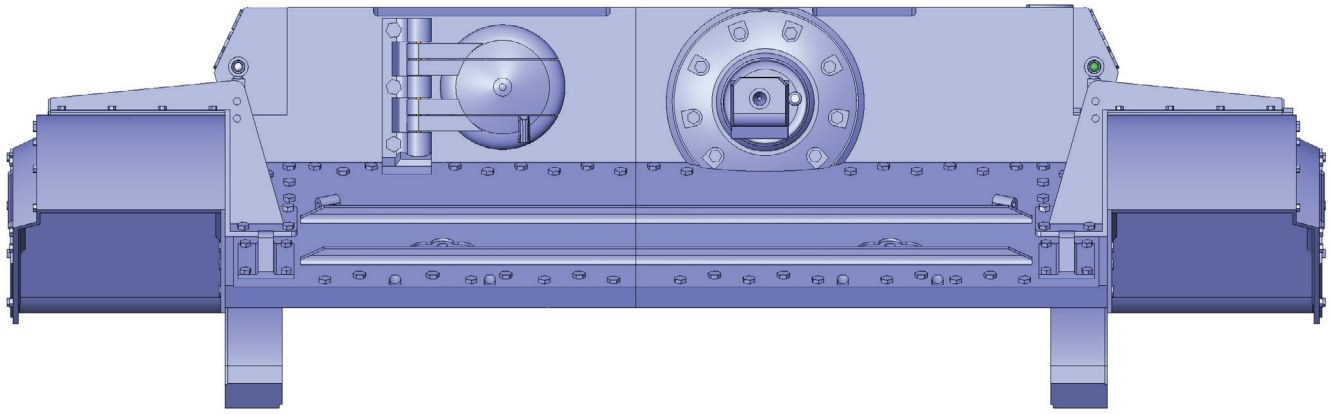

Glue part 02-32.Insert part 02-33.Do not glue part 02-33.

Assembly 02 - Upper Hull

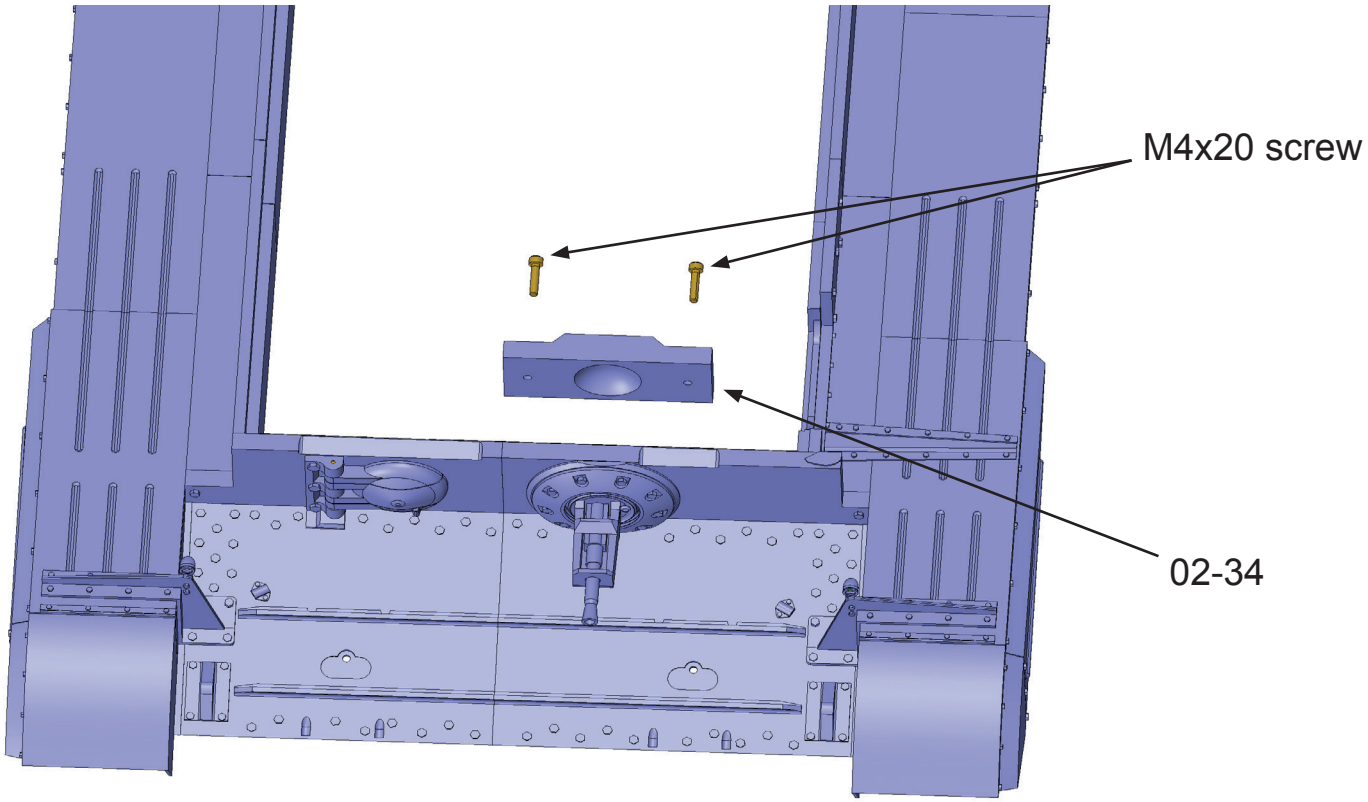

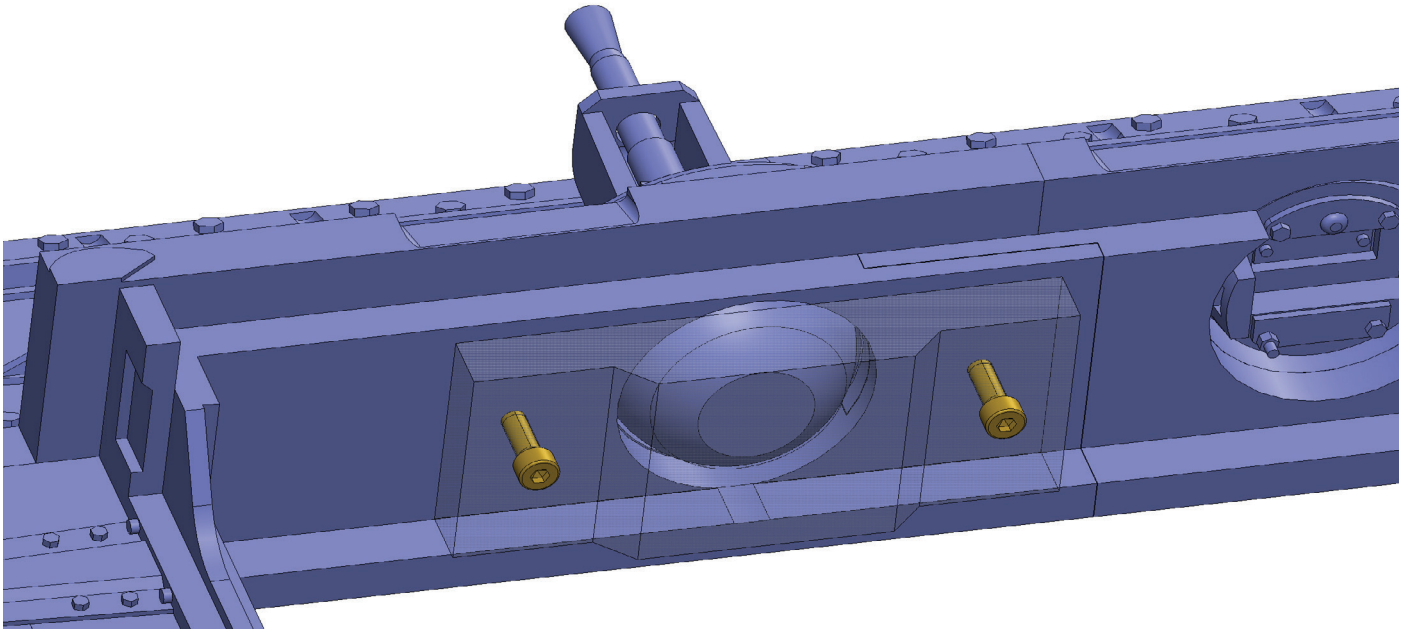

Secure part 02-33 with part 02-34.
Tighten gently so that the machine gun can move freely.
Use two M4x20 screws.

Assembly 02 - Upper Hull

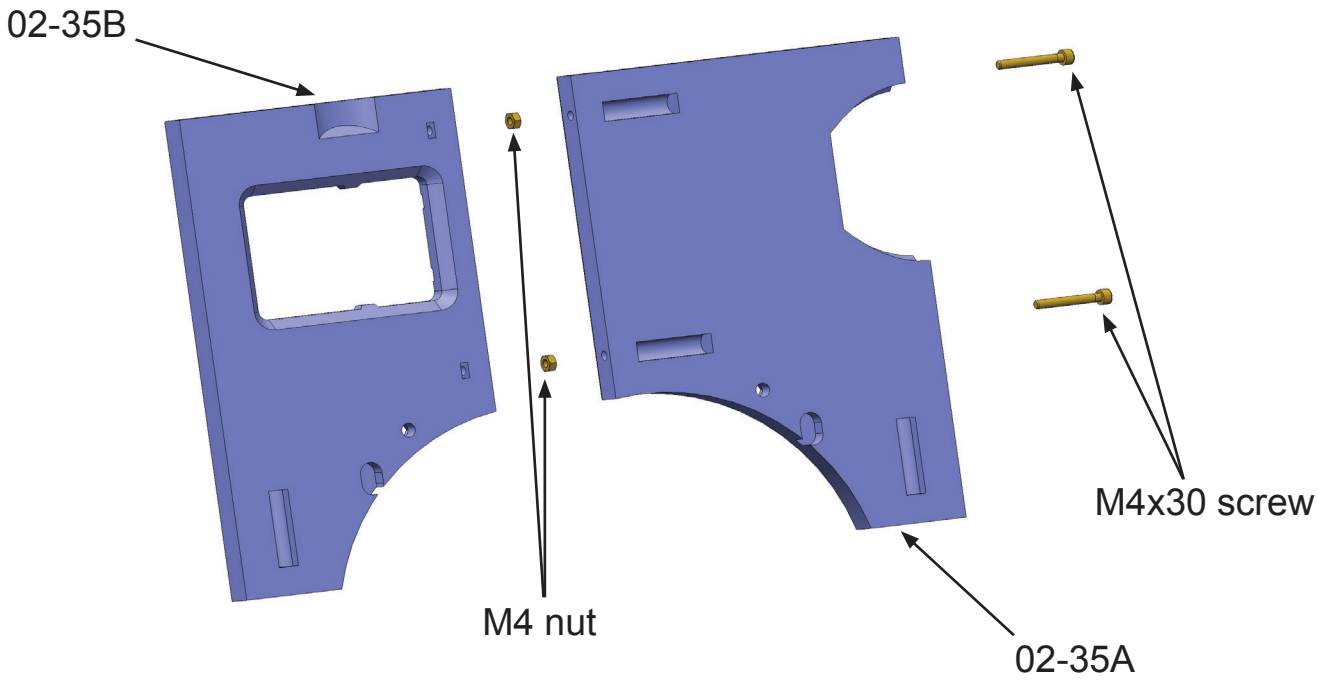

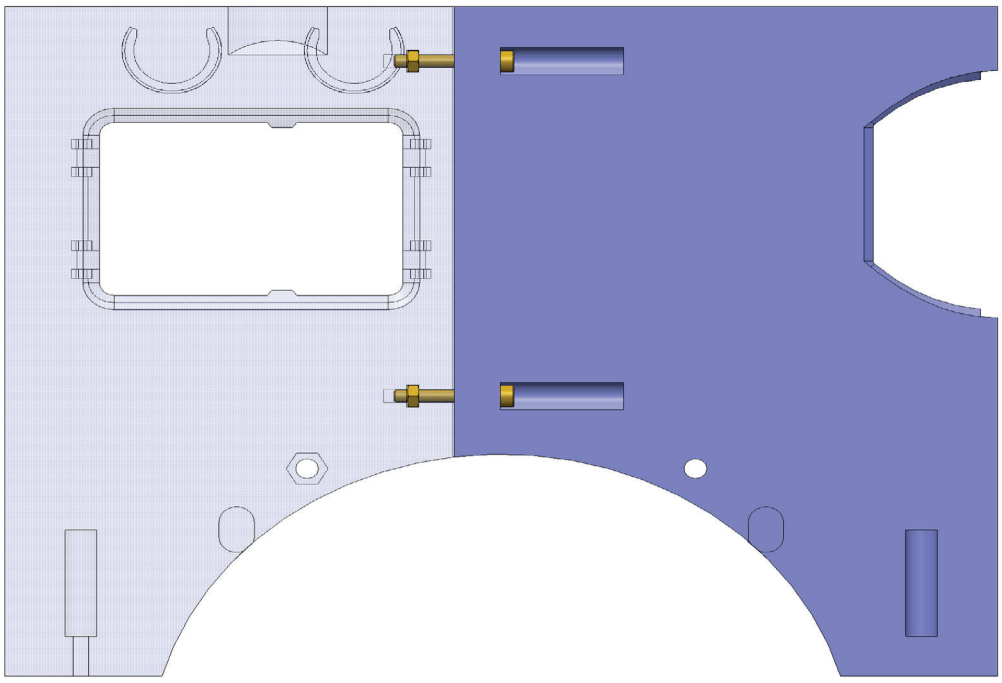

Glue parts 02-35A and 02-35B.Insert 2 M4 nuts, use 2 M4x30 screws.
These help with precise gluing and strengthen the structure.
SKIP THIS STEP, IF YOU HAVE BIG PRINTER (USE PART 02-35AB).

Assembly 02 - Upper Hull

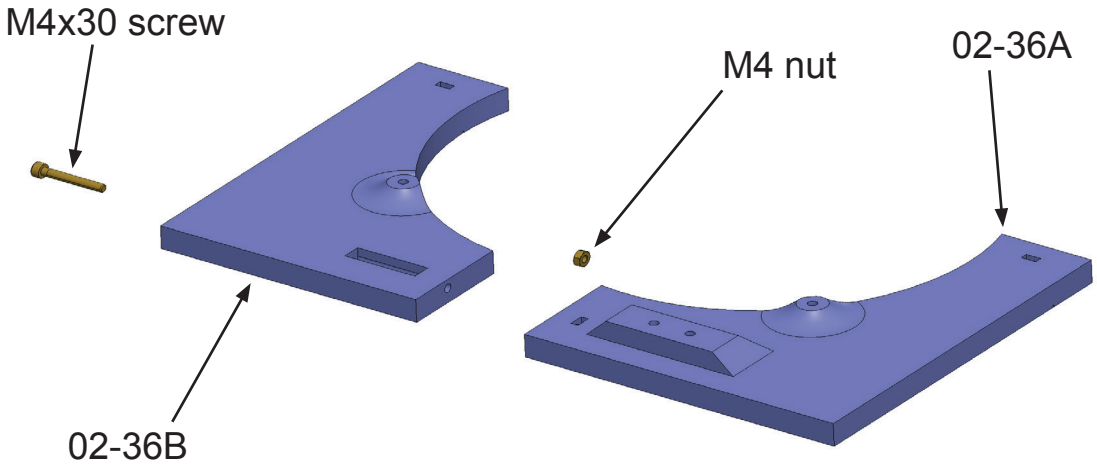

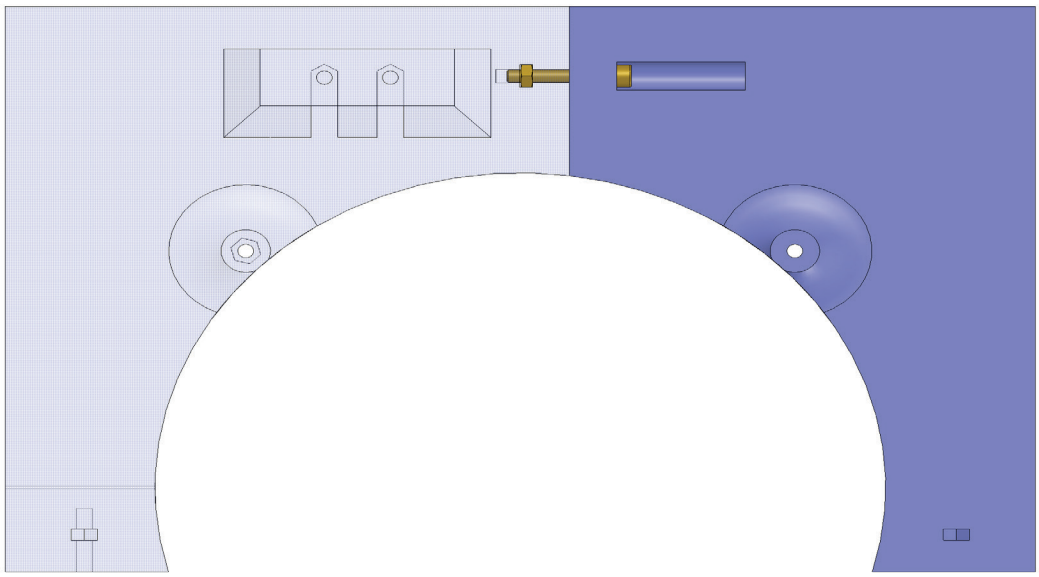

Glue parts 02-36A and 02-36B.Insert M4 nut, use M4x30 screw.
These help with precise gluing and strengthen the structure.
SKIP THIS STEP, IF YOU HAVE BIG PRINTER (USE PART 02-36AB).

Assembly 02 - Upper Hull

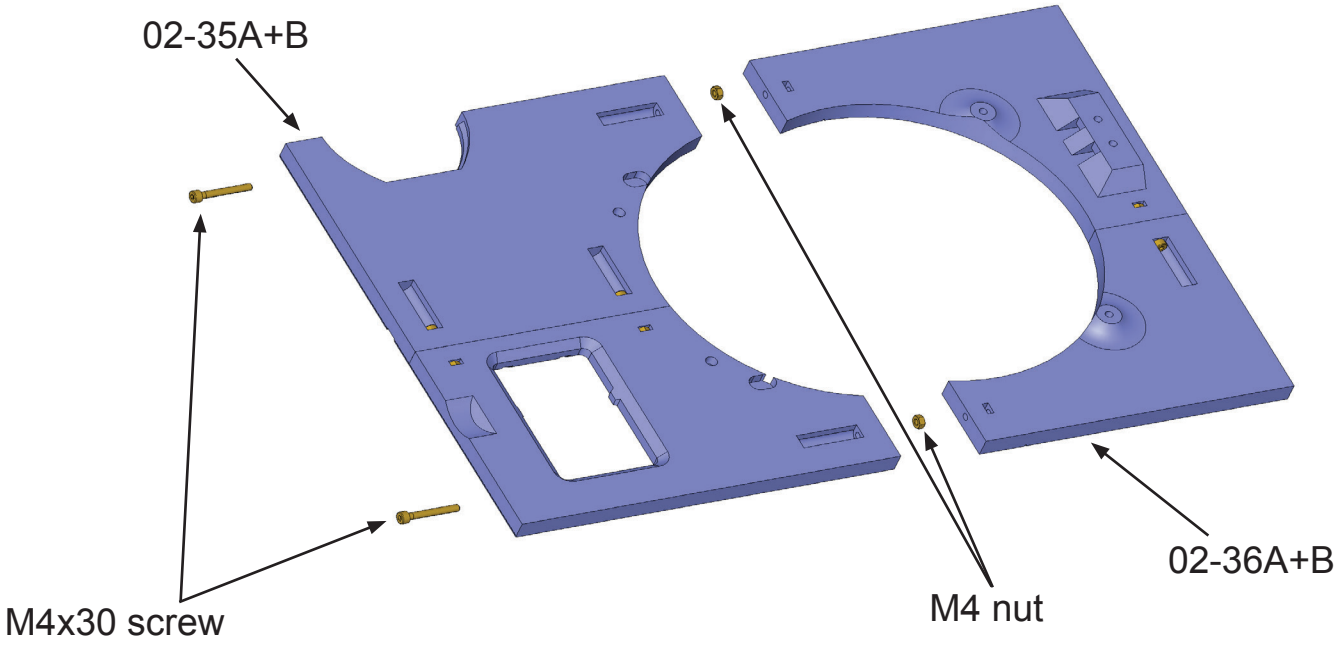

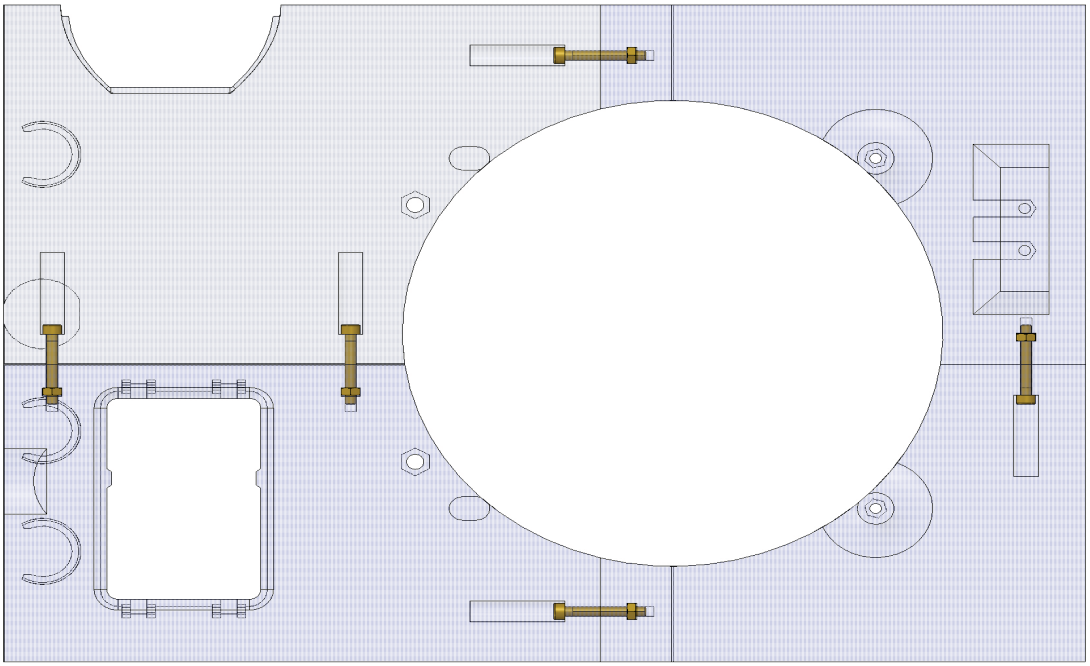

Glue parts 02-35AB and 02-36AB.Insert M4 nuts, use M4x30 screws.

Assembly 02 - Upper Hull

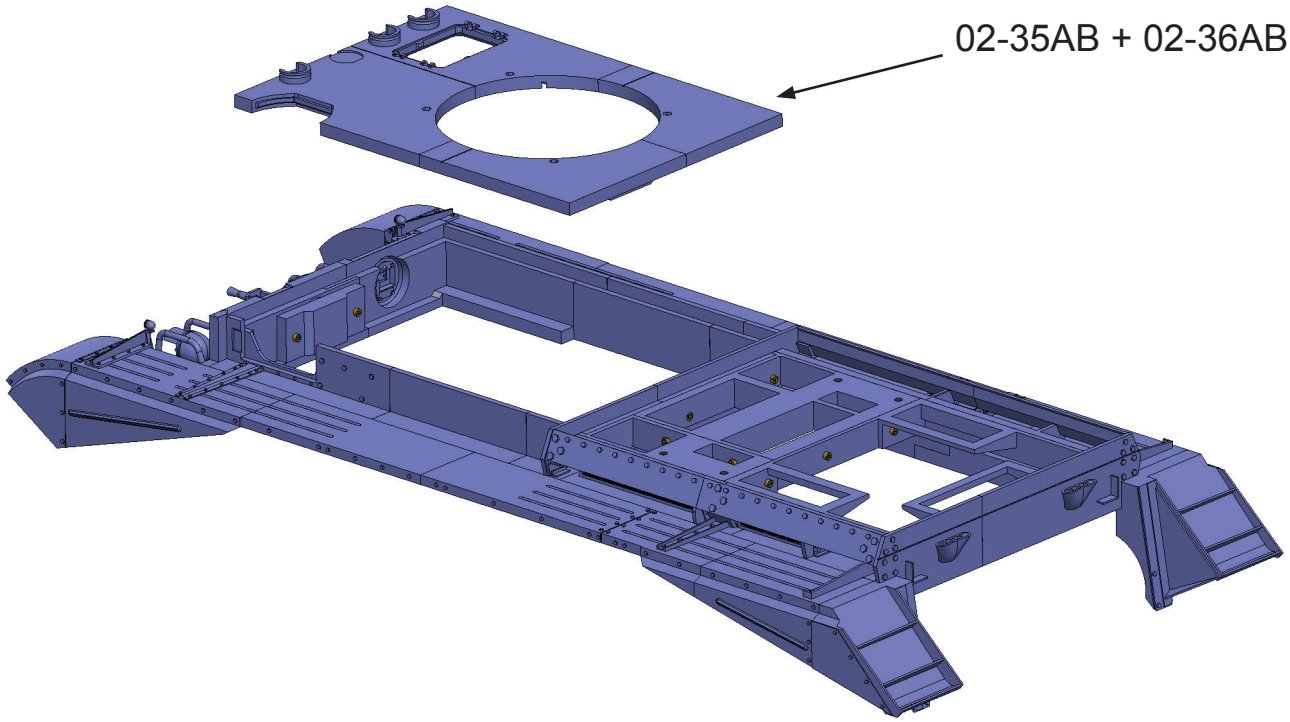

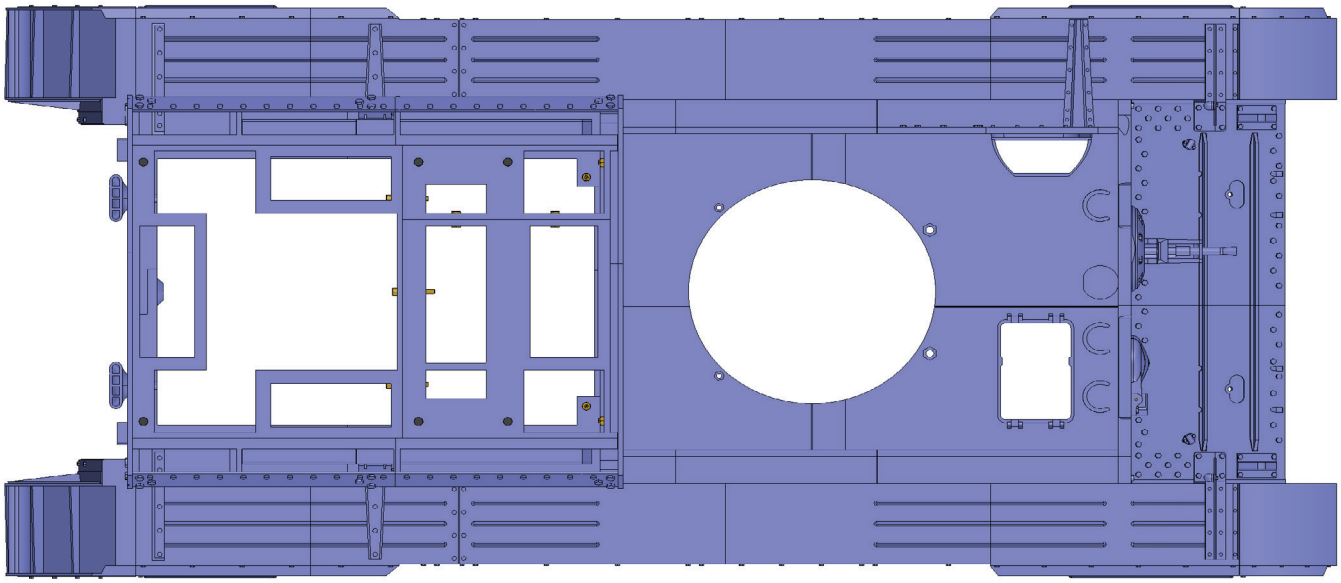

Glue parts 02-35AB to 02-36AB.

Assembly 02 - Upper Hull

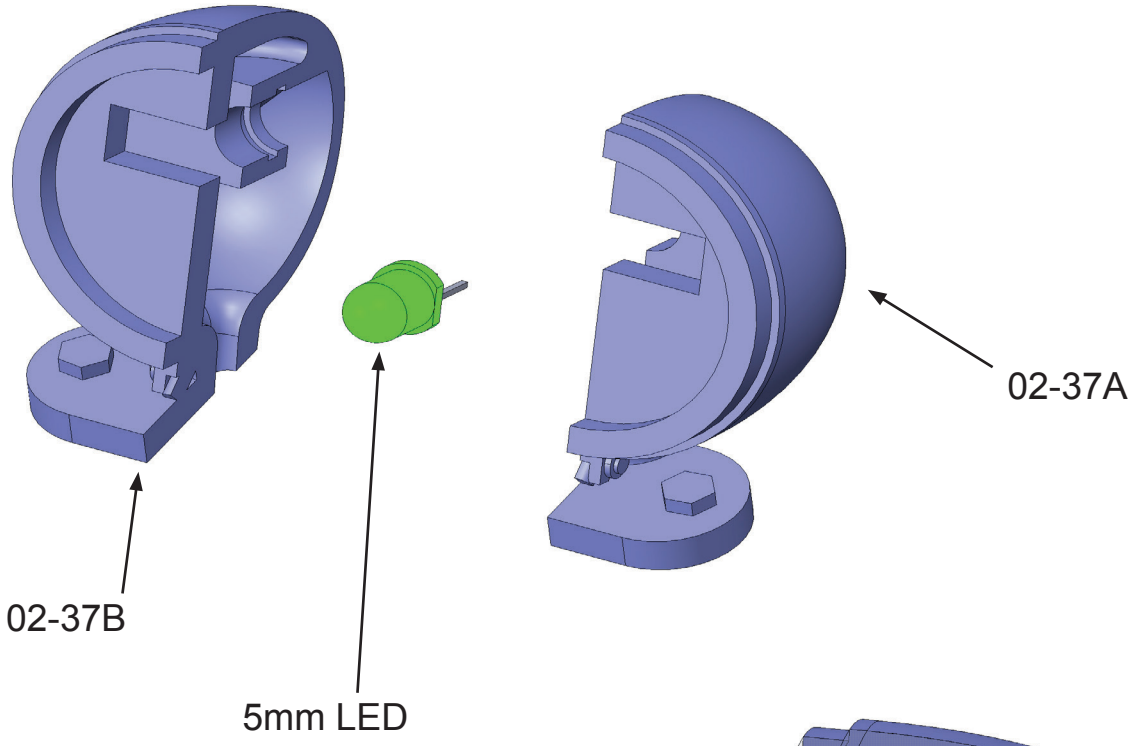

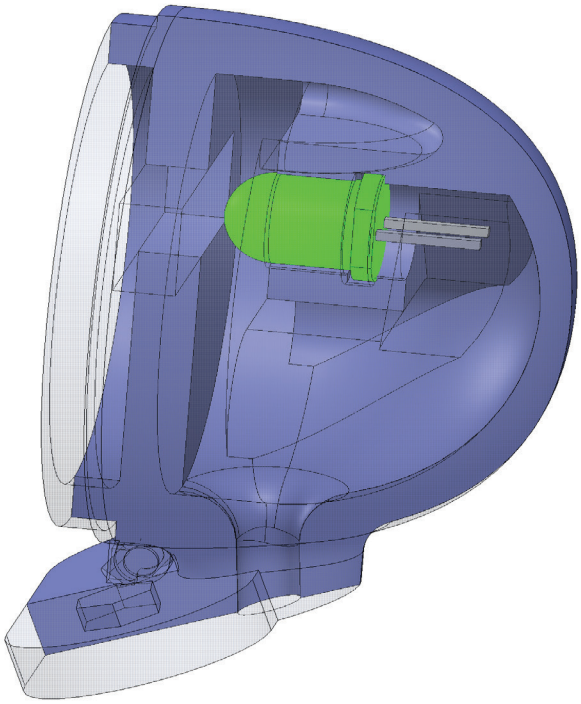

According to the documentation, solder the wires to the 5mm LED diode.
We recommend wires with a maximum diameter of 1.2 mm.
The installation hole for the cables has a diameter of 3 mm.
Insert the prepared and tested diode into one of the parts 02-37A and 02-37B.
Seal the unit with glue.

Assembly 02 - Upper Hull

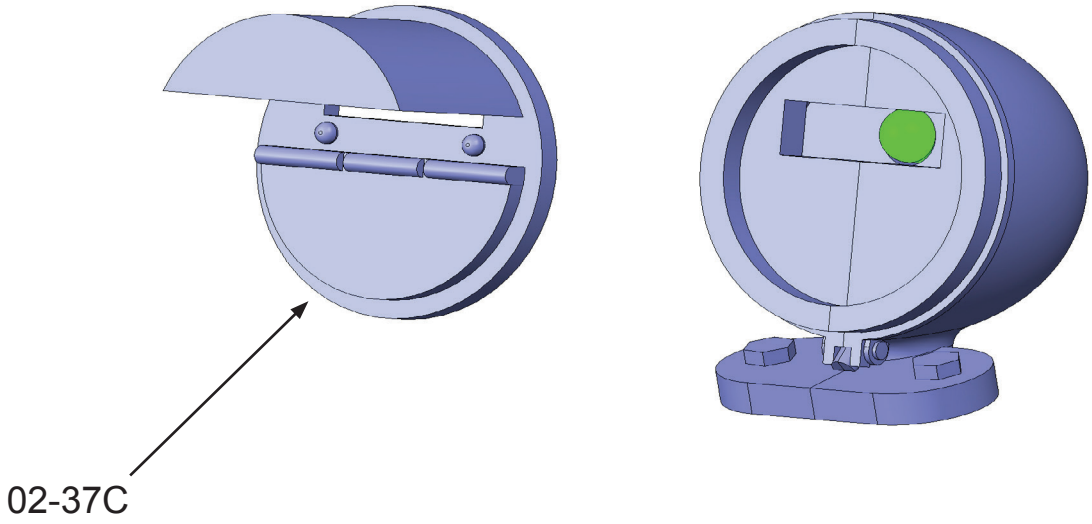

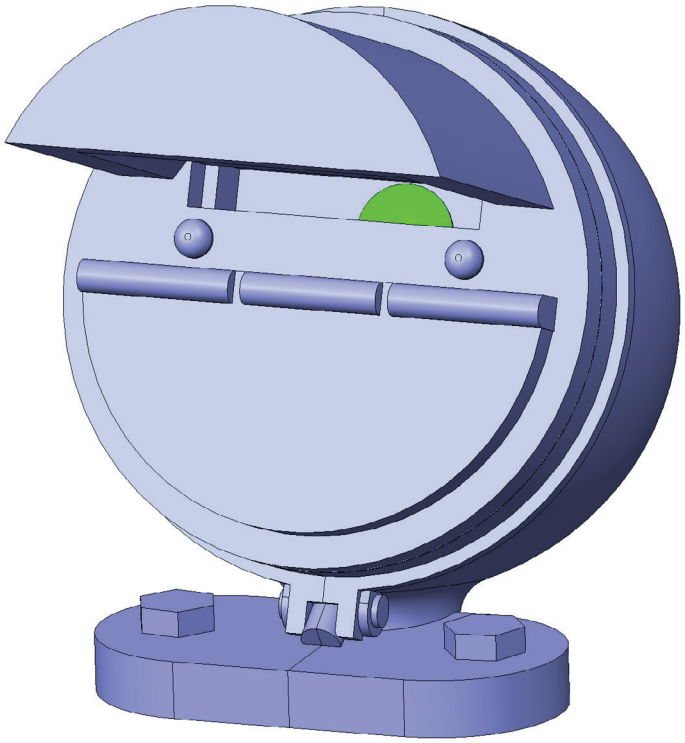

Glue part 02-37C.

Assembly 02 - Upper Hull

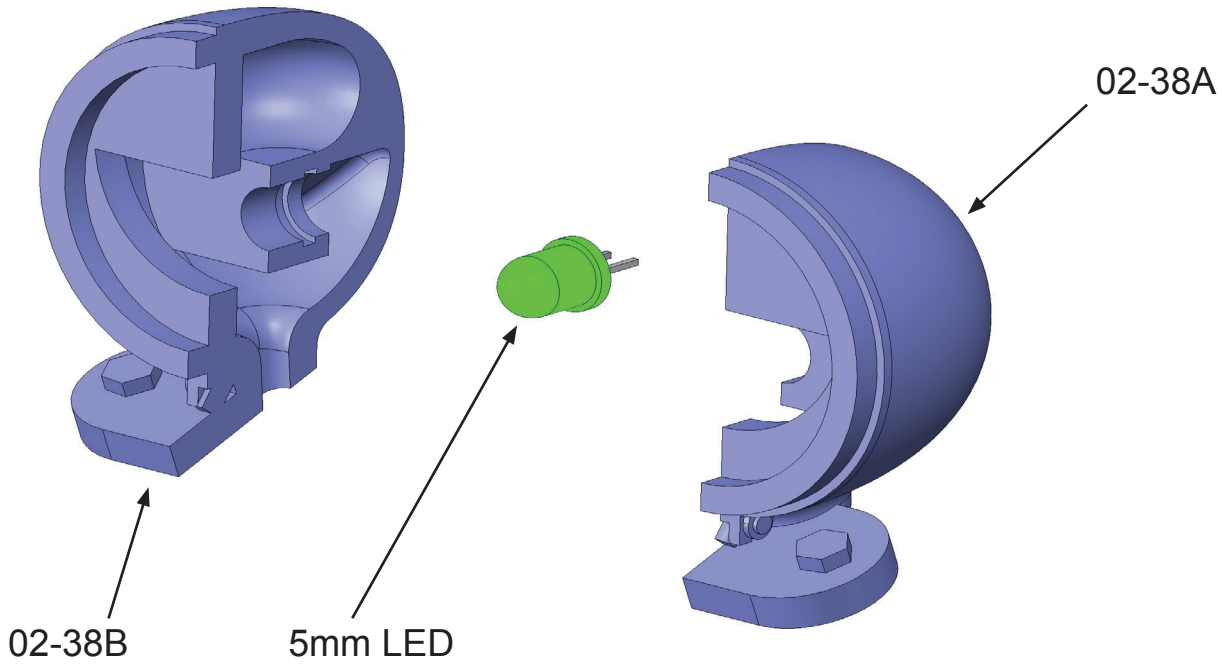

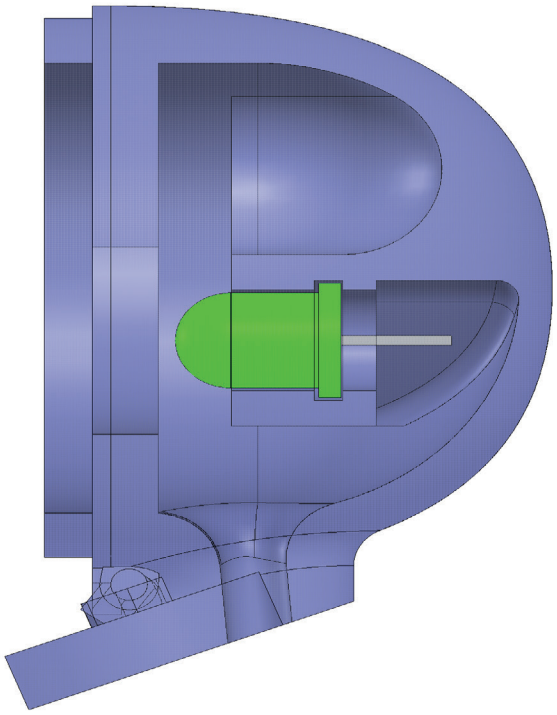

The procedure is similar for the second headlight.
Solder the wires to the 5mm LED diode.
We recommend wires with a maximum diameter of 1.2 mm.
The installation hole for the cables has a diameter of 3 mm.
Insert the prepared and tested diode into one of the parts 02-38A and 02-38B.
Seal the unit with glue.

Assembly 02 - Upper Hull

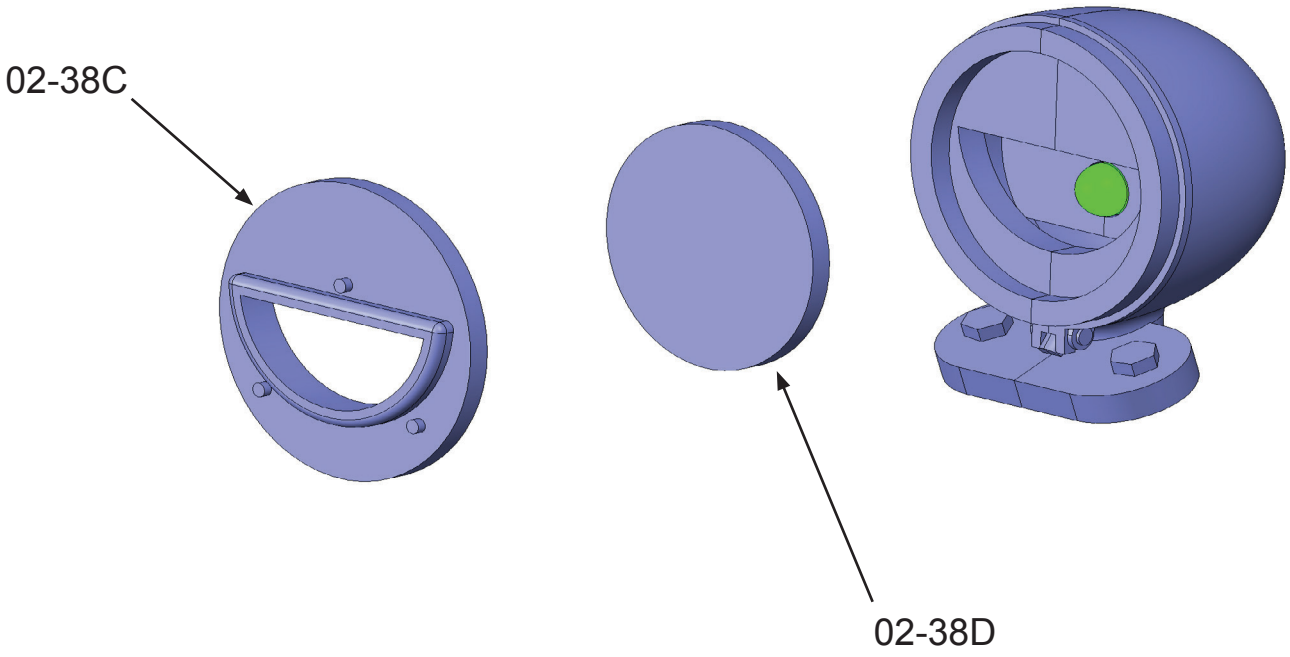

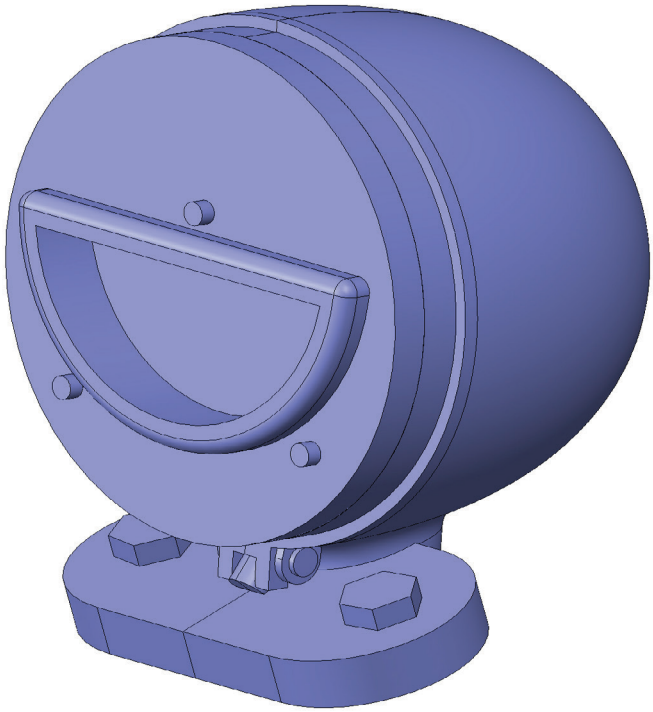

Glue parts 02-38C and 02-38D. Part 02-38D must be translucent.
You can use any thick translucent foil instead.
Cut a circle with a diameter of 23 mm.

Assembly 02 - Upper Hull

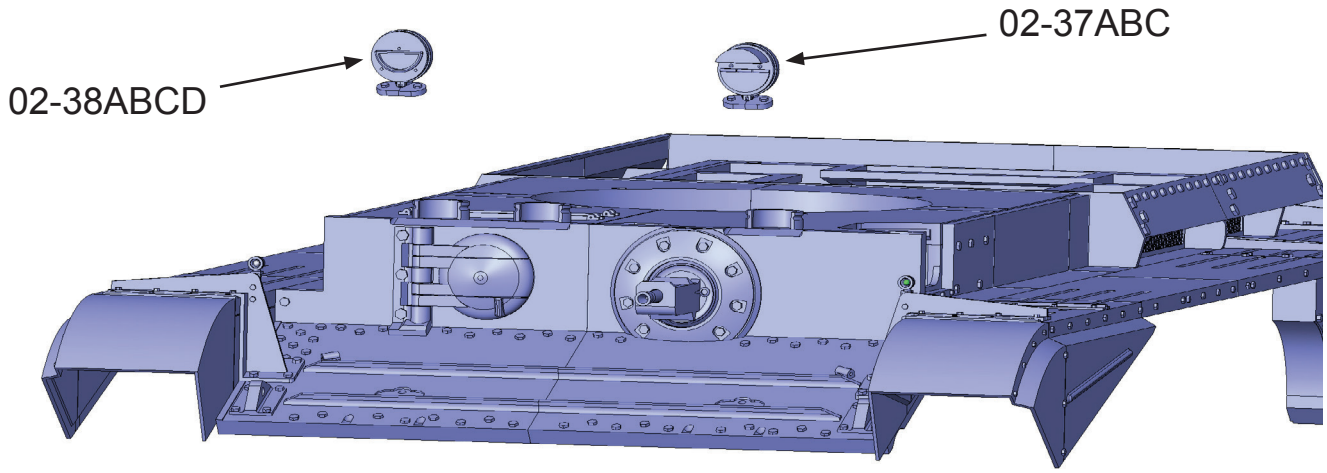

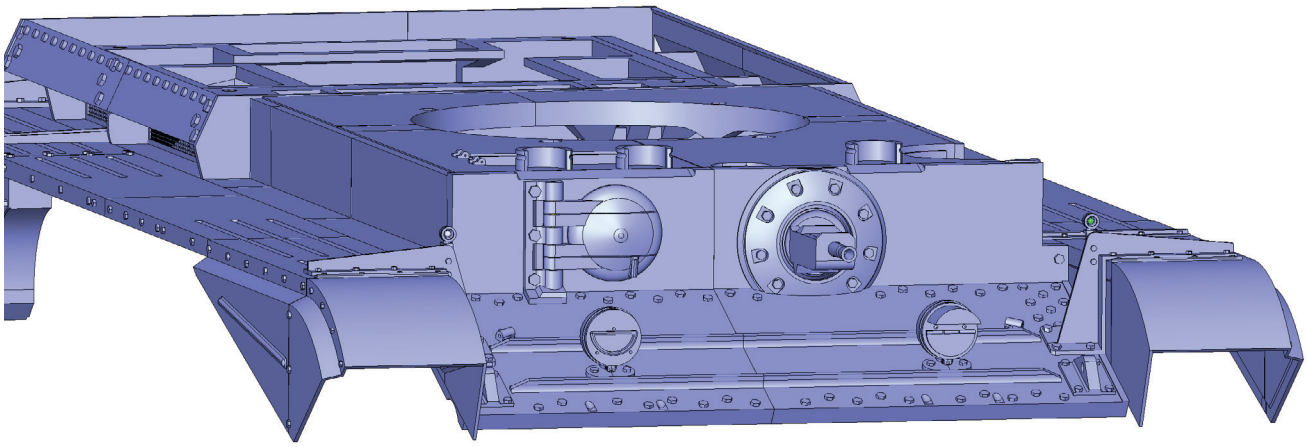

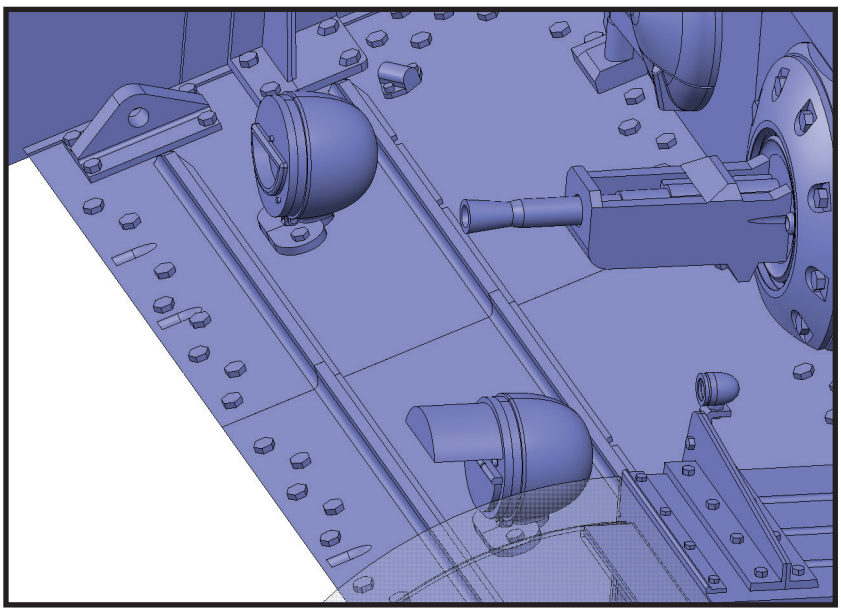

Glue the parts assemblies 02-37ABC and 02-38ABCD.
Before doing so, of course, run the wires through the appropriate holes.

Assembly 02 - Upper Hull

4x

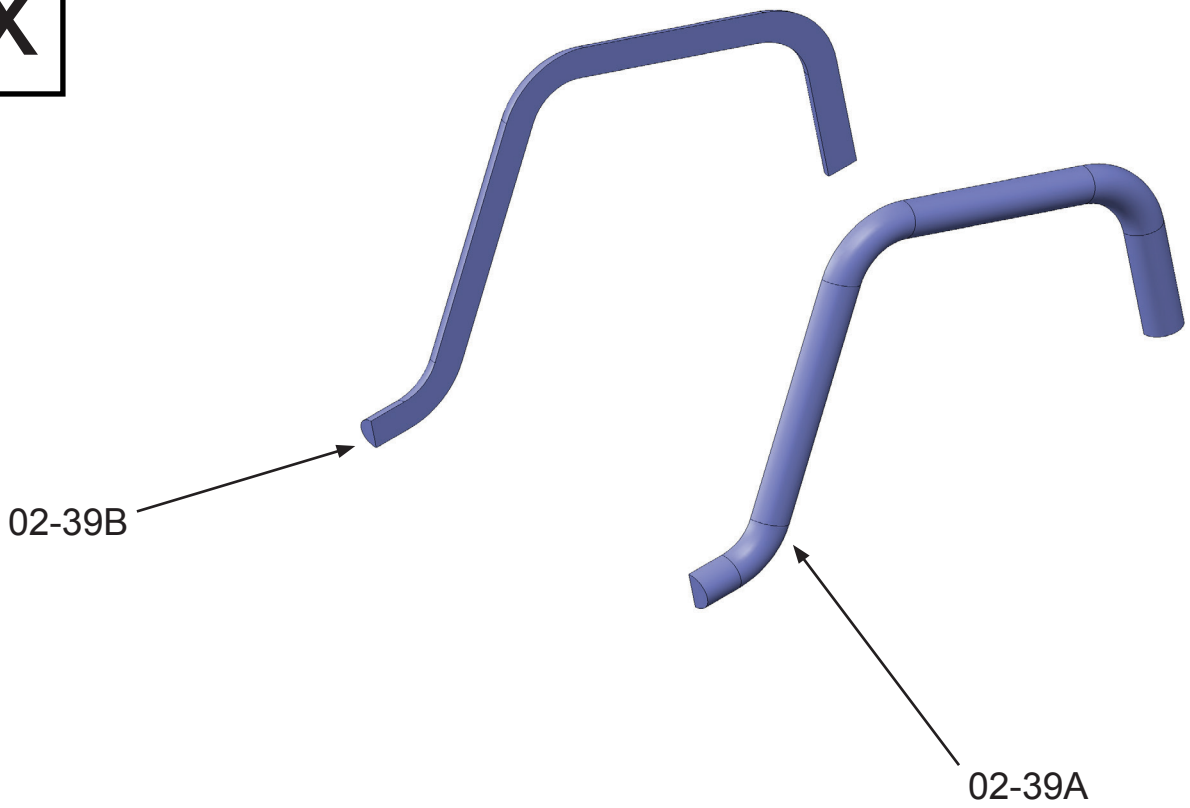

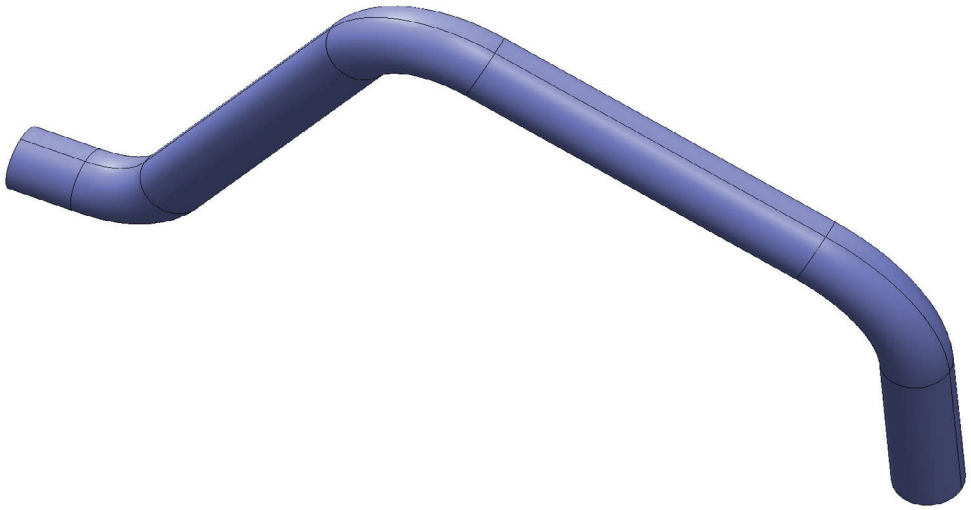

Glue parts 02-39A and 02-39B. You will need 4 such assemblies.

Assembly 02 - Upper Hull

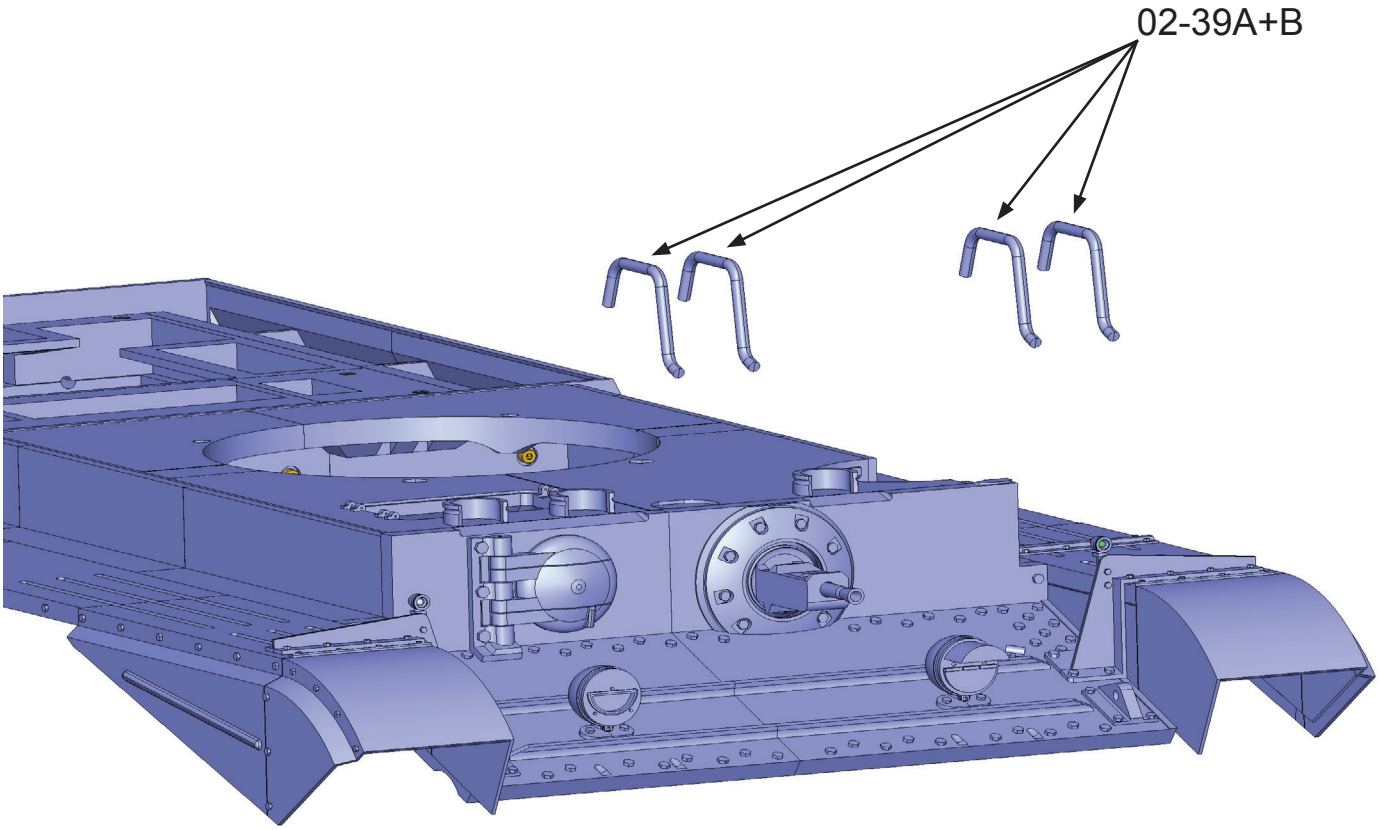

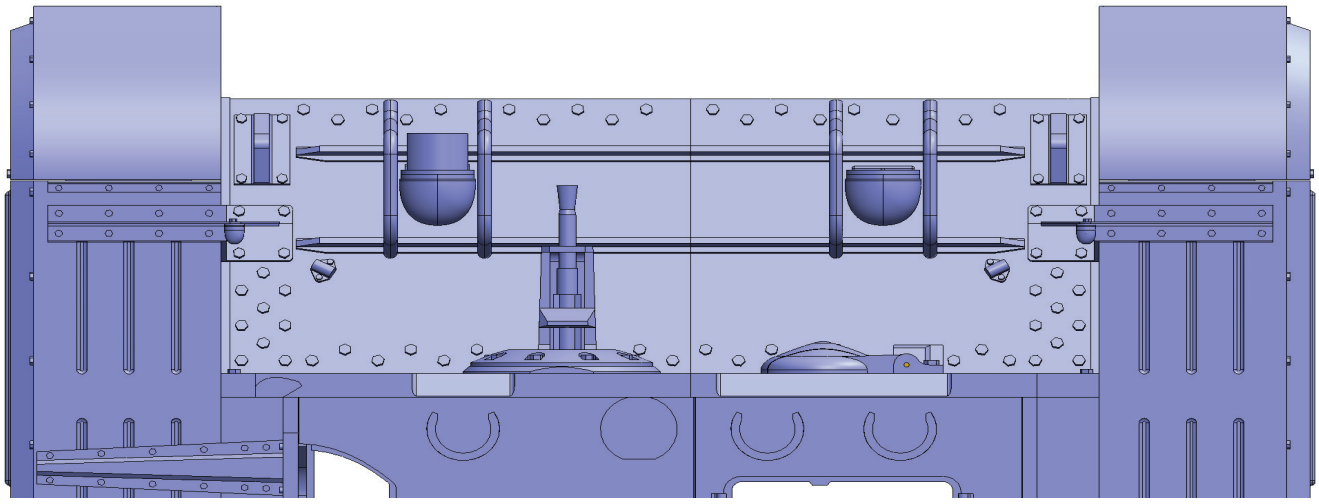

Glue the 4 prepared subassemblies of parts 02-39A+B.

Assembly 02 - Upper Hull

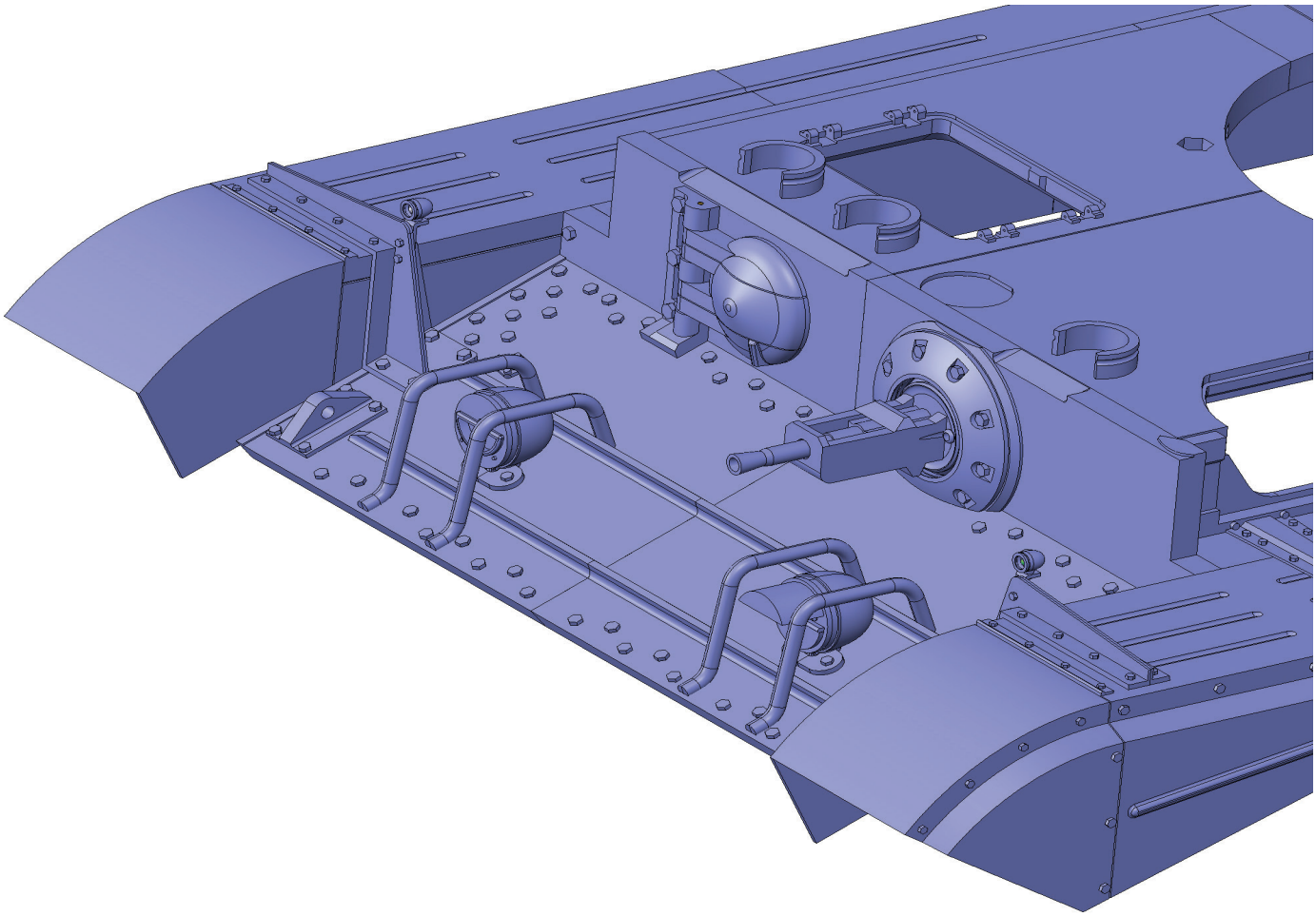

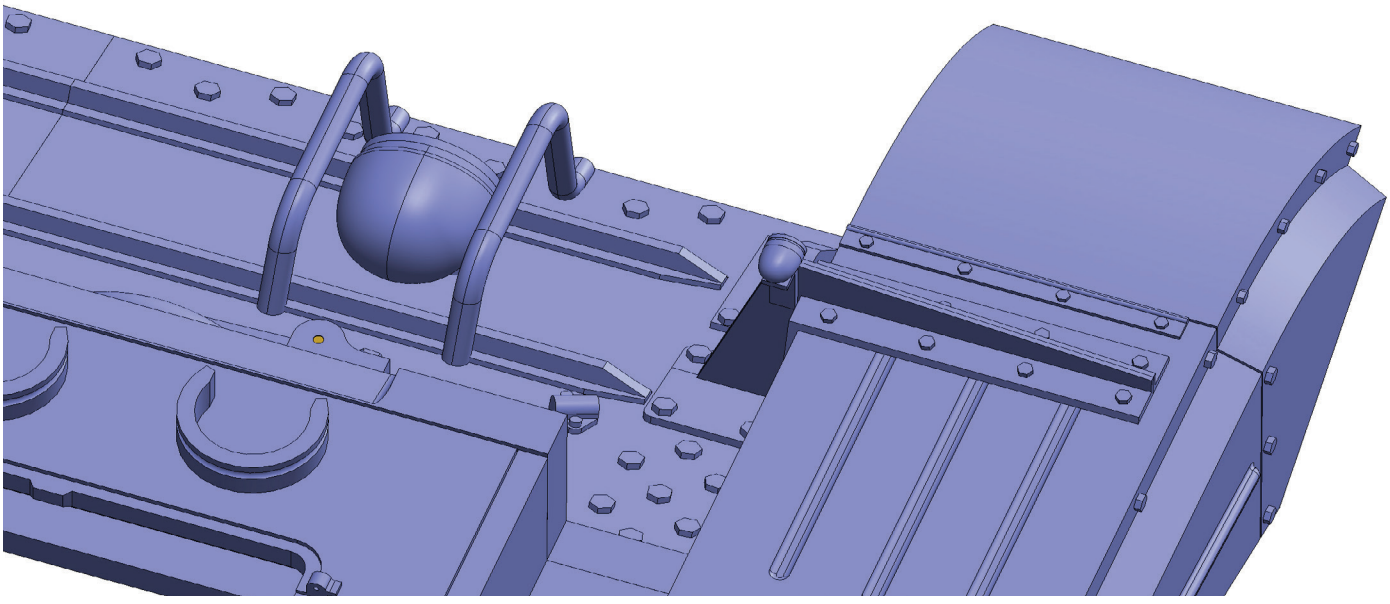

Correct position of parts 02-39A+B.

Assembly 02 - Upper Hull

2x

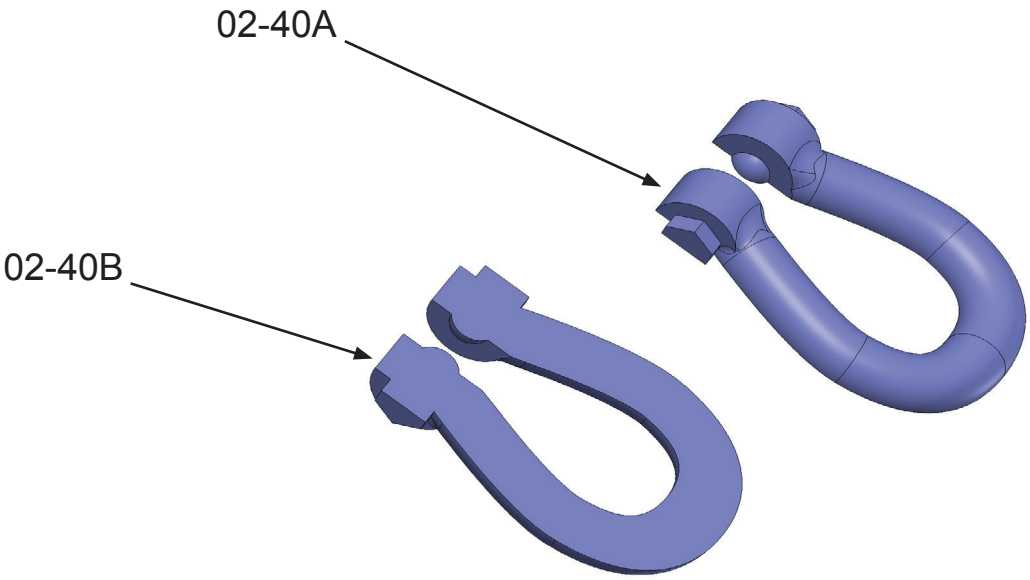

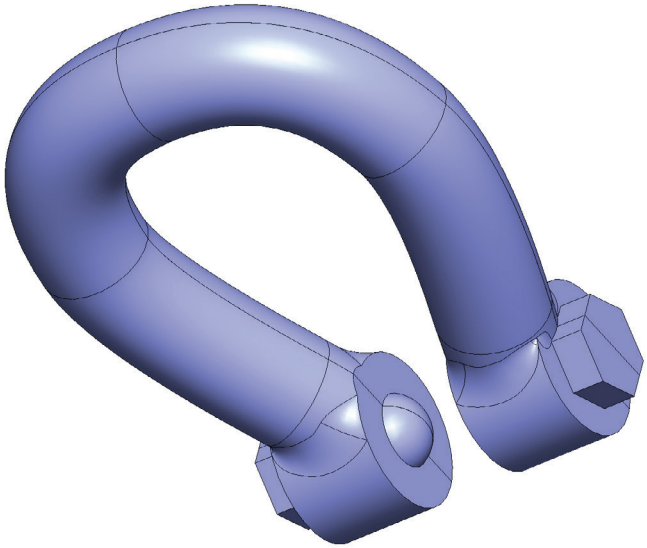

Glue parts 02-40A and 02-40B. You will need 2 such assemblies.

Assembly 02 - Upper Hull

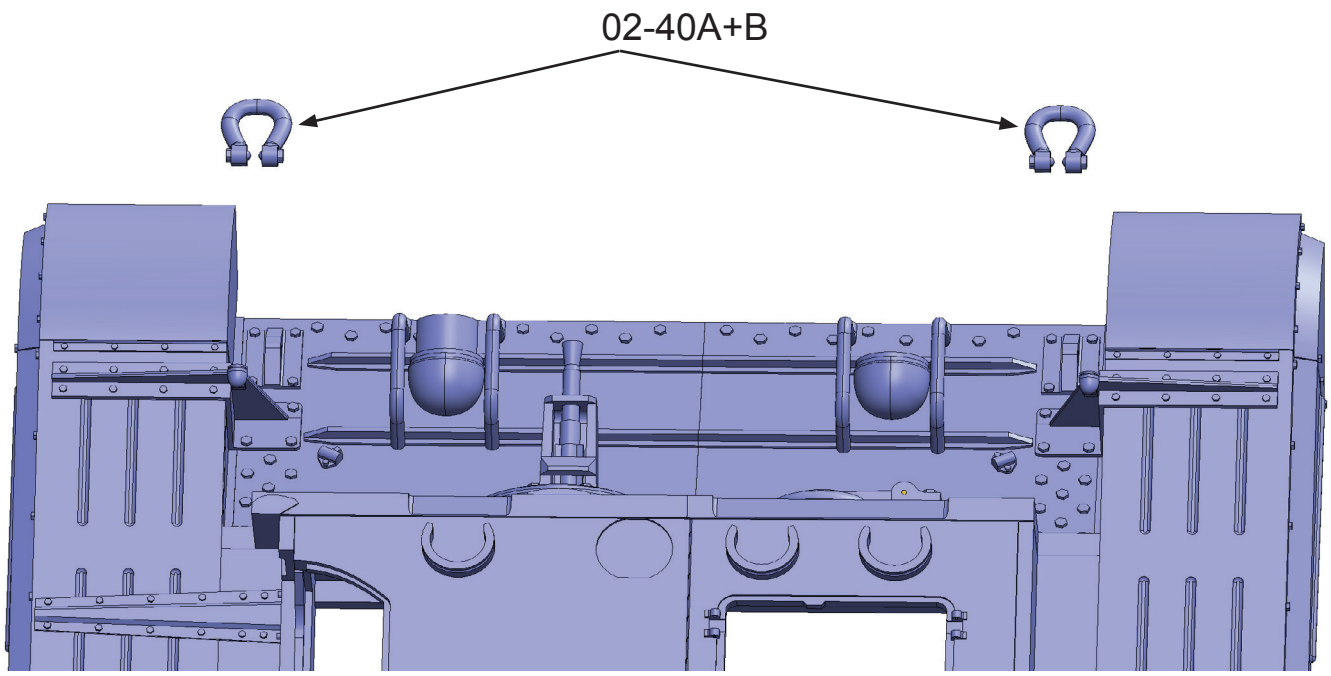

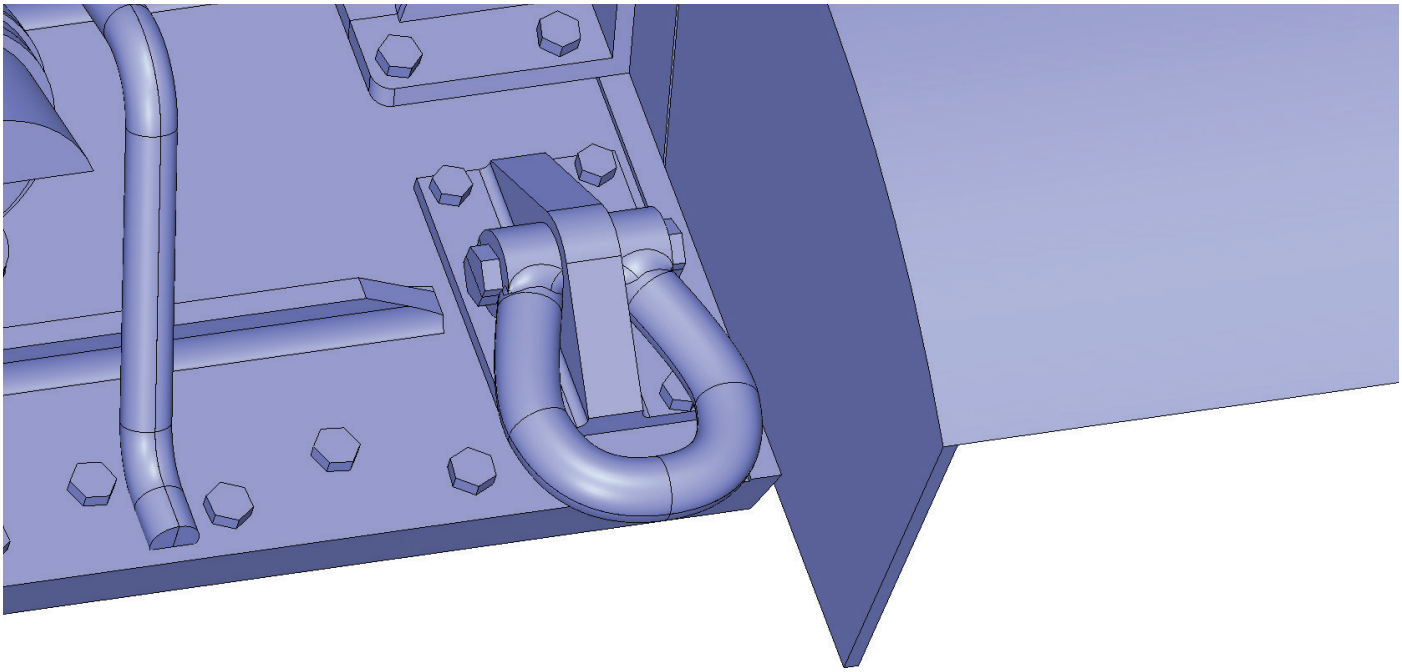

Attach both parts assemblies 02-40A+B.
Under normal circumstances,
they do not need to be glued and can remain partially mobile.

Assembly 02 - Upper Hull

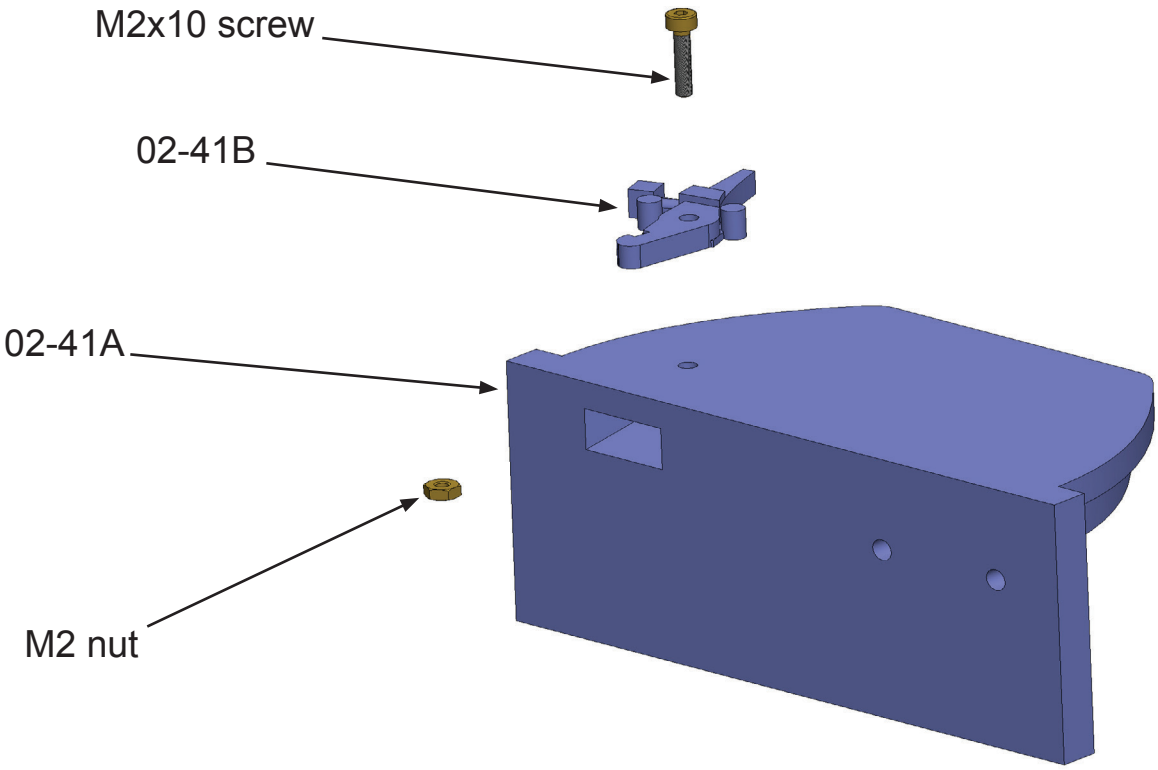

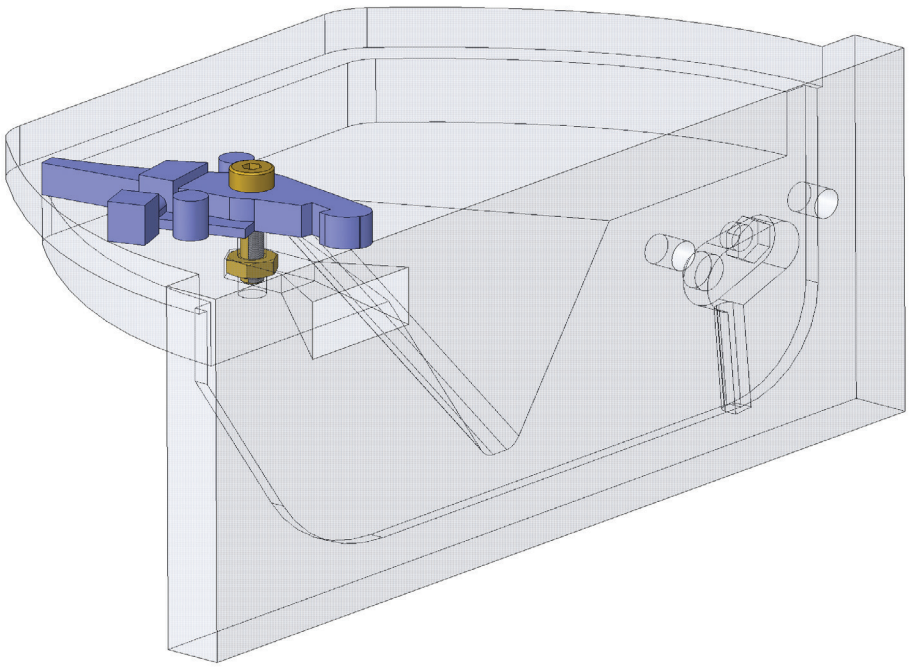

Insert M2 nut into part 02-41A.
Connect parts 02-41A and 02-41B with a M2x10 screw.
Part 02-41B must rotate freely.

Assembly 02 - Upper Hull

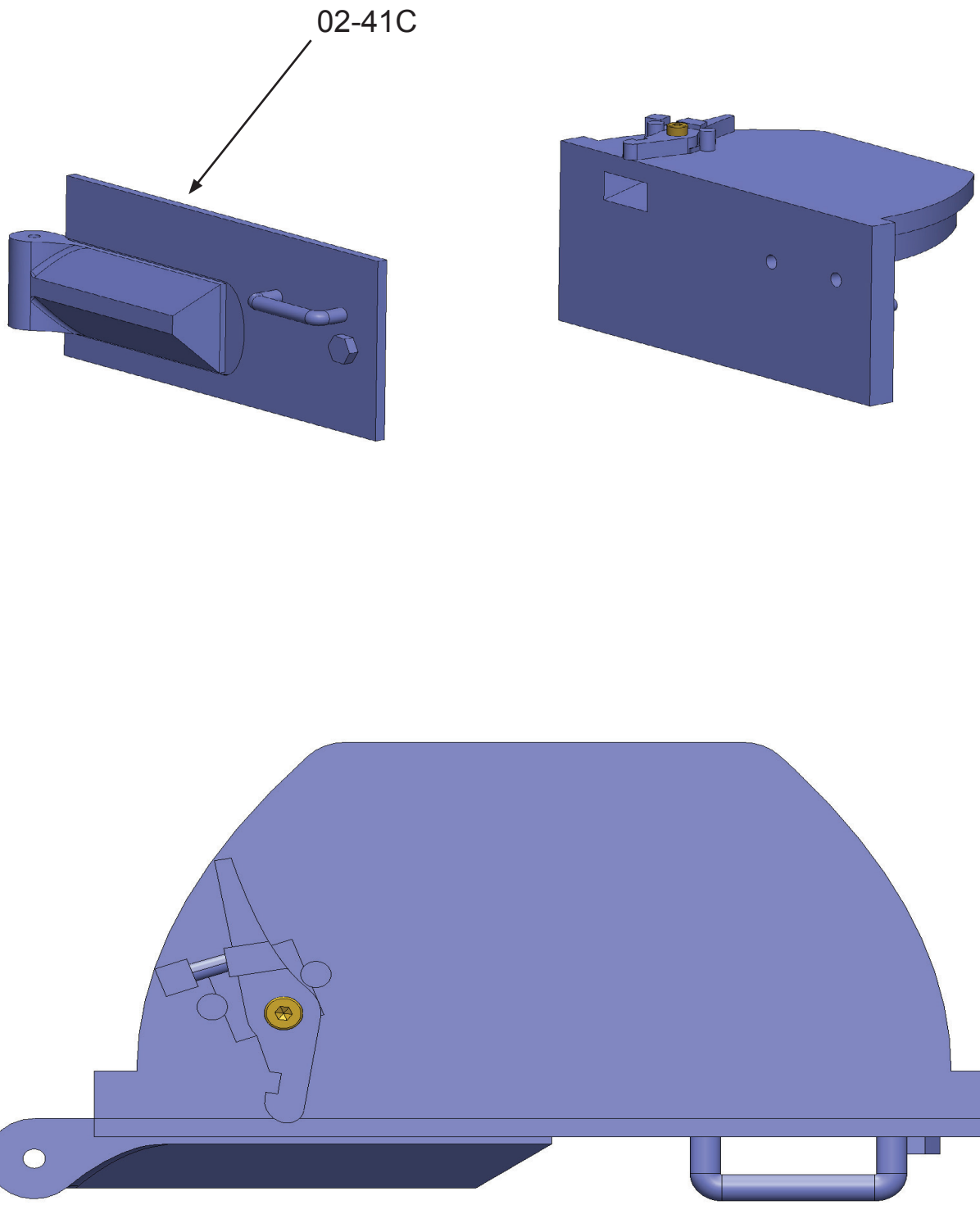

Glue part 02-41C.

Assembly 02 - Upper Hull

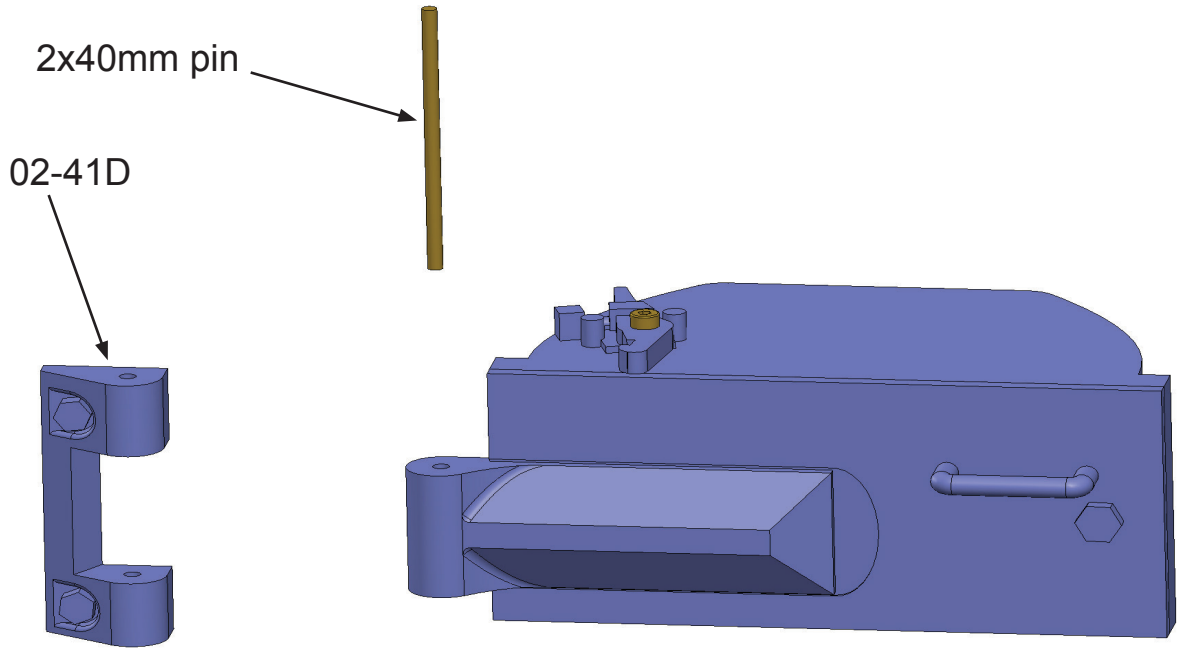

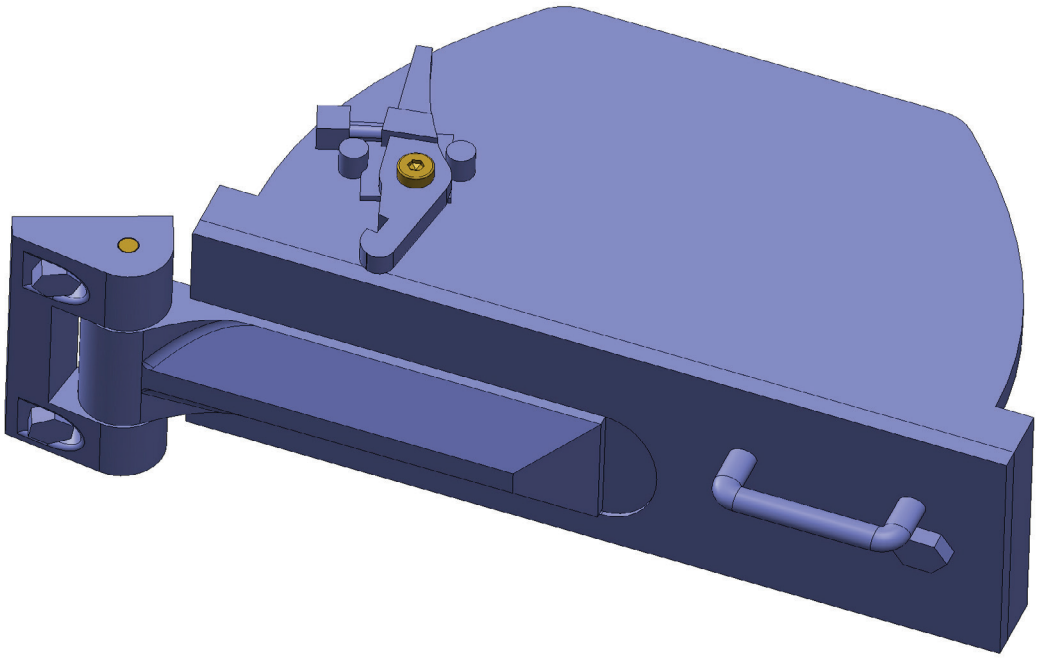

Add part 02-41D.
Join with a pin (wire) with a diameter of 2 mm and a length of 40 mm.
Fix with glue. The part must rotate freely.

Assembly 02 - Upper Hull

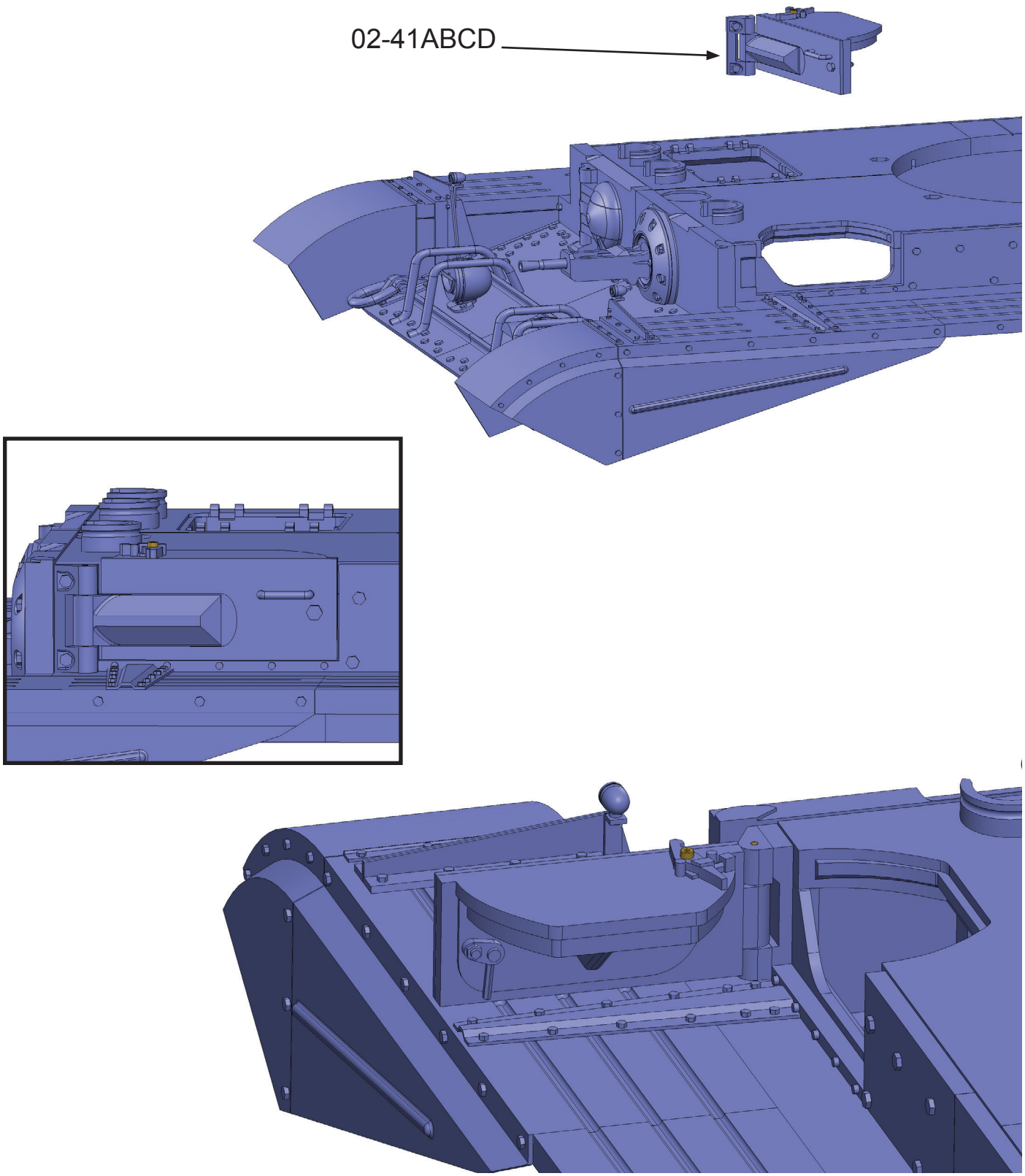

Glue the parts assemblies 02-41A to 02-41D.

Assembly 02 - Upper Hull

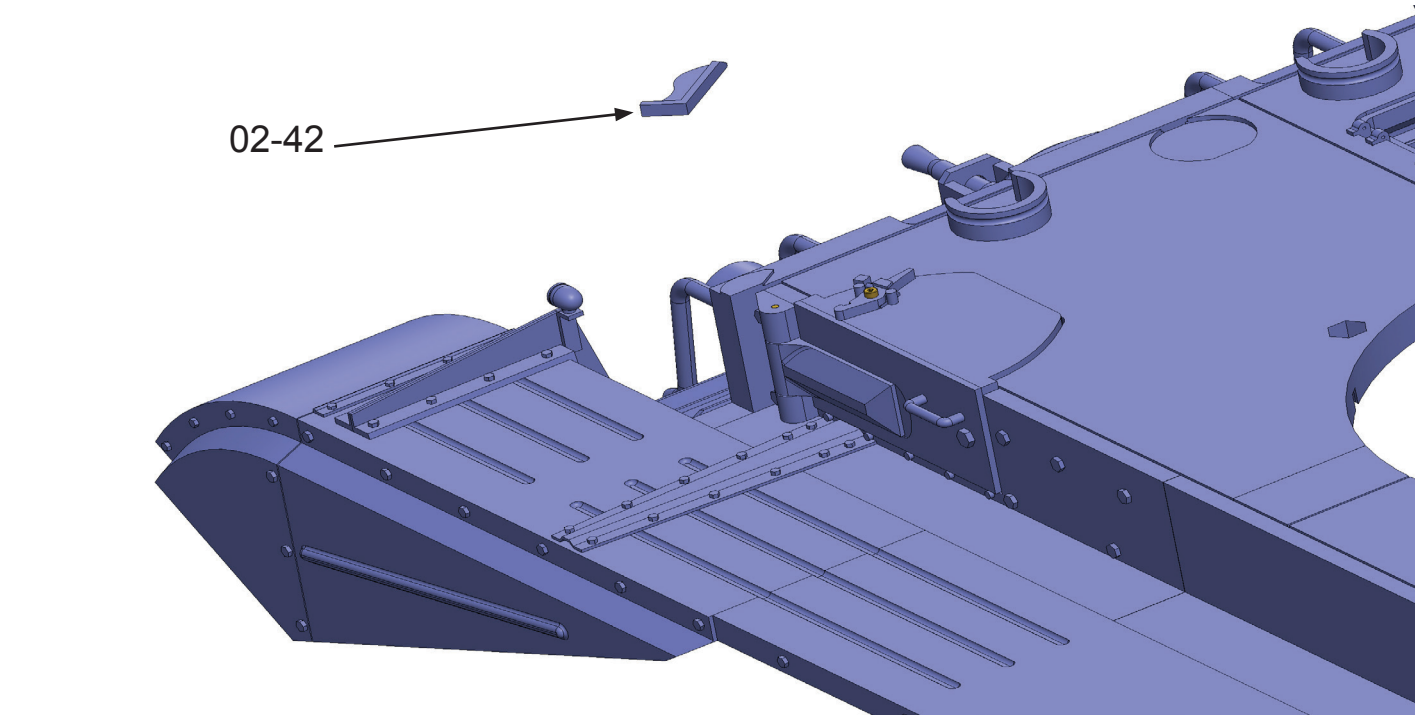

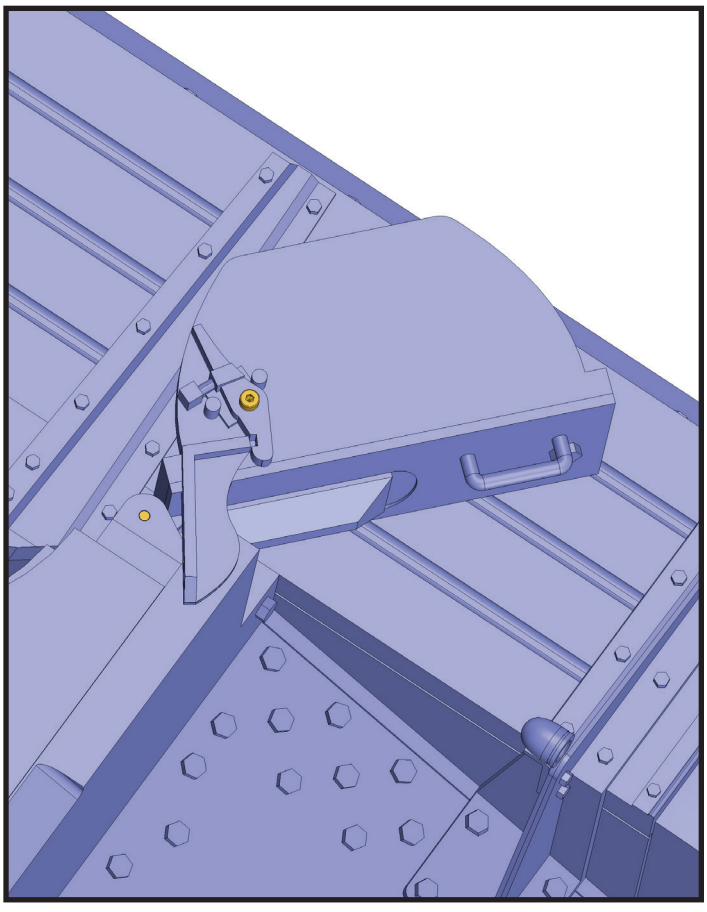

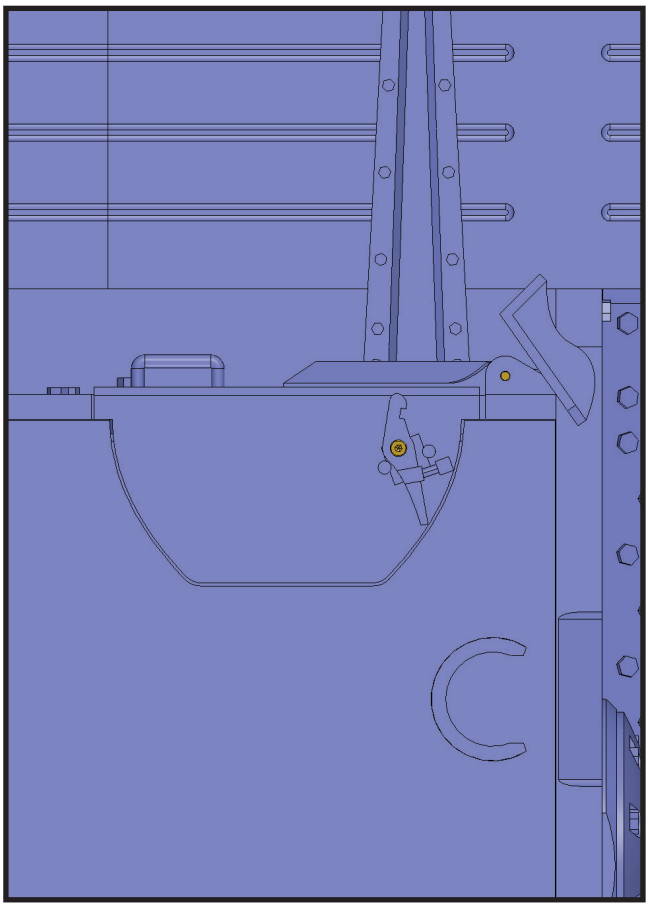

Glue part 02-42.

Assembly 02 - Upper Hull

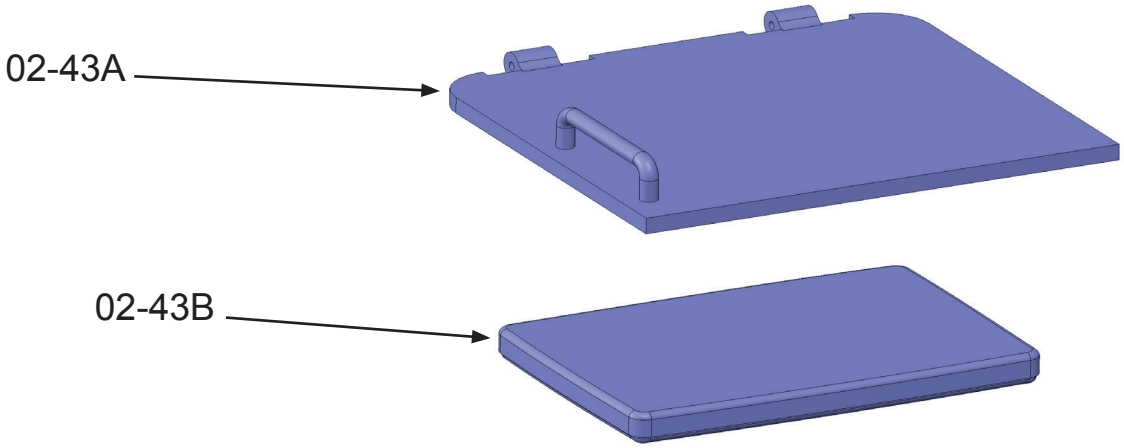

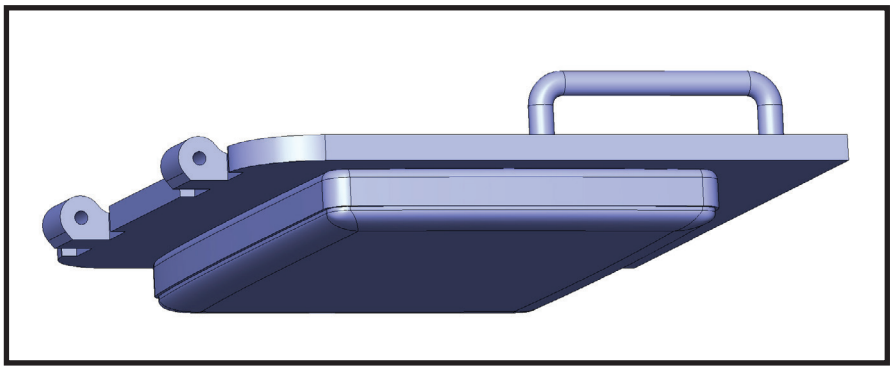

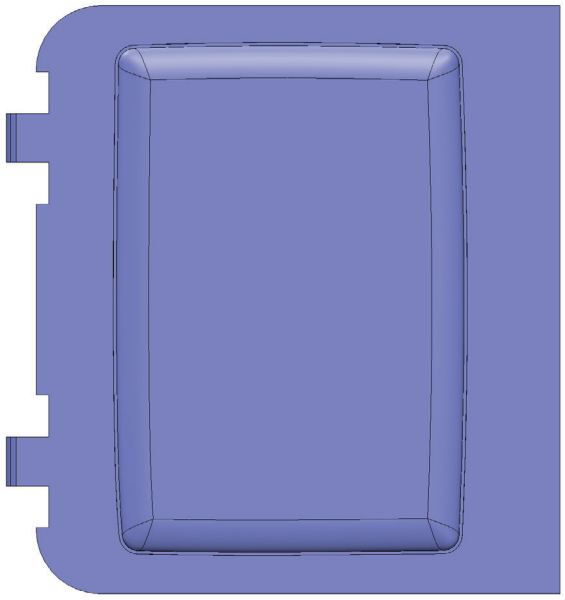

Glue parts 02-43A and 02-43B

Assembly 02 - Upper Hull

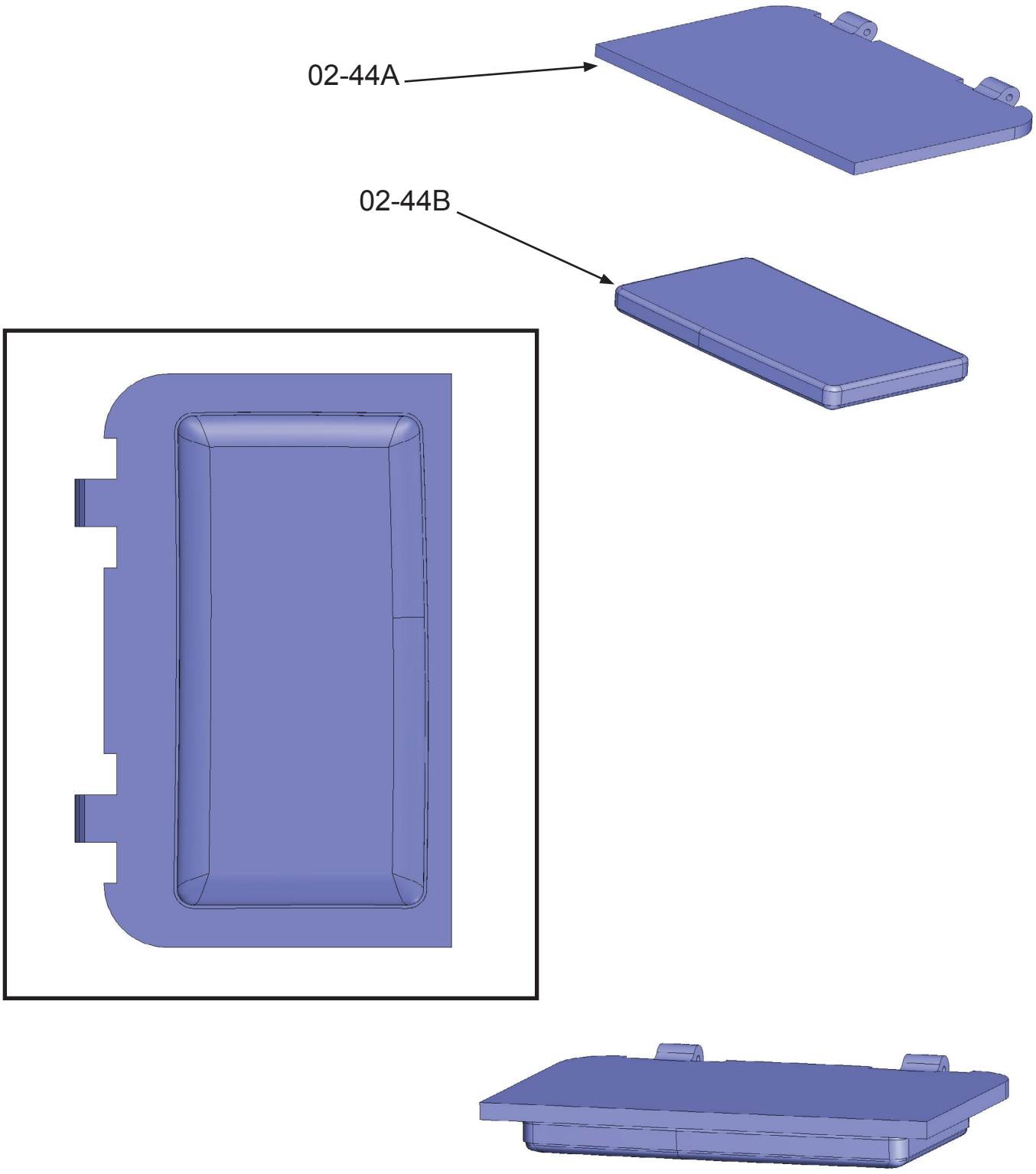

Glue parts 02-44A and 02-44B.

Assembly 02 - Upper Hull

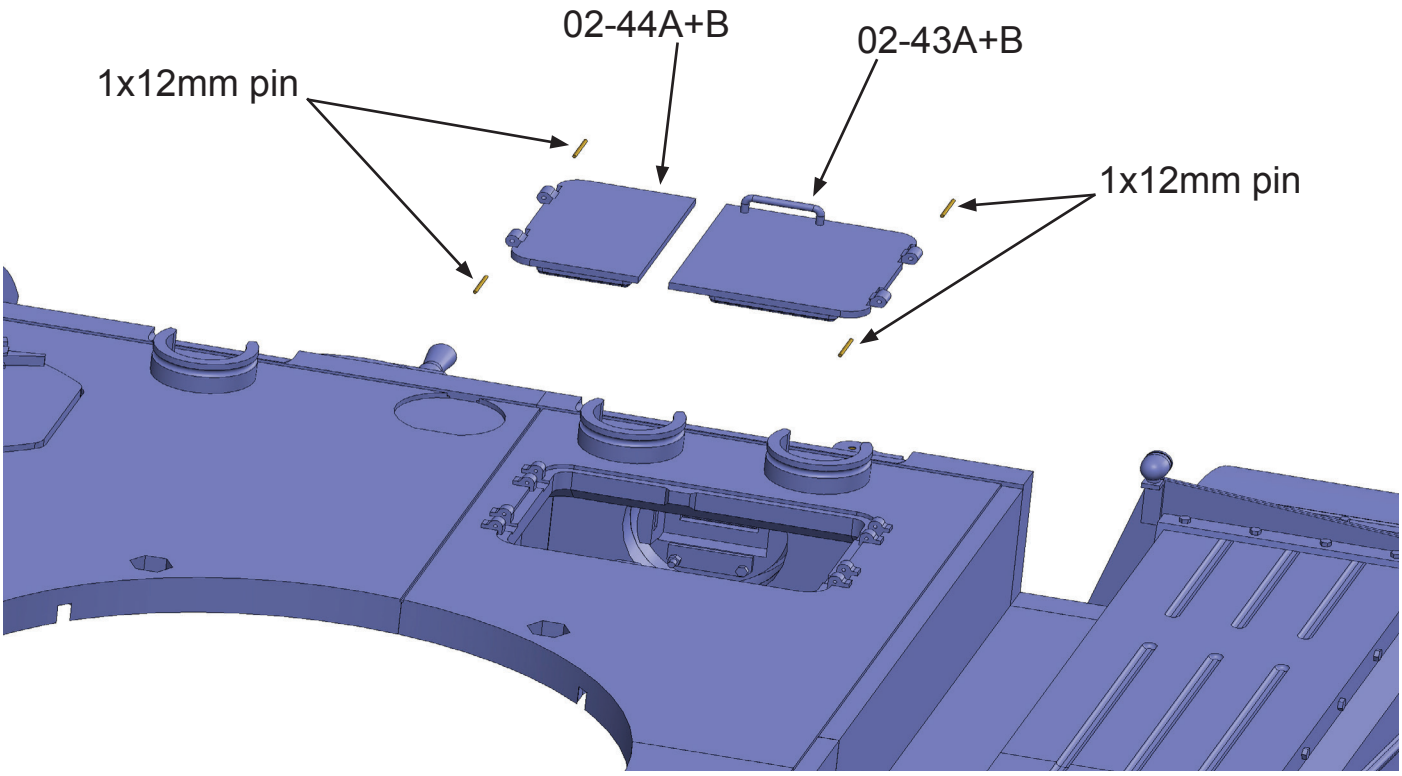

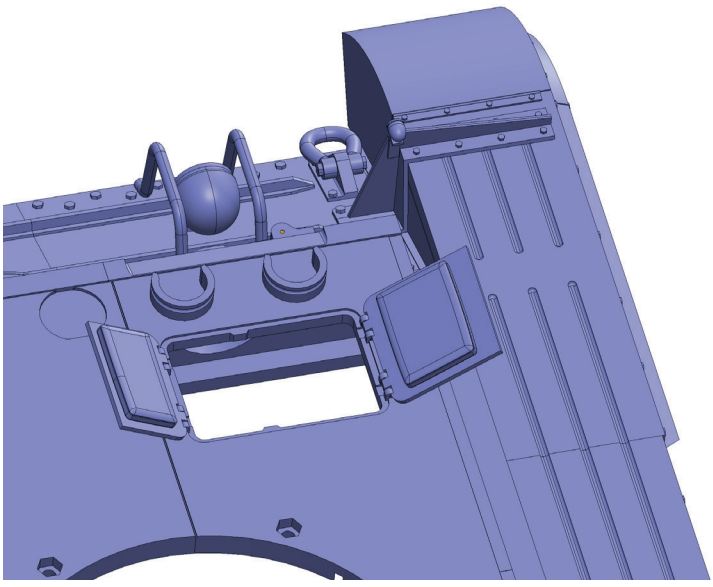

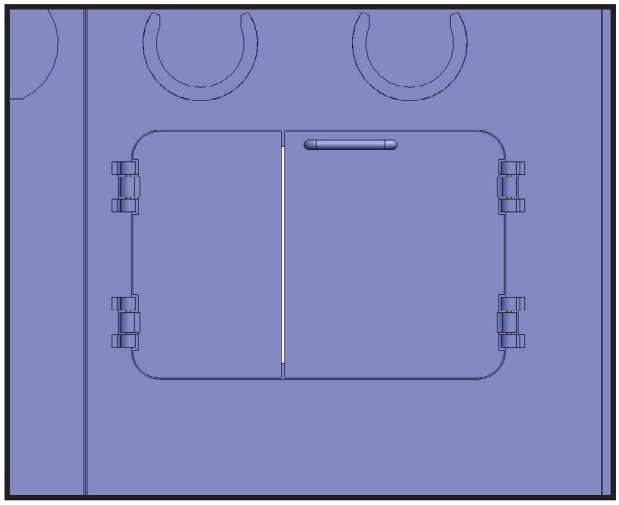

Attach the 02-43A+B and 02-44A+B parts assemblies.
Use a wire with a diameter of 1 mm. The length of the wires is 12 mm.
We recommend sliding the wire into place first and only then cutting it to size.

Assembly 02 - Upper Hull

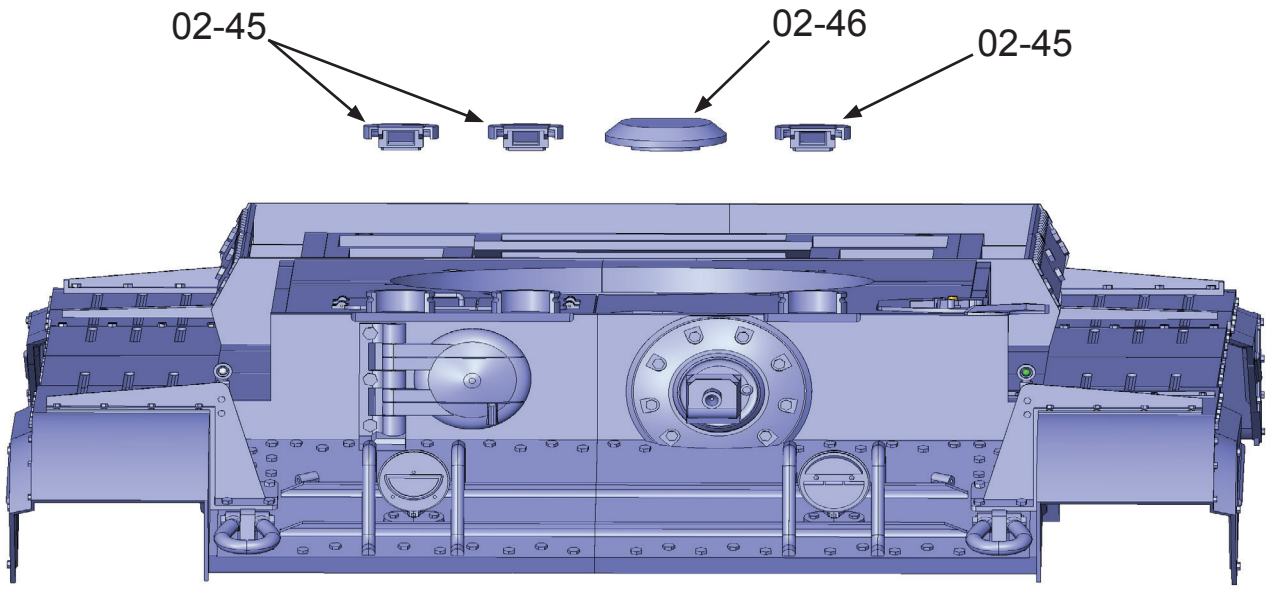

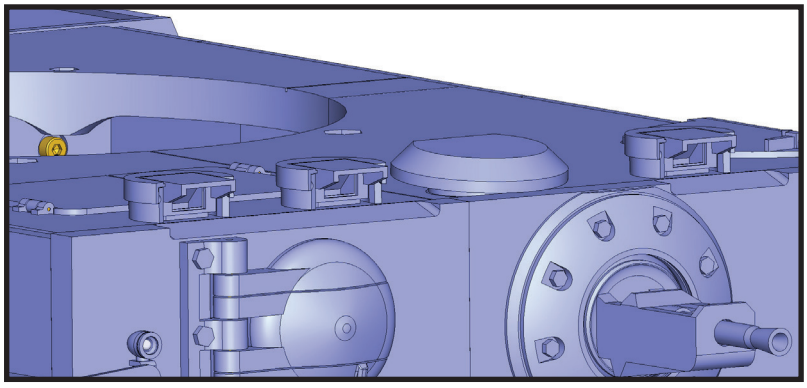

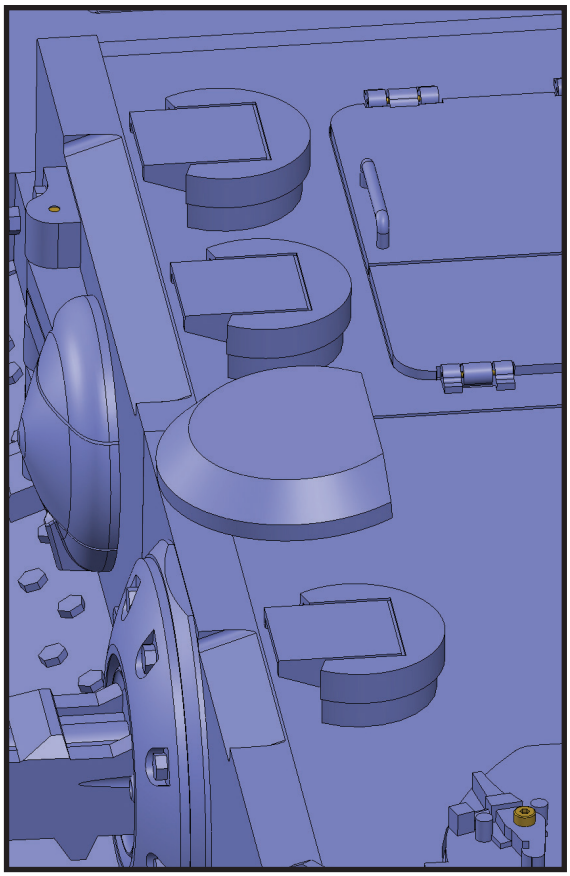

Attach three parts 02-45. The parts do not need to be glued.
They can be partially rotated.Glue part 02-46.

Assembly 02 - Upper Hull

3x

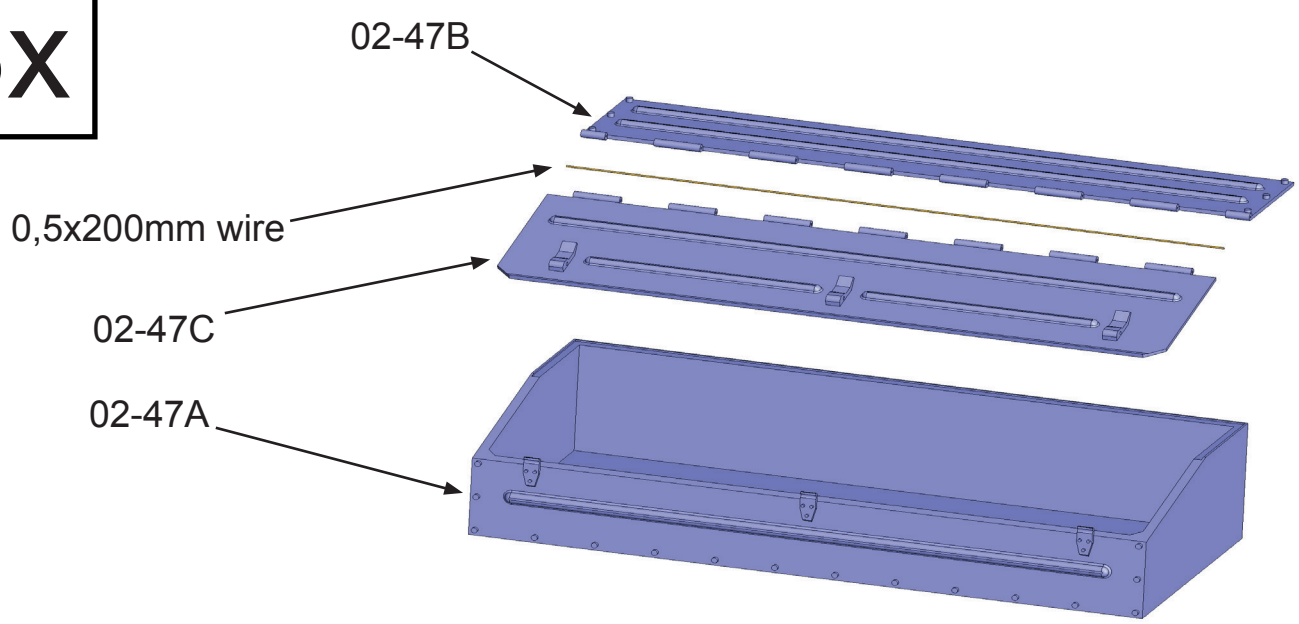

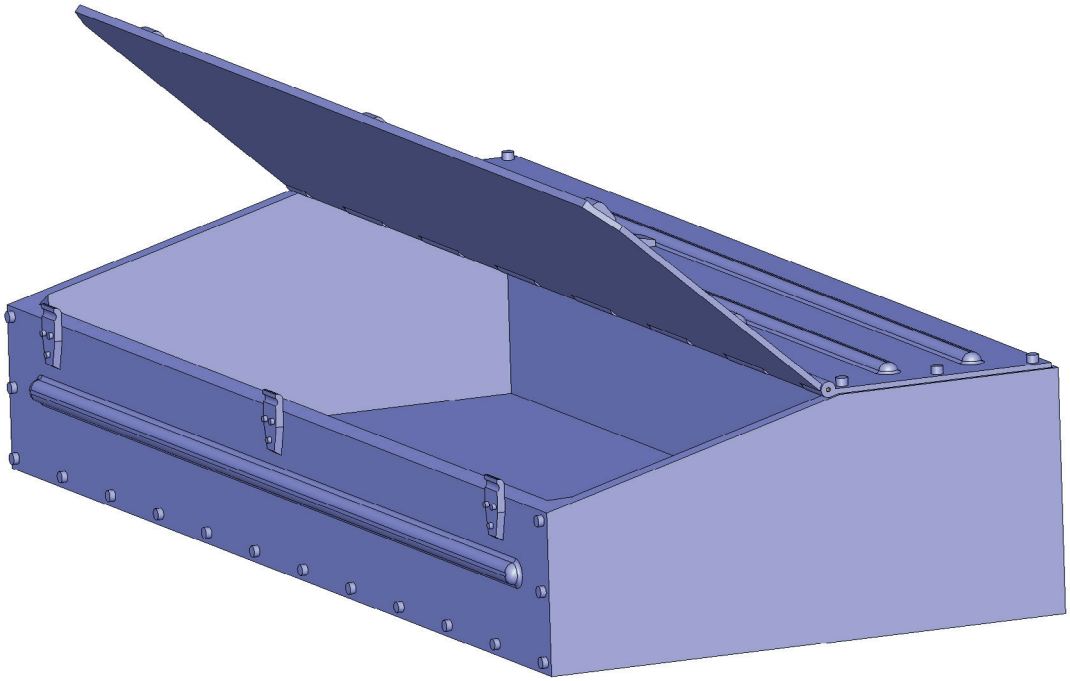

Glue parts 02-47A and 02-47B together. Attach the part 02-47C.
Use a wire with a diameter of 0.5 mm. The length of the wire is 200 mm.
You will need 3 such assemblies.

Assembly 02 - Upper Hull

3x

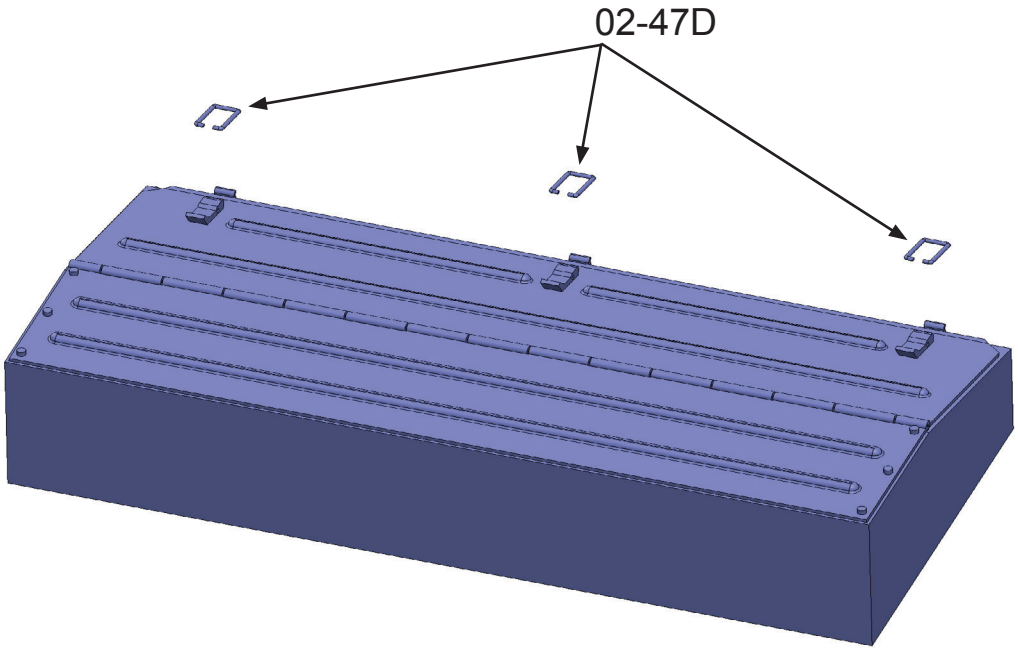

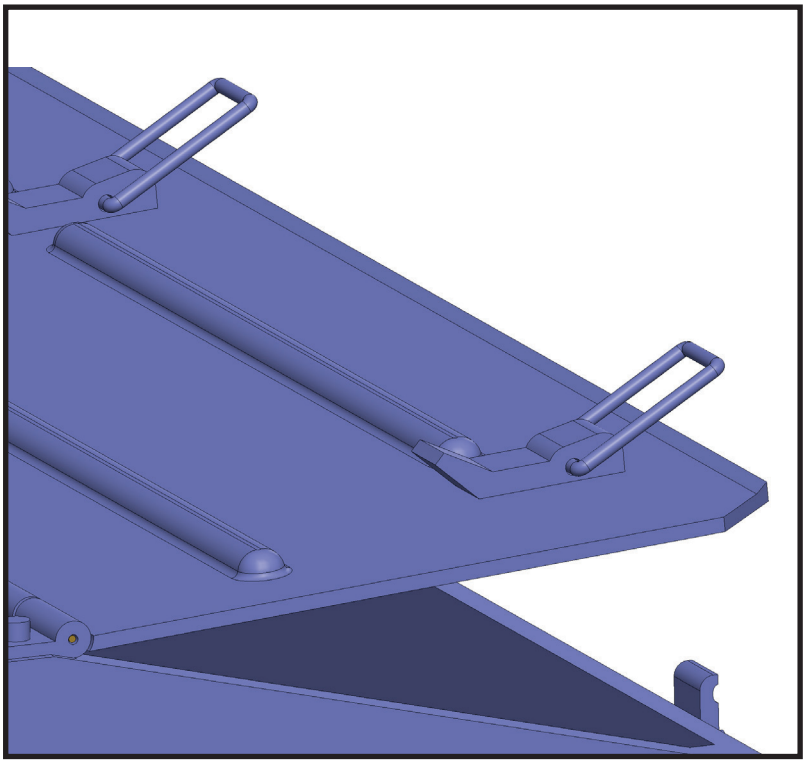

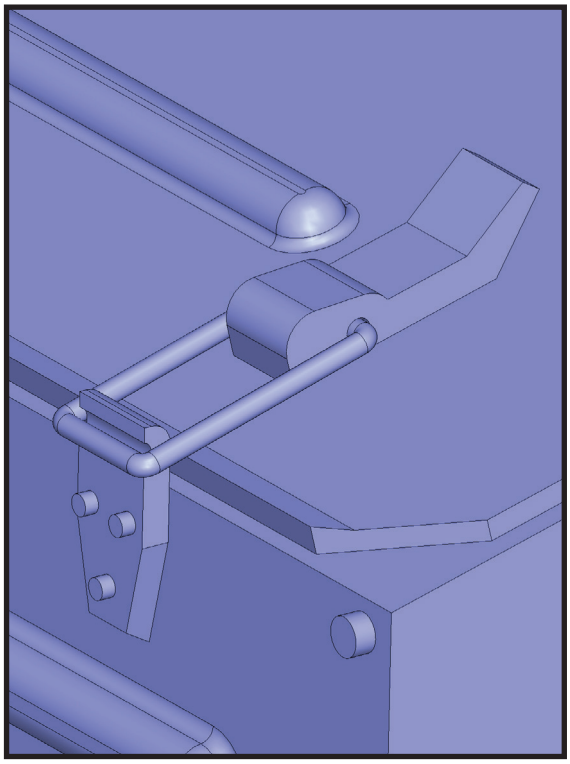

Attach three parts 02-47D. The parts do not need to be glued.
They can be partially rotated.
You can use a wire with a diameter of 1mm instead of parts 02-47D.

Assembly 02 - Upper Hull

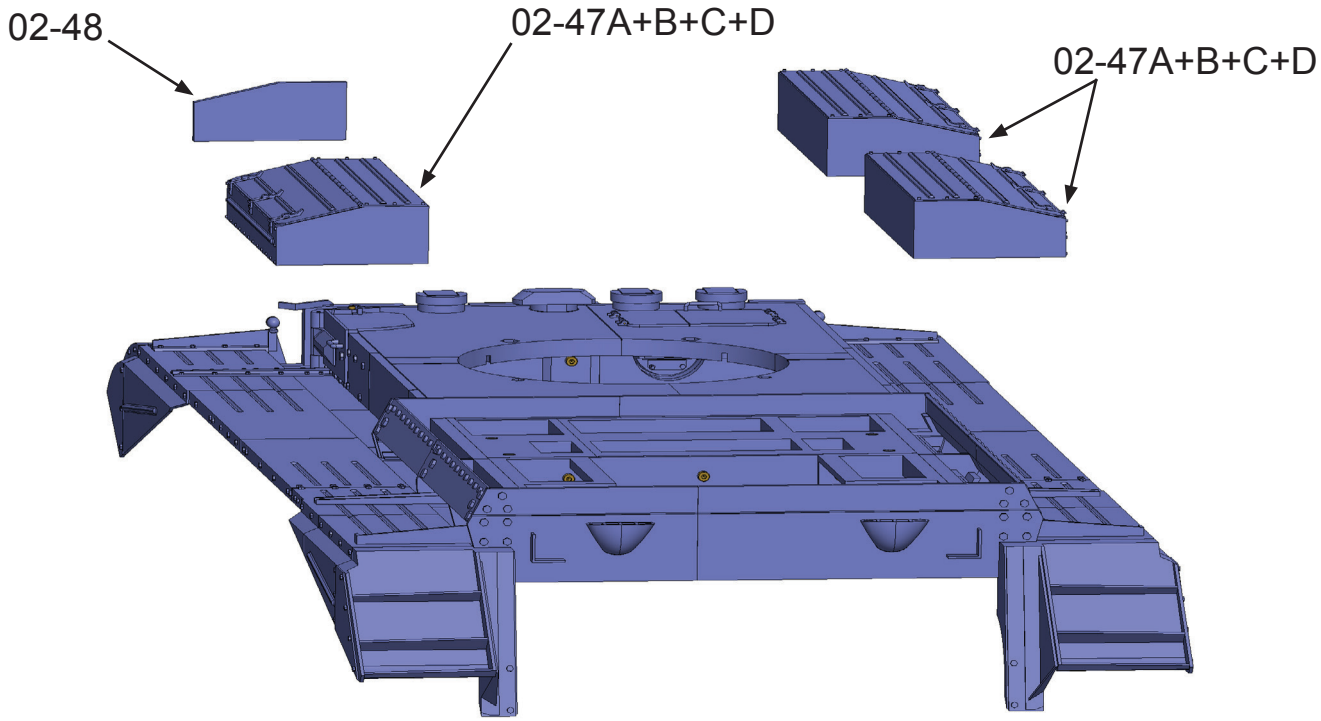

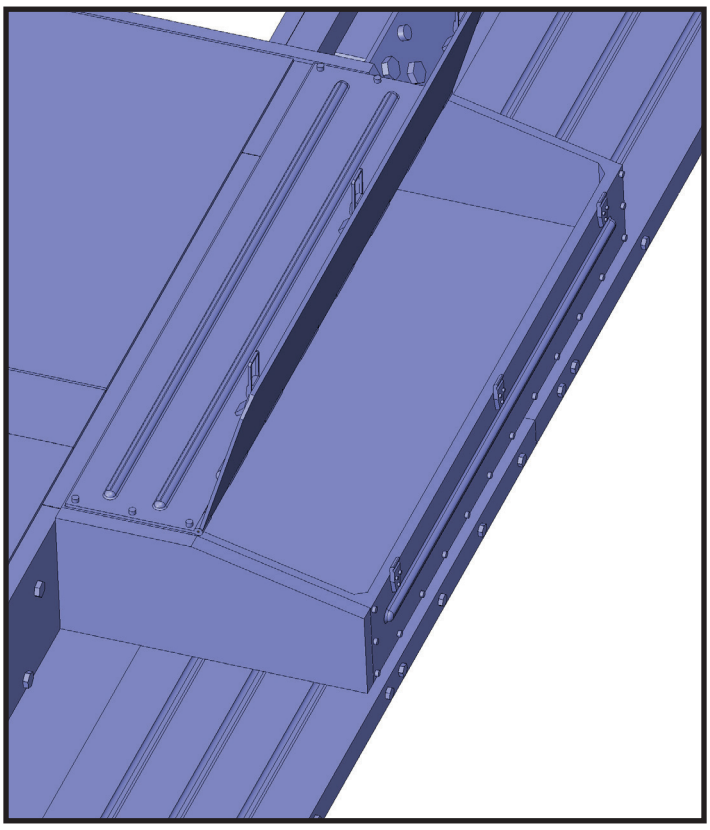

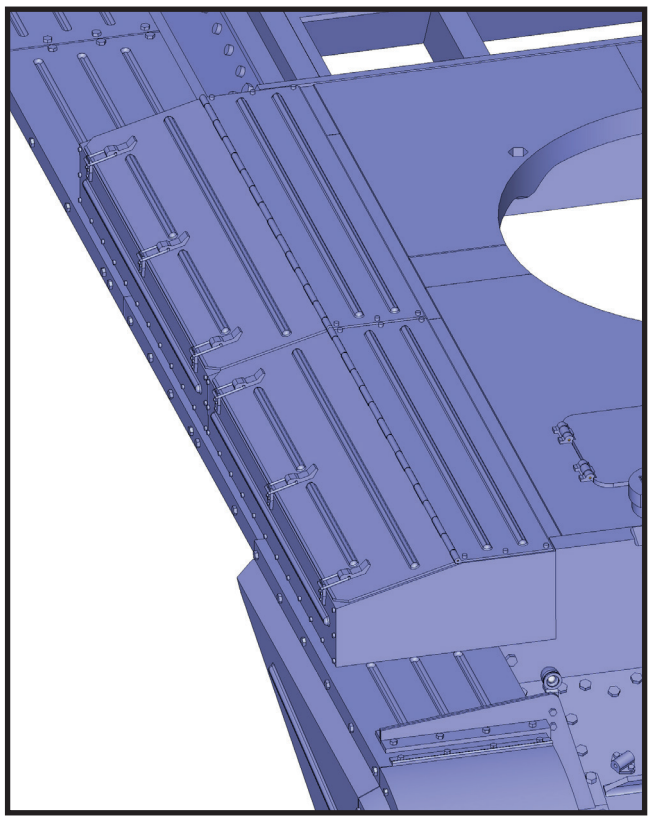

Glue three parts assemblies 02-47A+B+C+D and one part 02-48 .

Assembly 02 - Upper Hull

2x

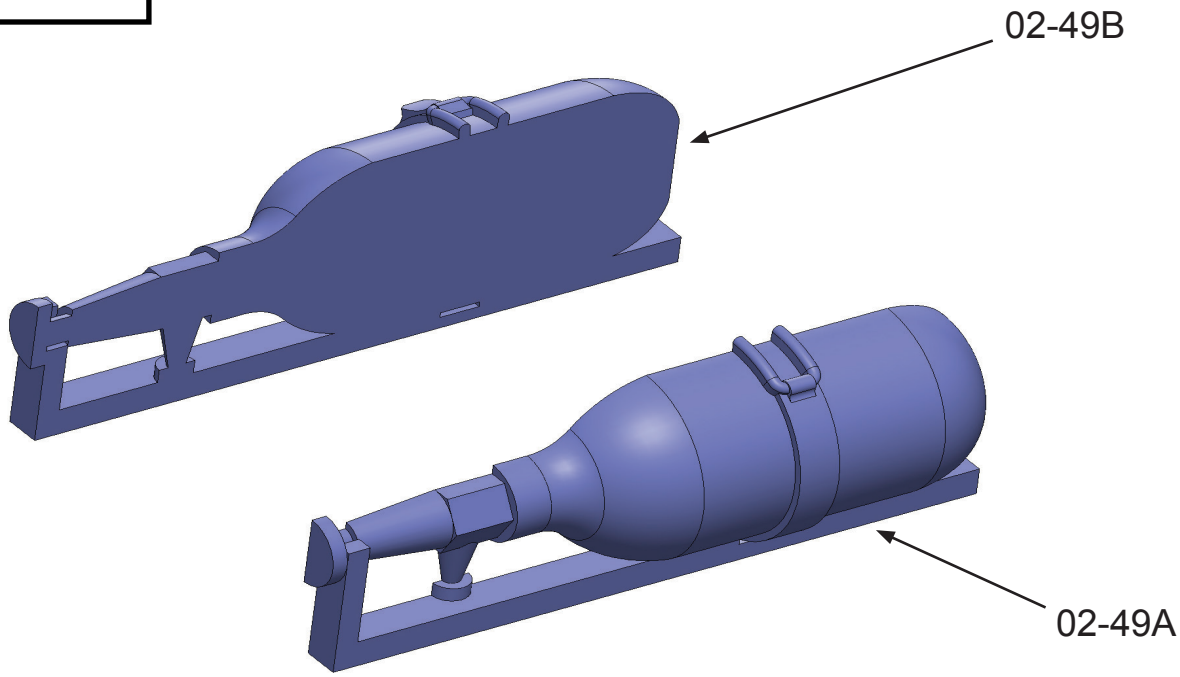

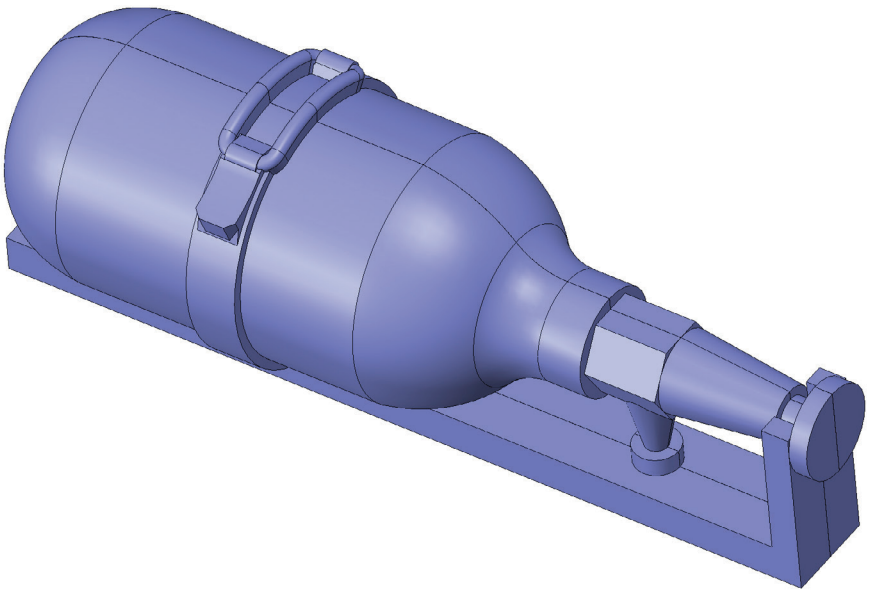

Glue parts 02-49A and 02-49B. You will need two pieces.

Assembly 02 - Upper Hull

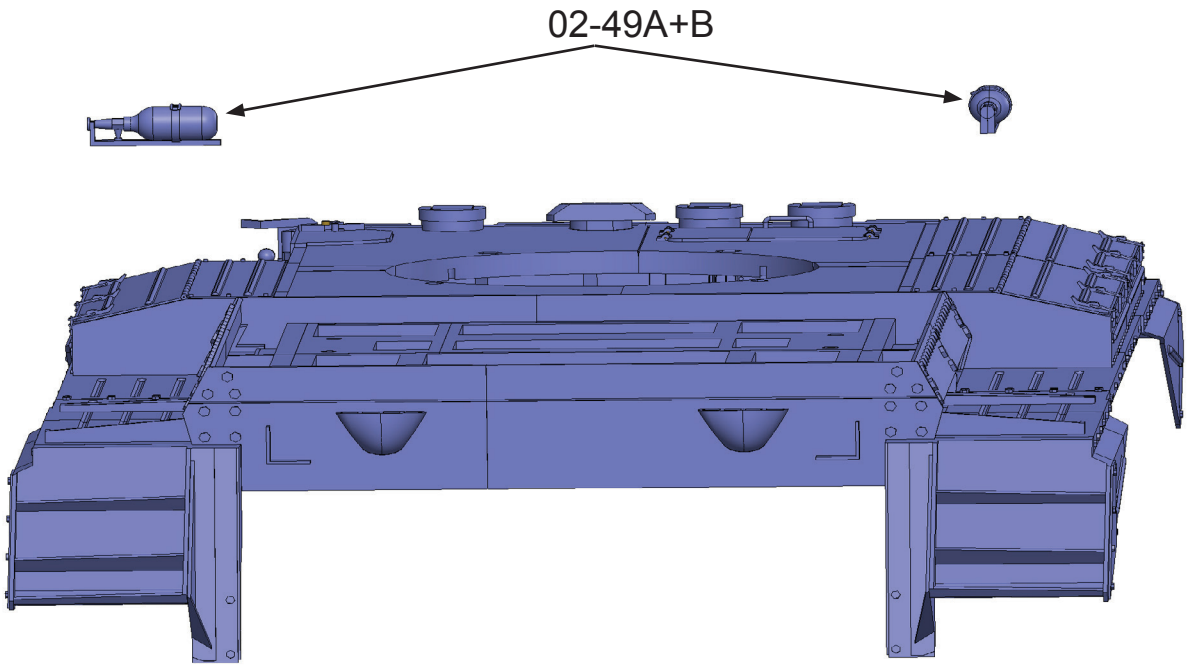

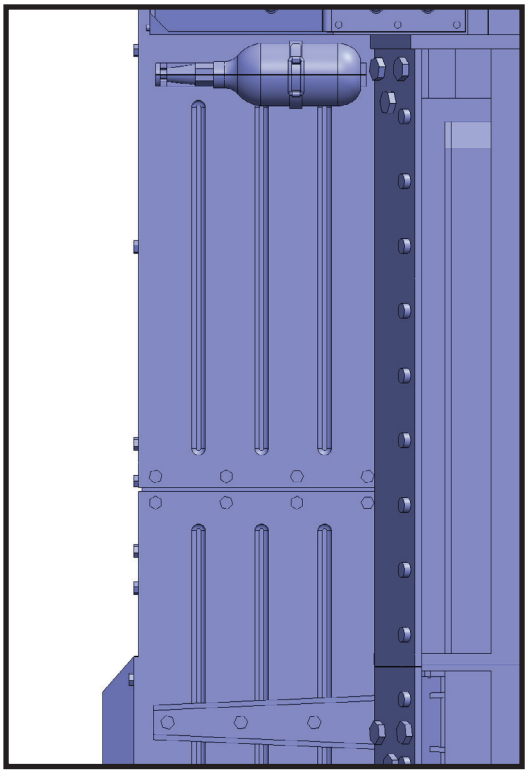

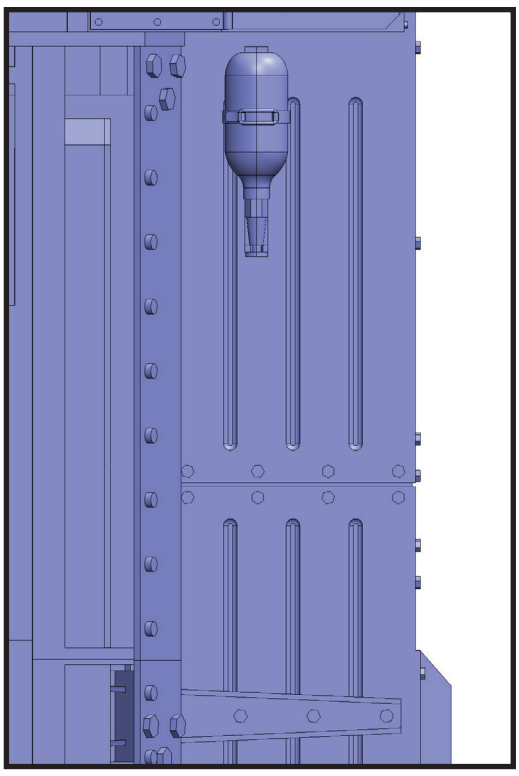

Glue parts 02-49A+B (2 pieces).

Assembly 02 - Upper Hull

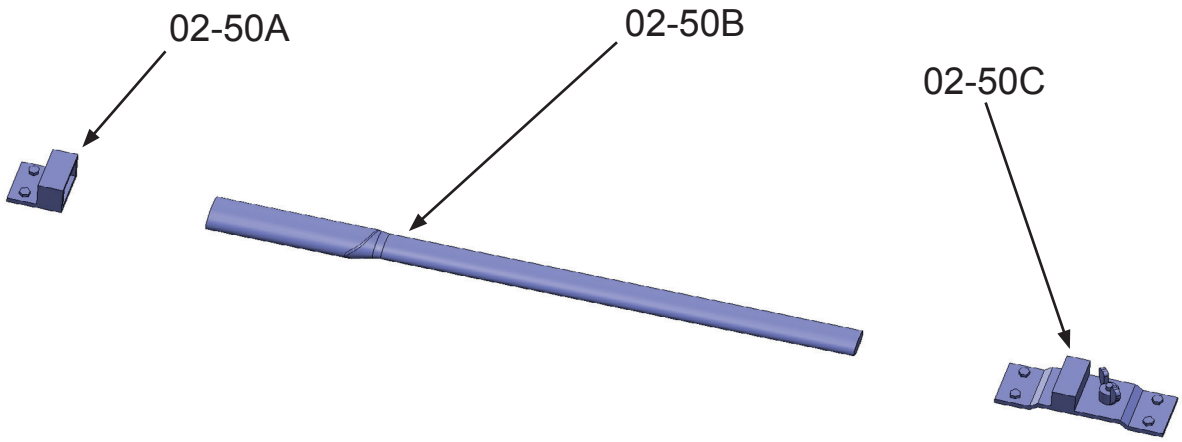

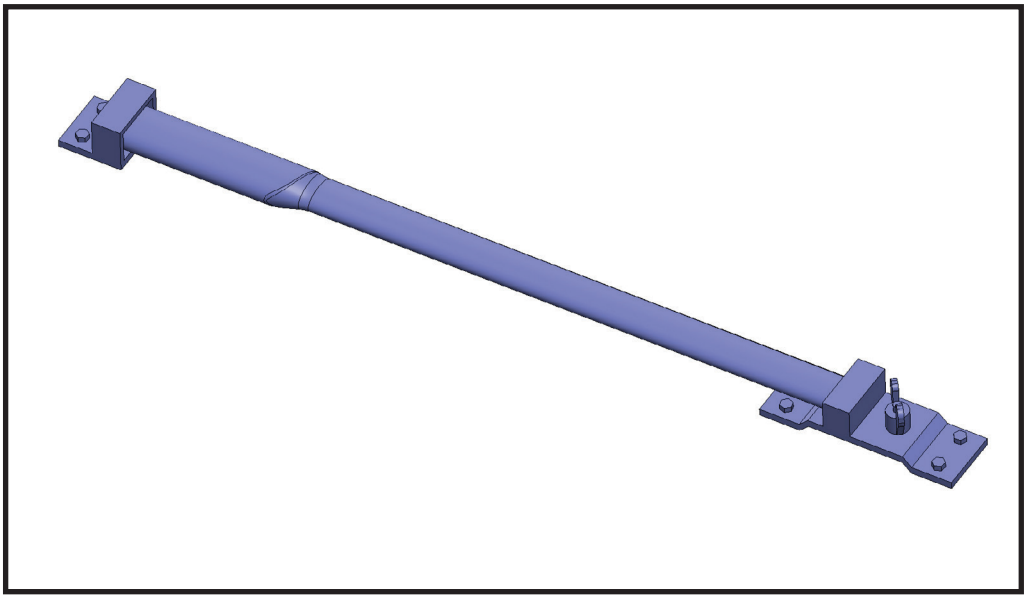



Glue parts 02-50A to 02-50C.

Assembly 02 - Upper Hull

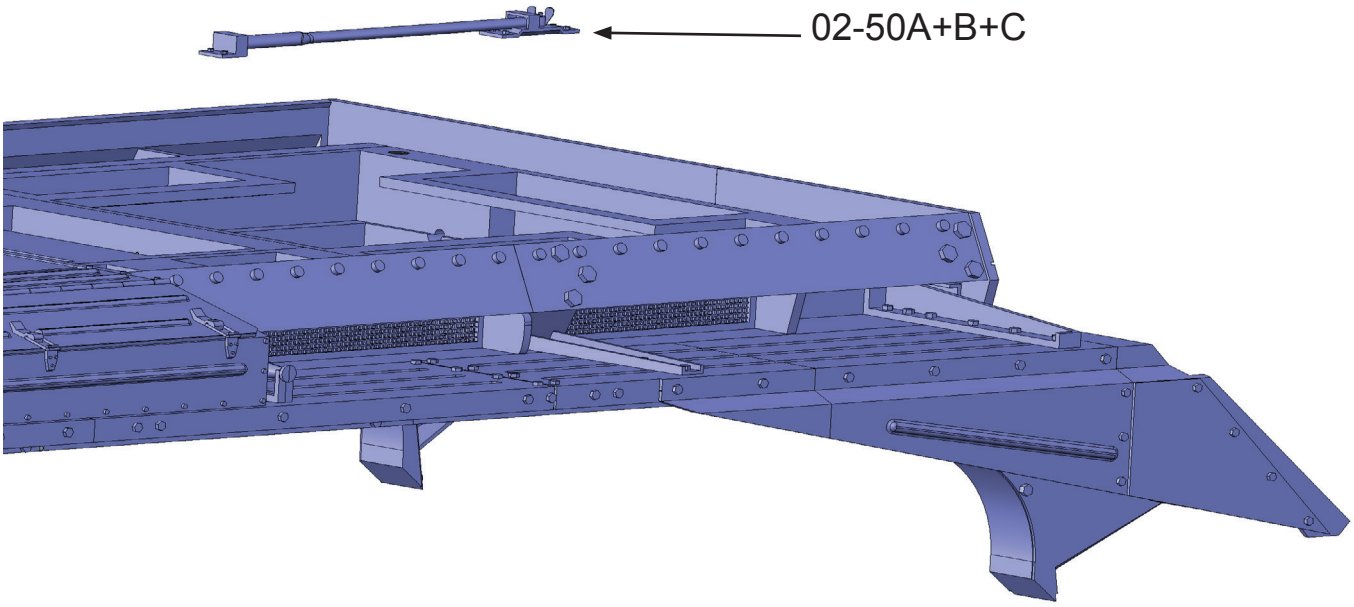

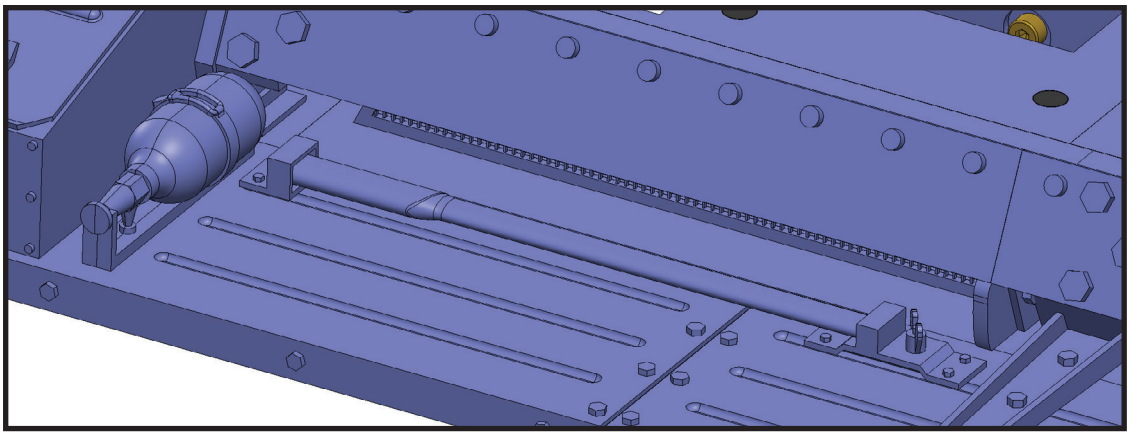

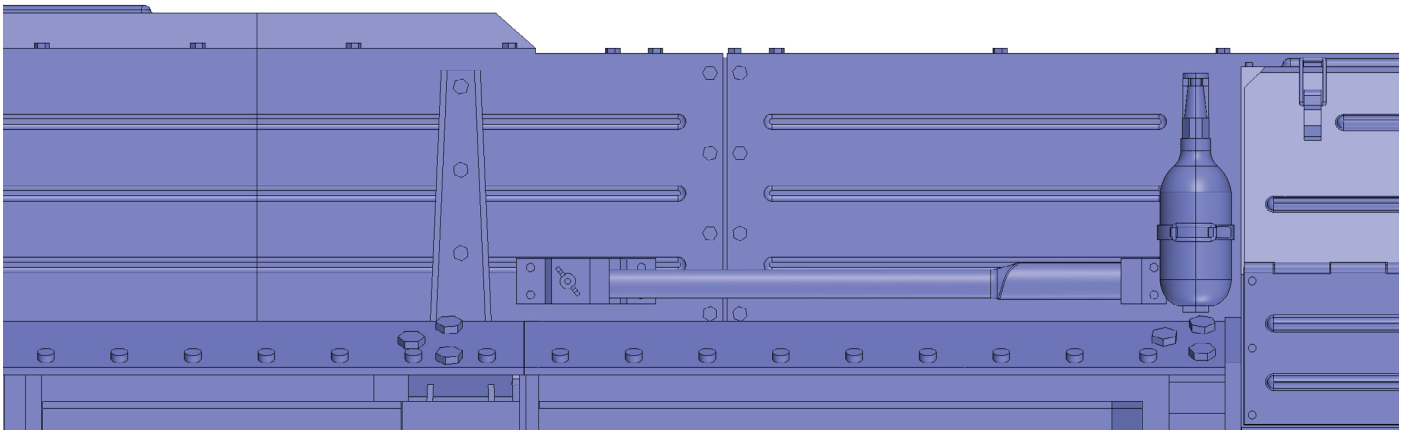

Glue the parts assemblies from 02-50A to 02-50C.

Assembly 02 - Upper Hull

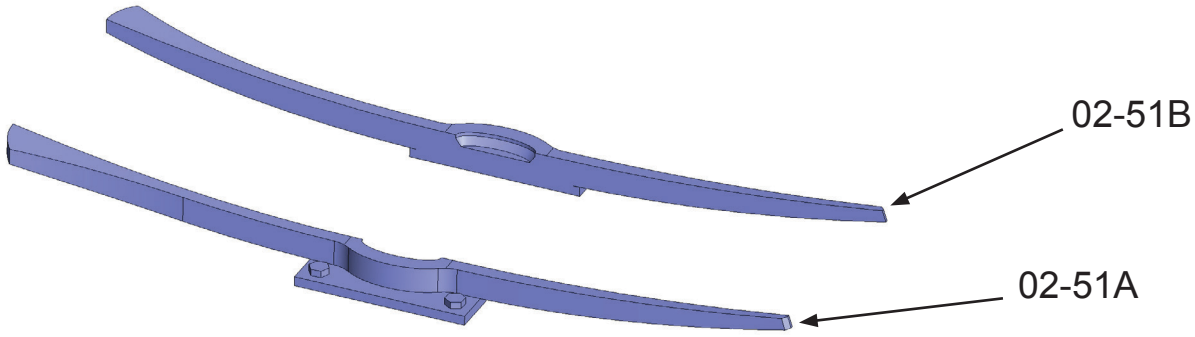

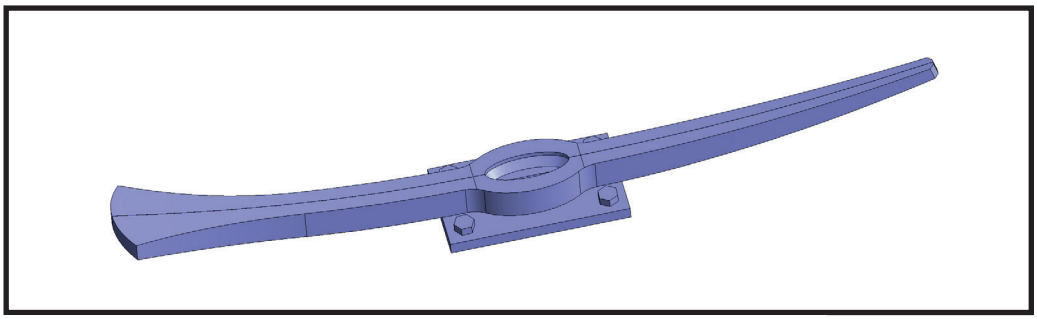

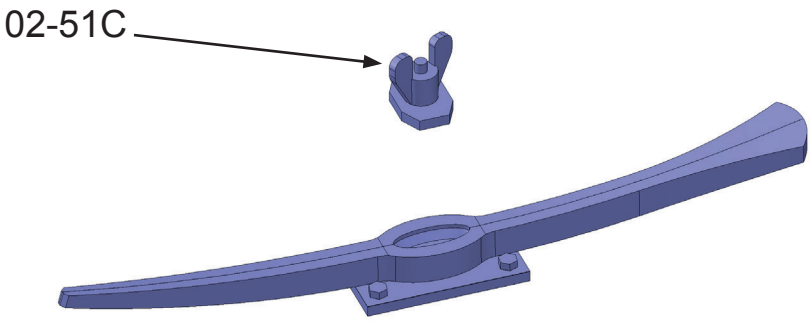

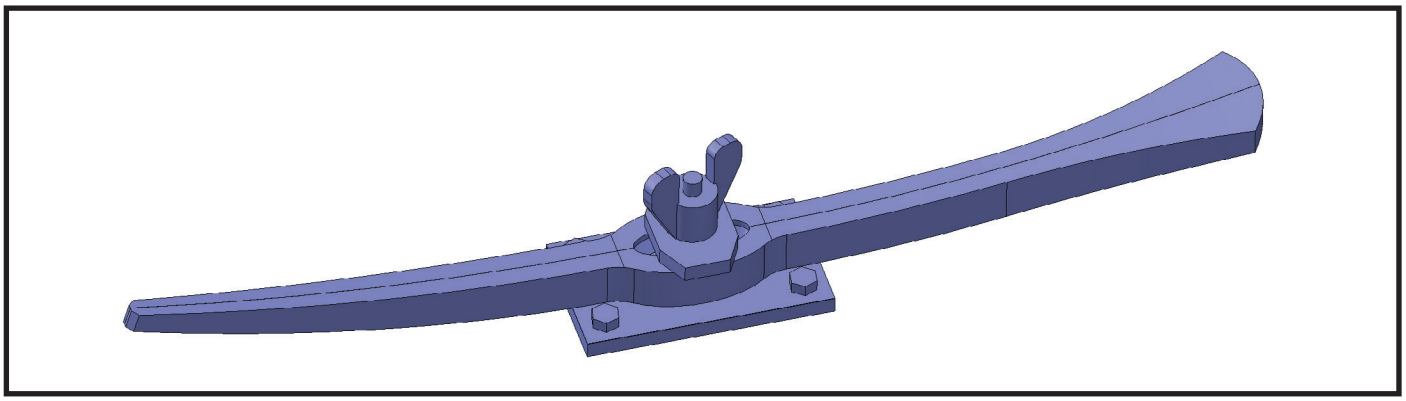

Glue parts 02-51A and 02-51B.
Then glue part 02-51C.

Assembly 02 - Upper Hull

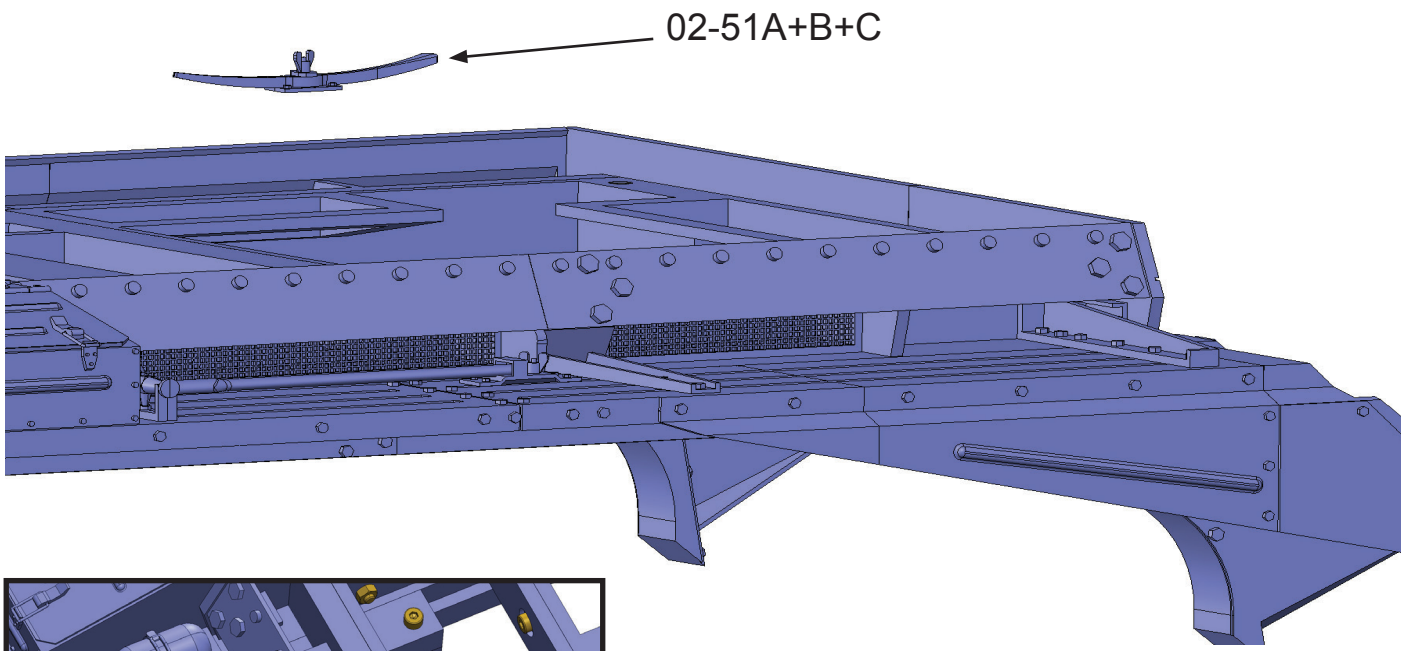

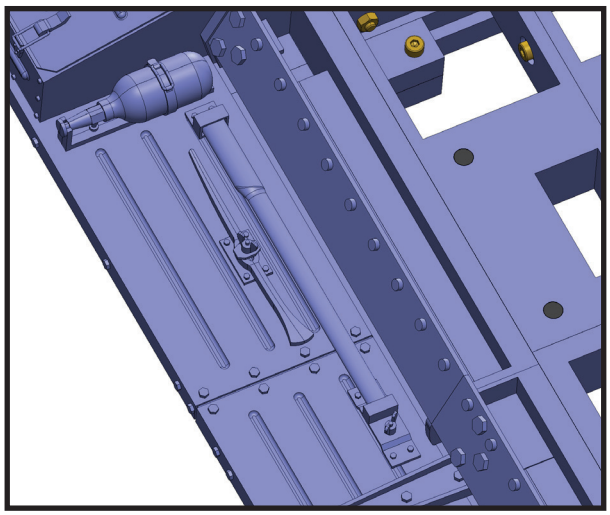

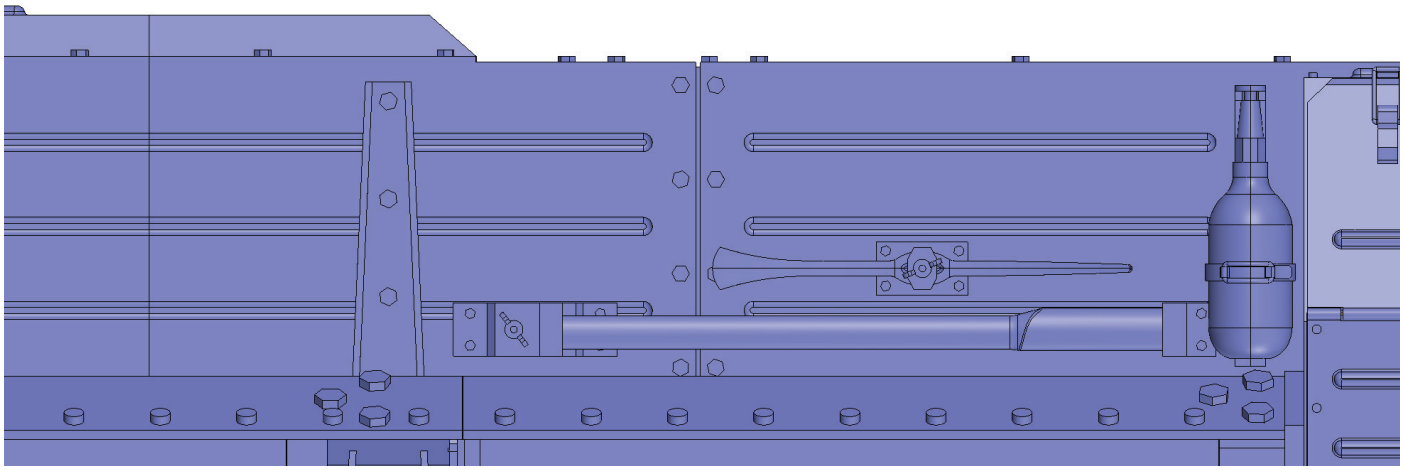

Glue the parts assemblies from 02-51A to 02-51C.

Assembly 02 - Upper Hull

2x

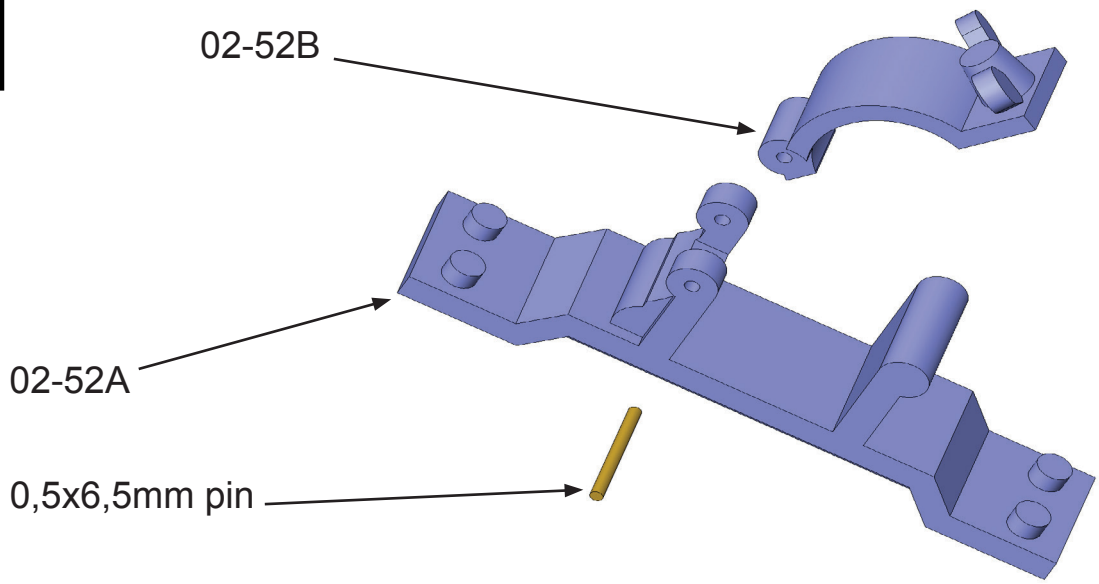

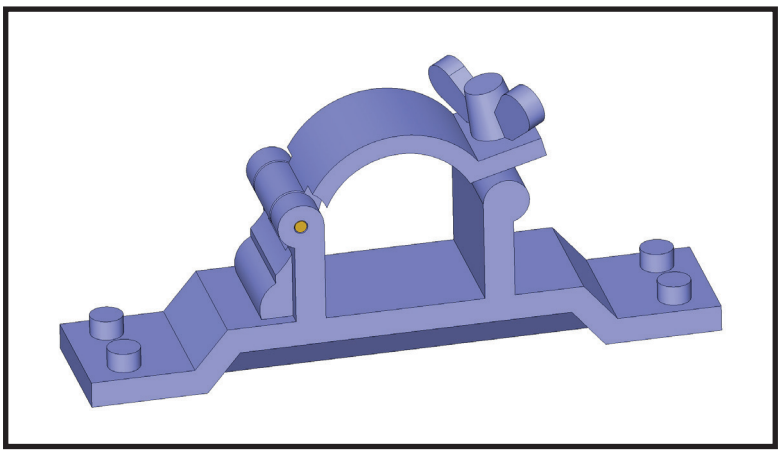

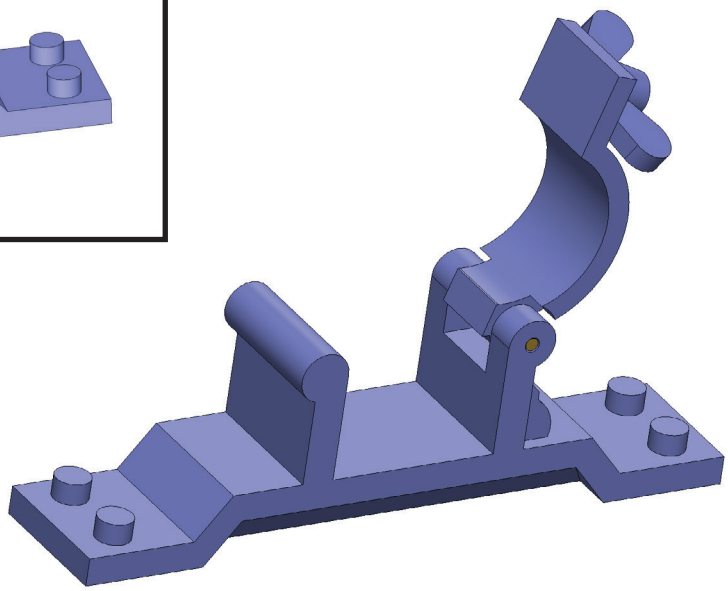

Connect parts 02-52A and 02-52B with a wire.
Part 02-52B must rotate freely.
Use a wire with a diameter of 0,5 mm. The length of the wire is 6,5 mm.
You will need two such assemblies.

Assembly 02 - Upper Hull

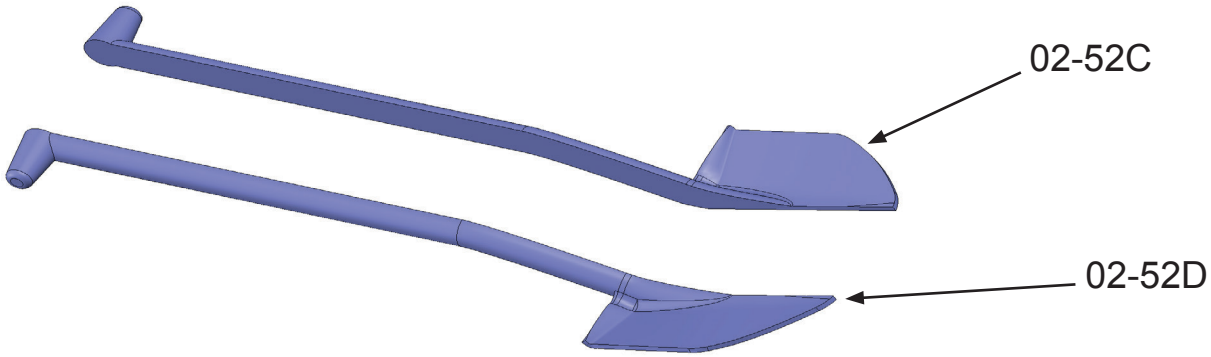

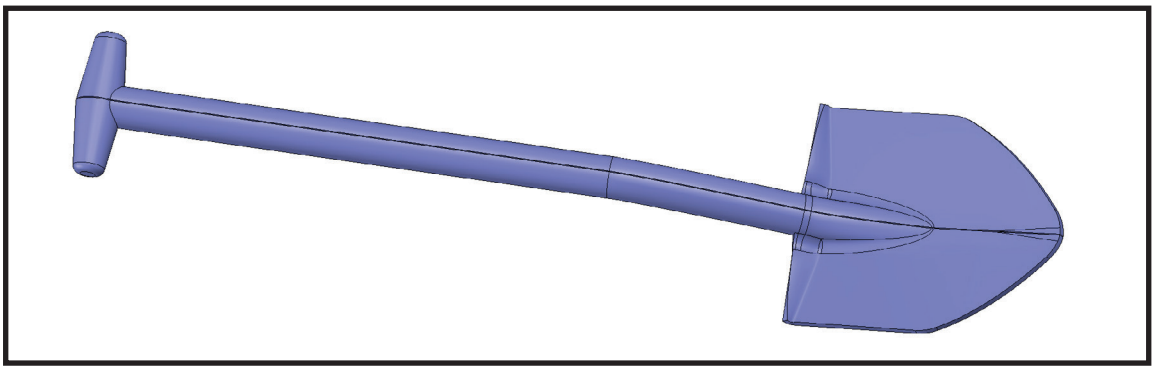

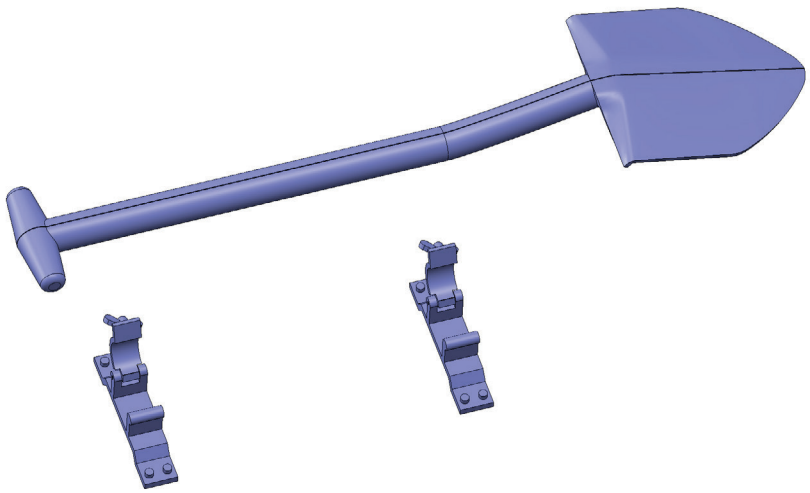

Glue parts 02-52C and 02-52D together.
Then add two assemblies 02-52A+B.

Assembly 02 - Upper Hull

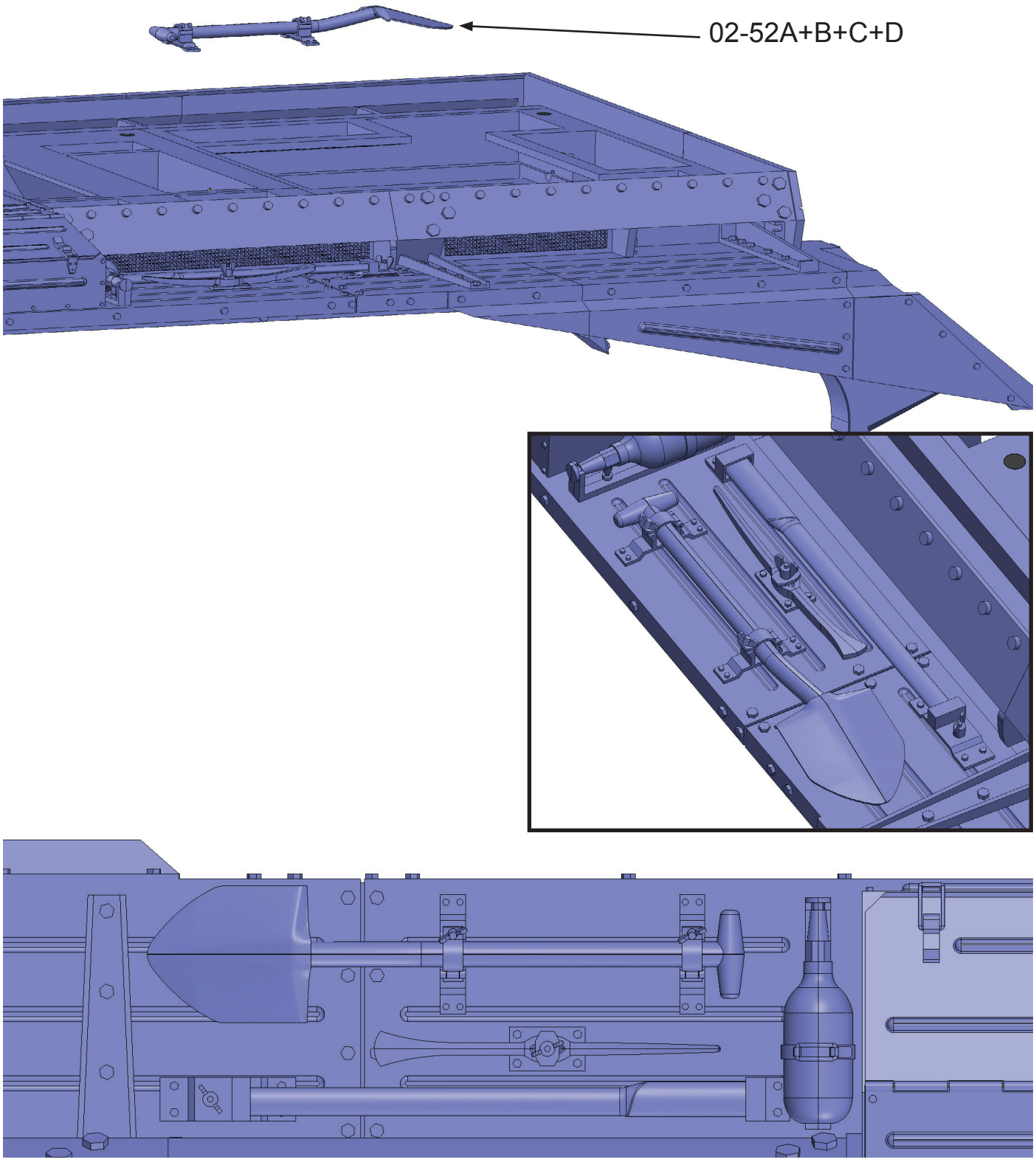

Glue the parts assemblies from 02-52A to 02-52D.

Assembly 02 - Upper Hull

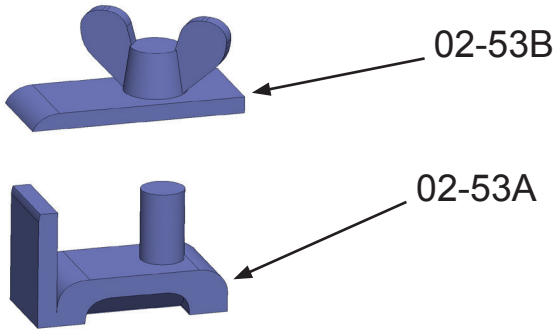

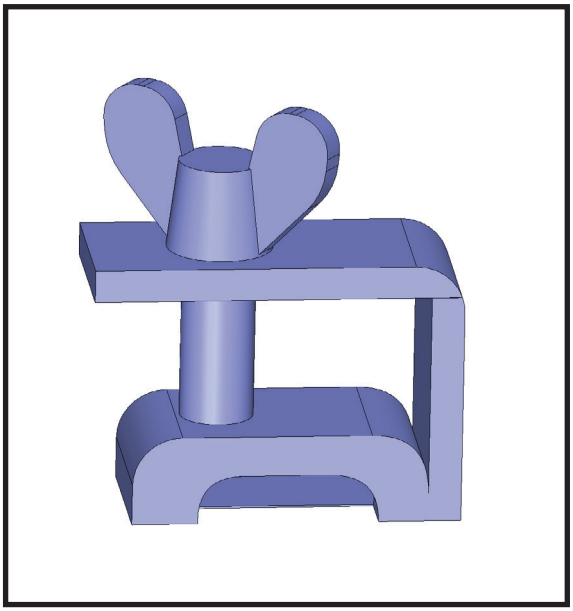

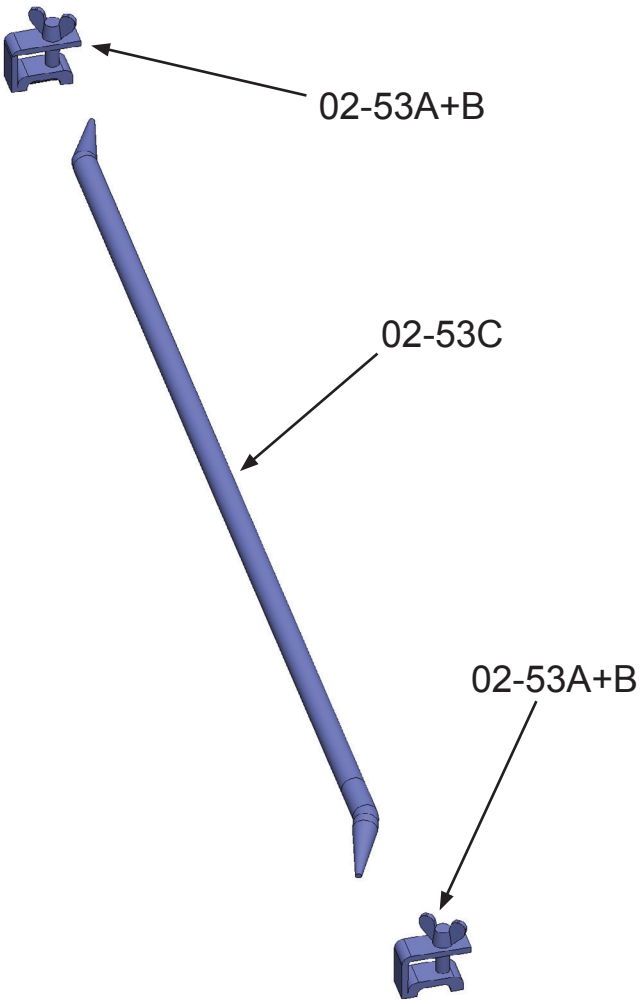

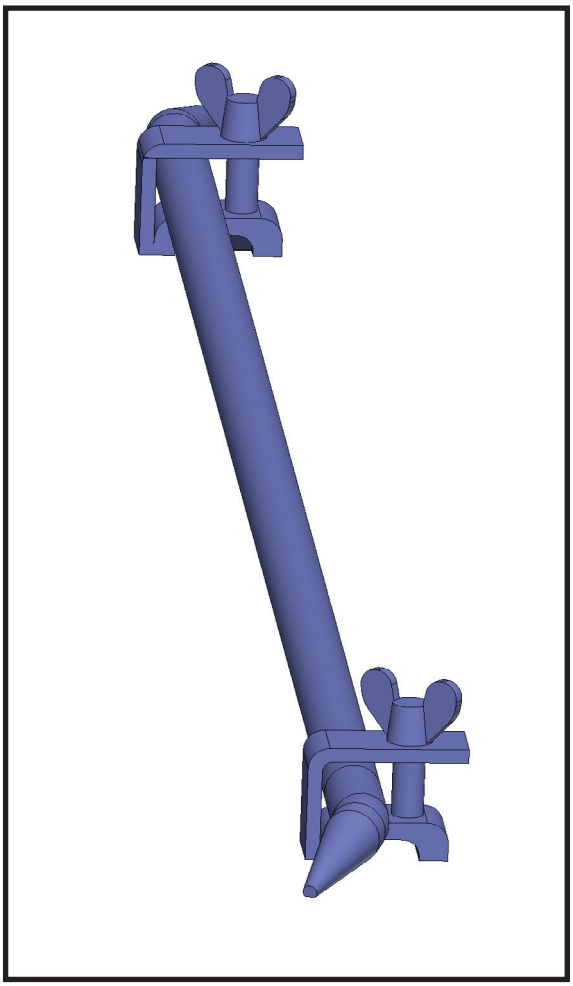

Glue parts 02-53A and 02-53B. You will need two such units.
Slide the units onto part 02-53C.

Assembly 02 - Upper Hull

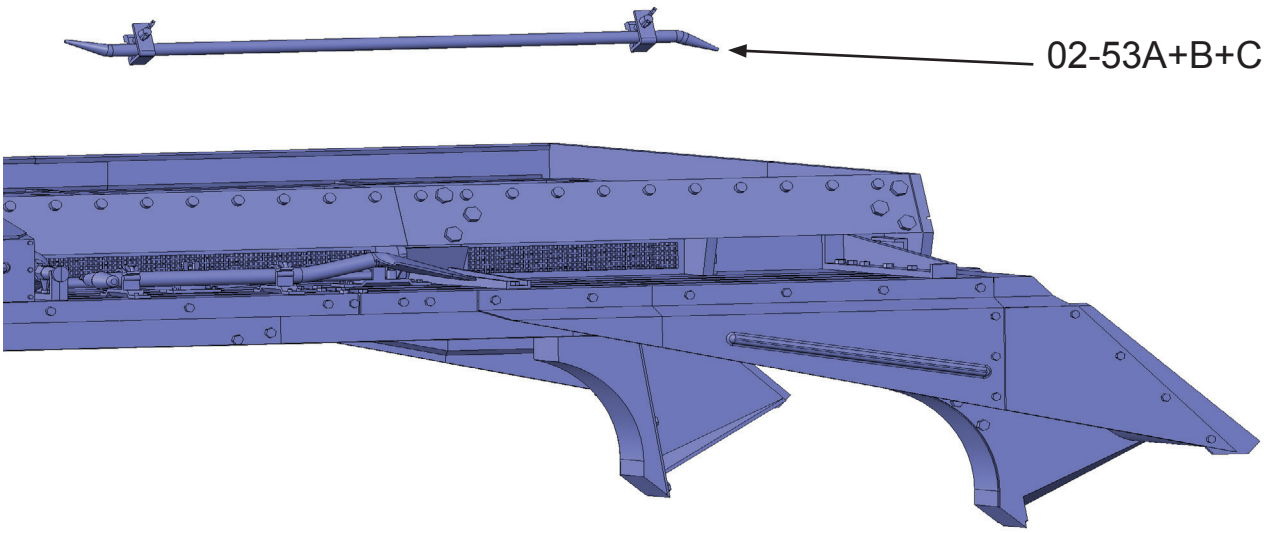

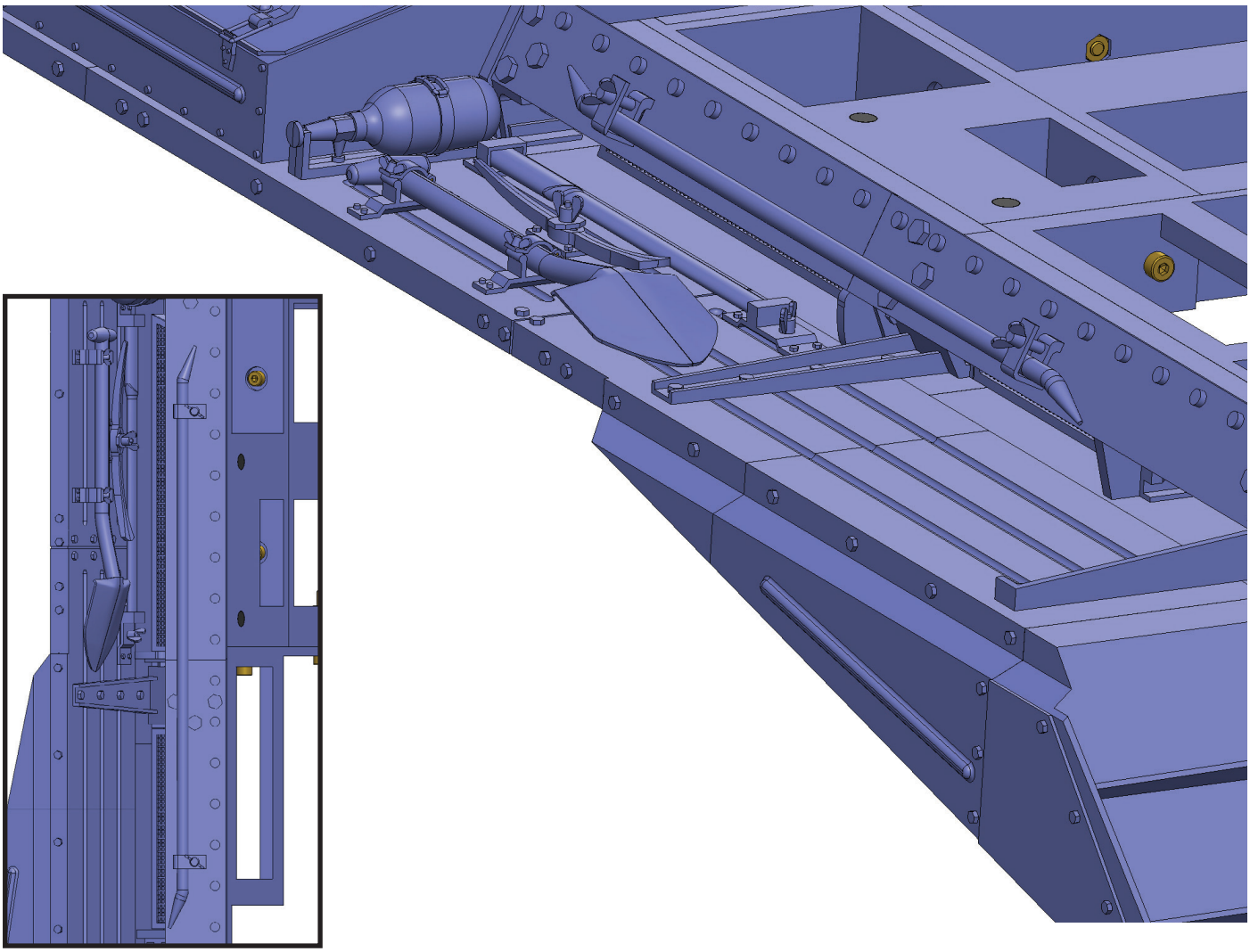

Glue the parts assemblies from 02-53A to 02-53C.

Assembly 02 - Upper Hull

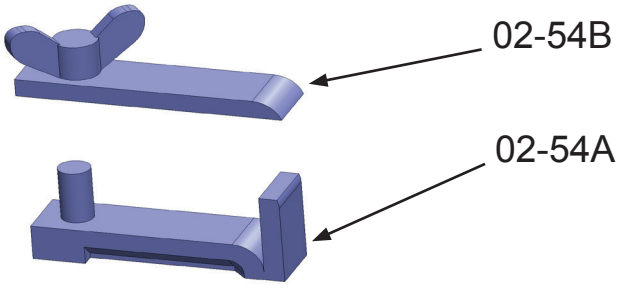

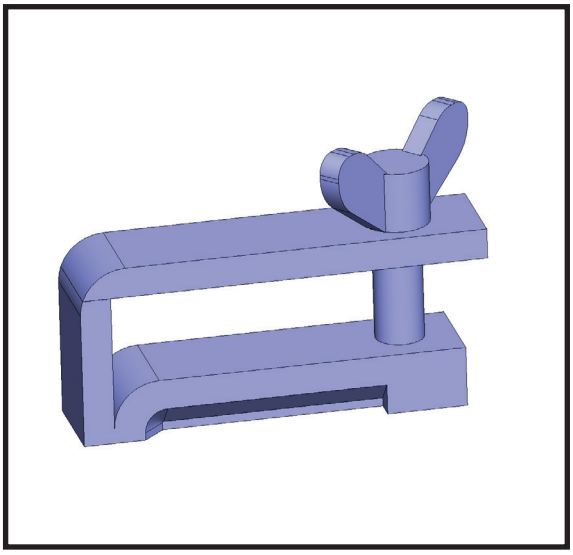

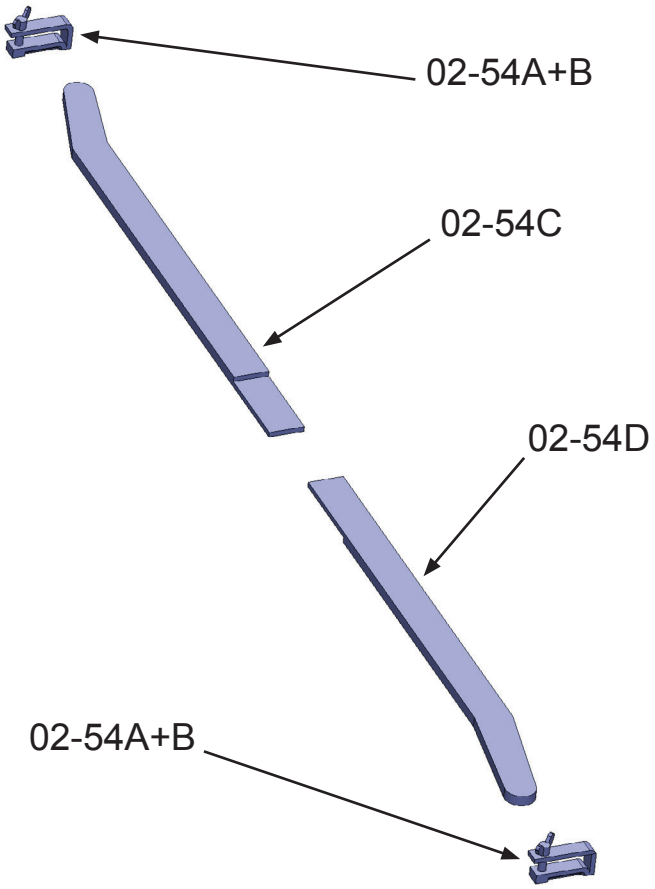

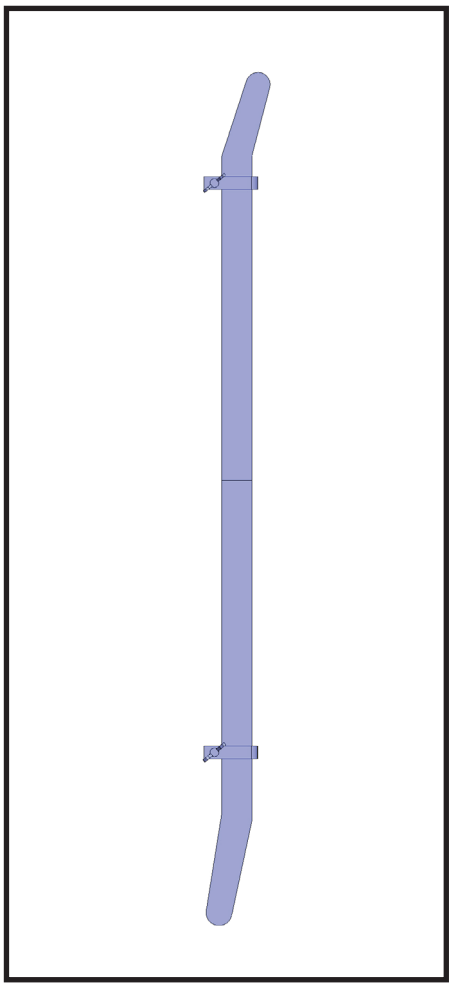

Glue parts 02-54A and 02-54B together. You will need two such units.
Glue parts 02-54C and 02-54D. Slide the parts 02-54C+D onto parts 02-54A+B.
IF YOU HAVE BIG PRINTER, USE PART 02-54CD.

Assembly 02 - Upper Hull

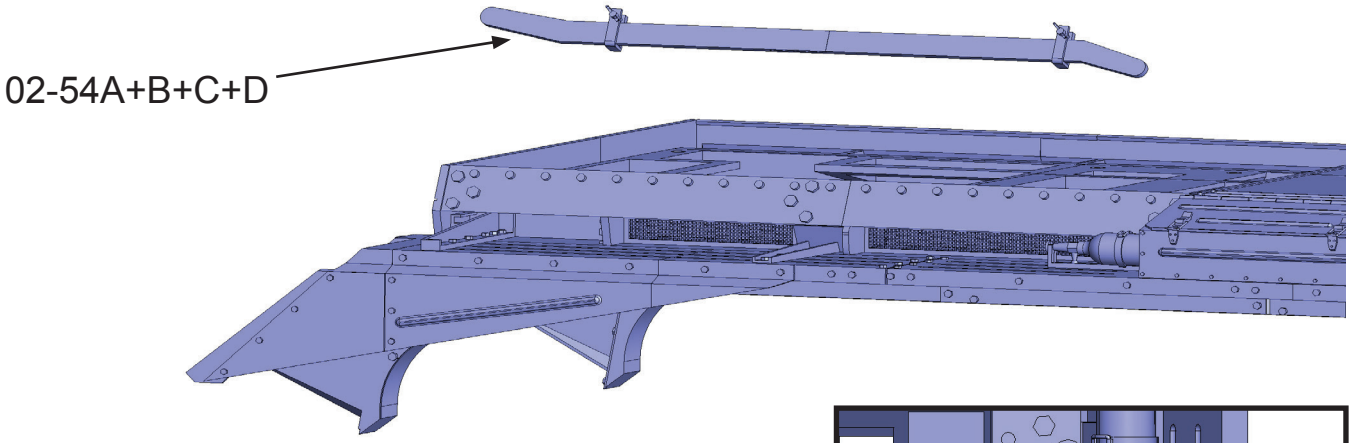

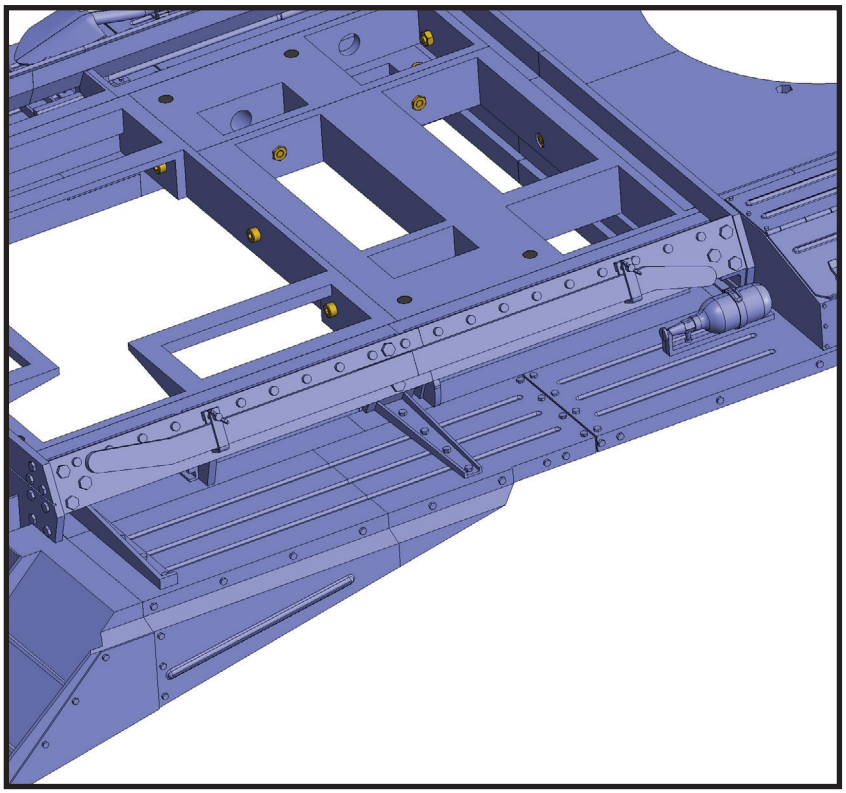

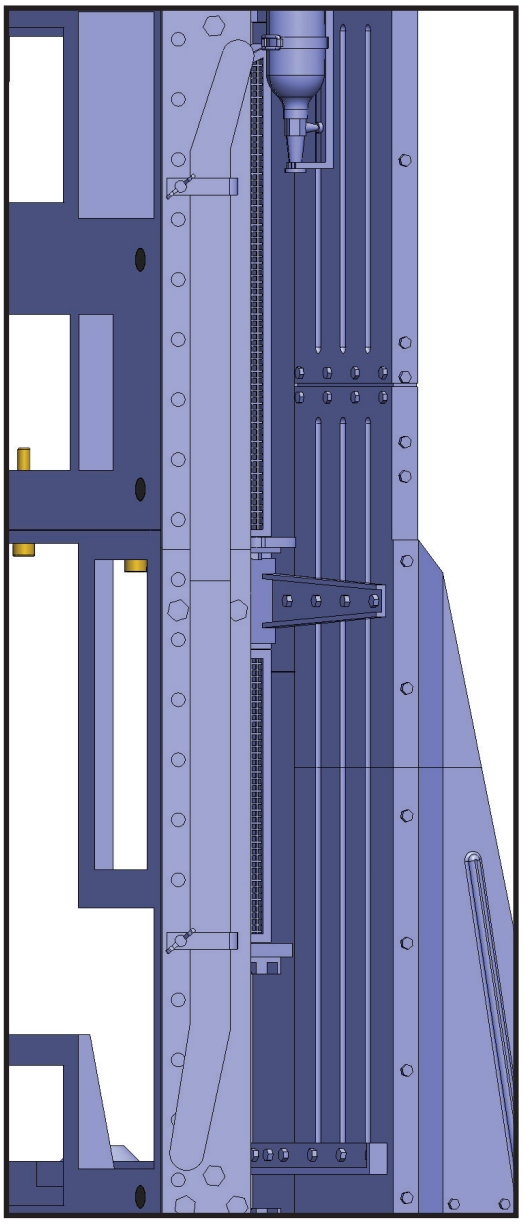

Glue the parts assemblies from 02-54A to 02-54D.

Assembly 02 - Upper Hull

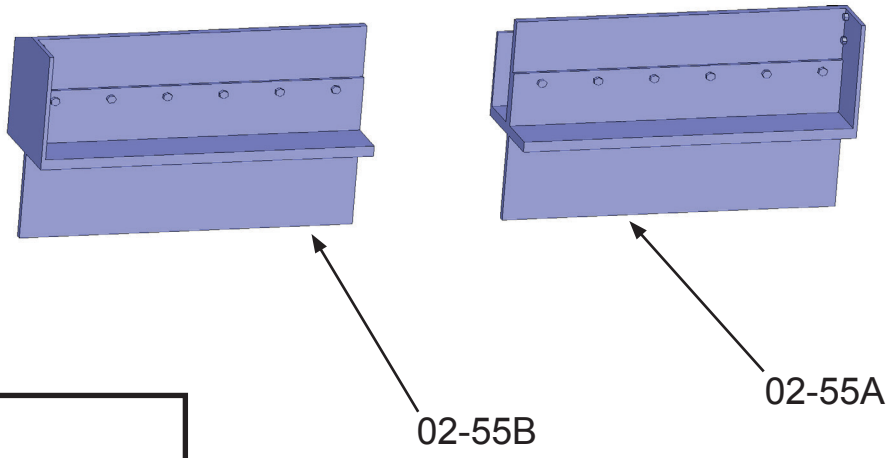

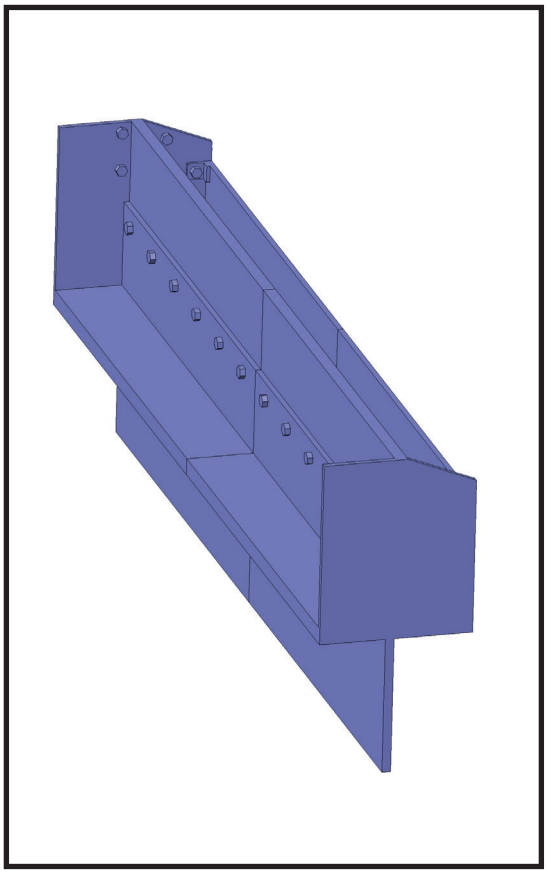

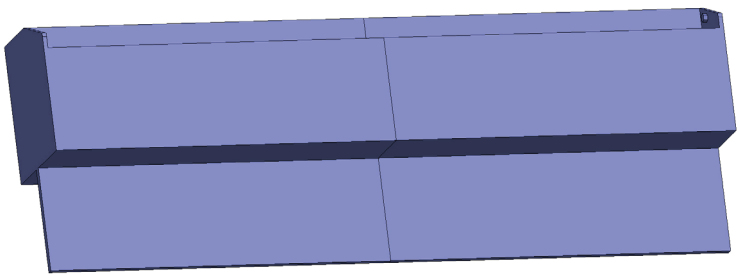

Glue parts 02-55A and 02-55B together.

Assembly 02 - Upper Hull

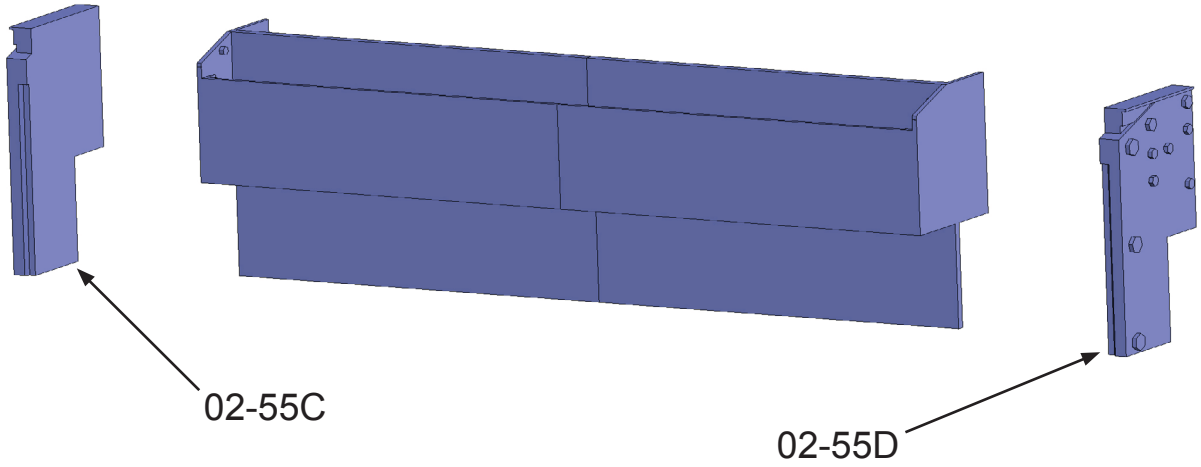

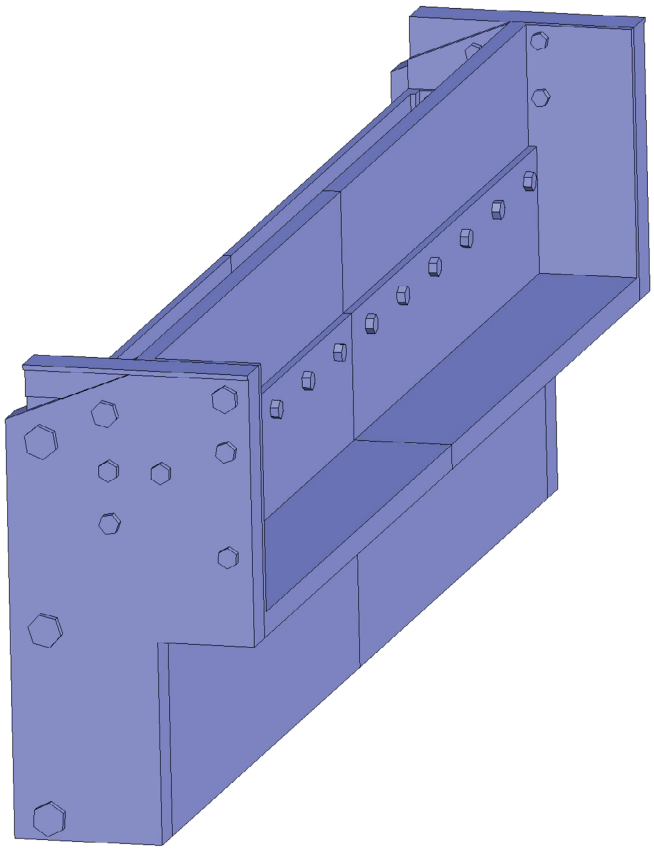

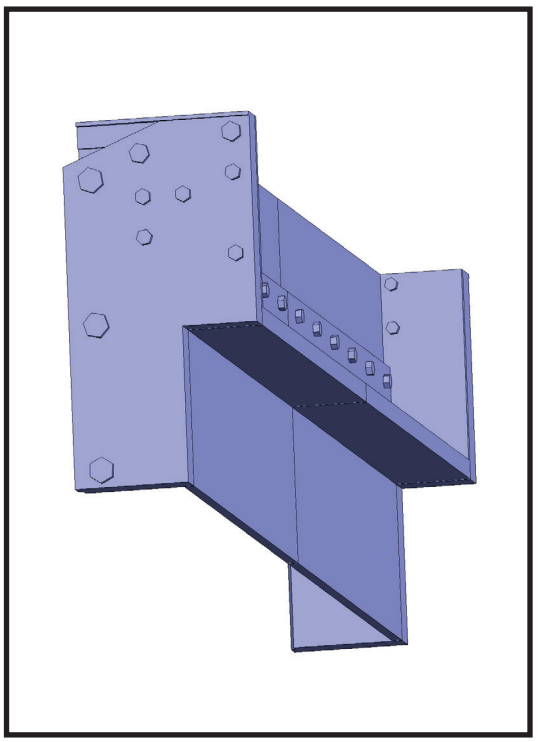

Glue parts 02-55C and 02-55D.

Assembly 02 - Upper Hull

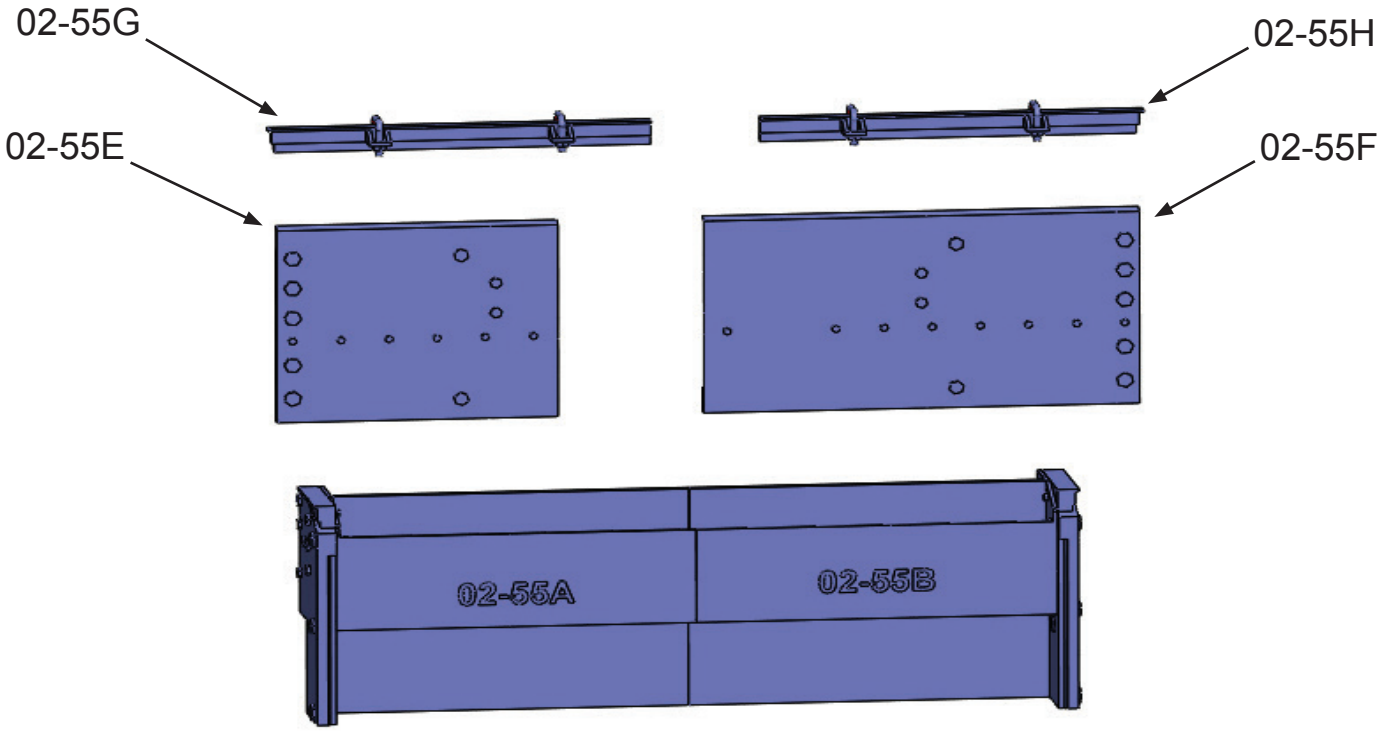

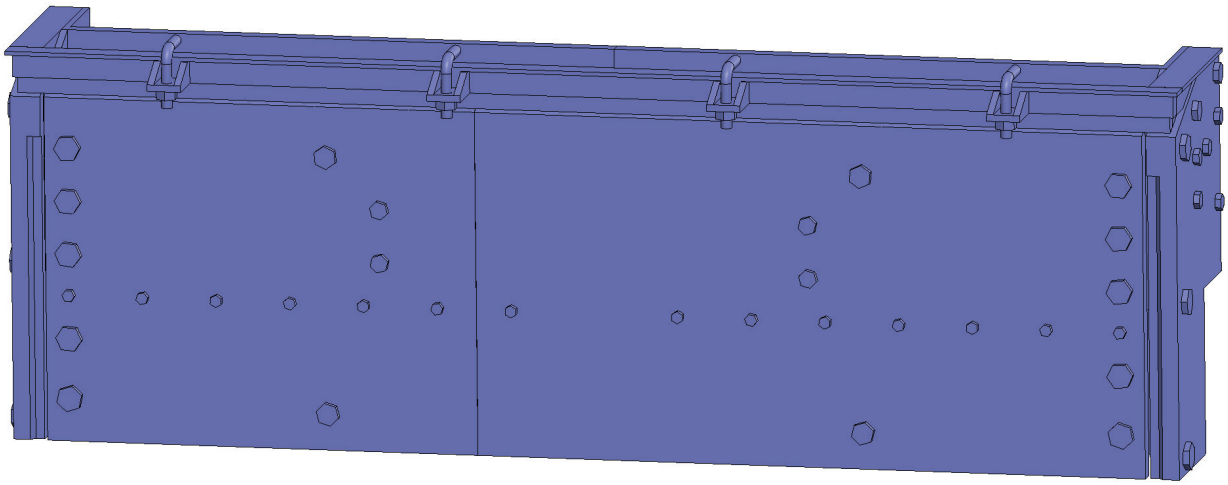

Glue parts 02-55E, 02-55F, 02-55G and 02-55H.
IF YOU HAVE BIG PRINTER, USE PART 02-55EF and 02-55GH.

Assembly 02 - Upper Hull

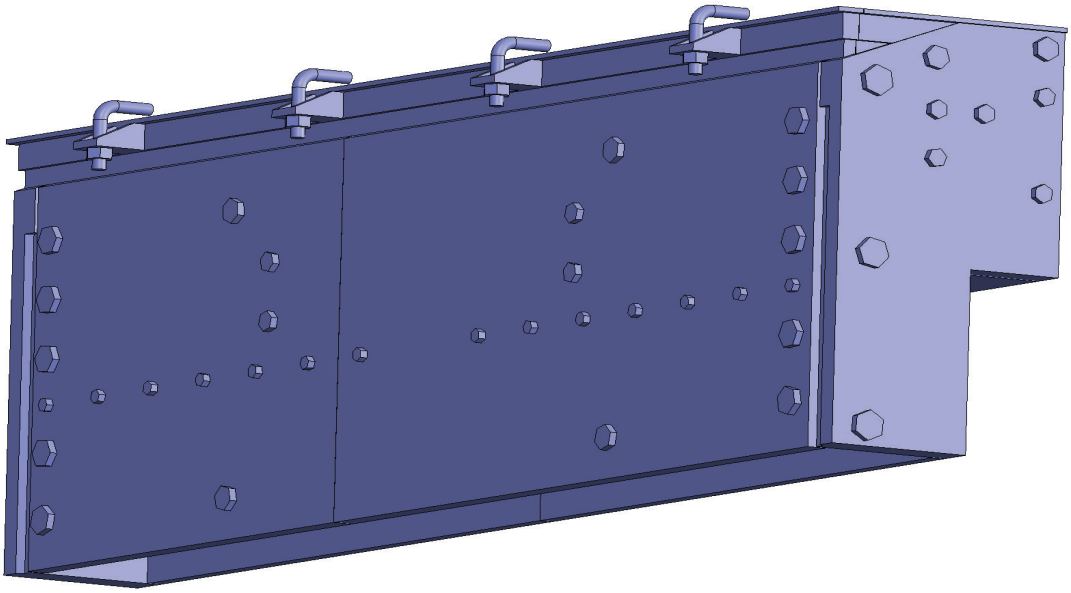

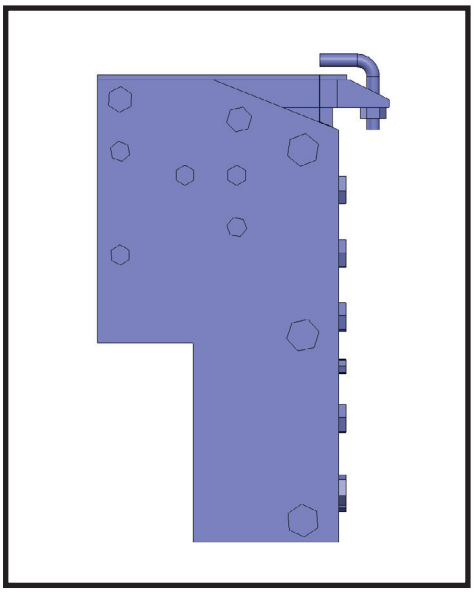

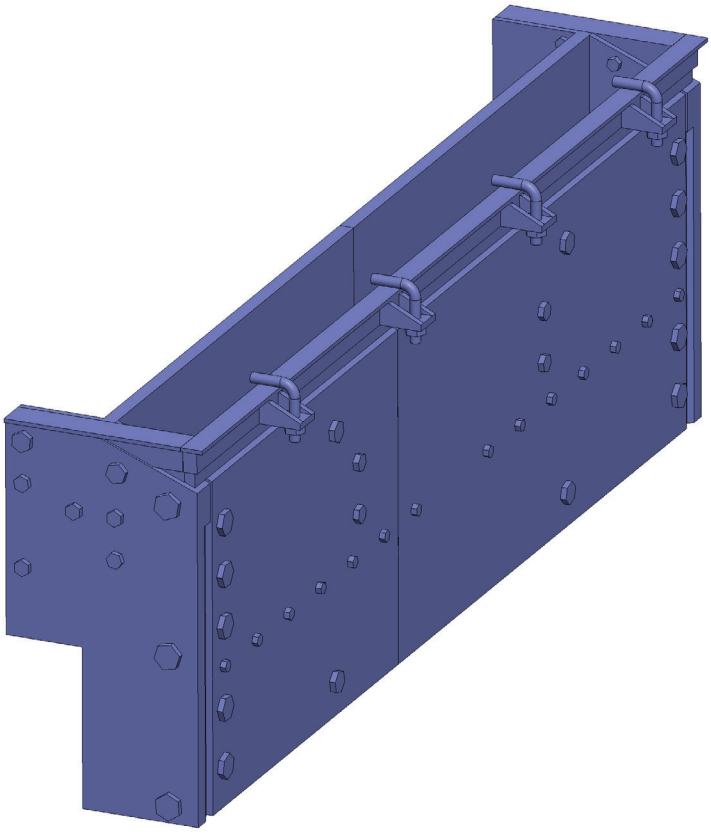

Correct position of parts 02-55A to 02-55H.

Assembly 02 - Upper Hull

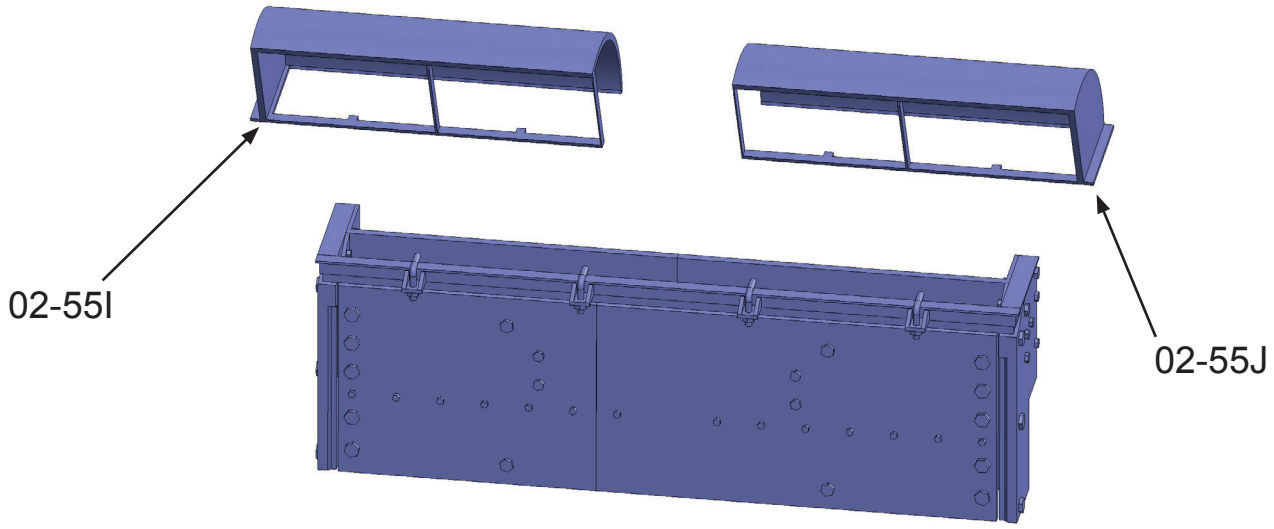

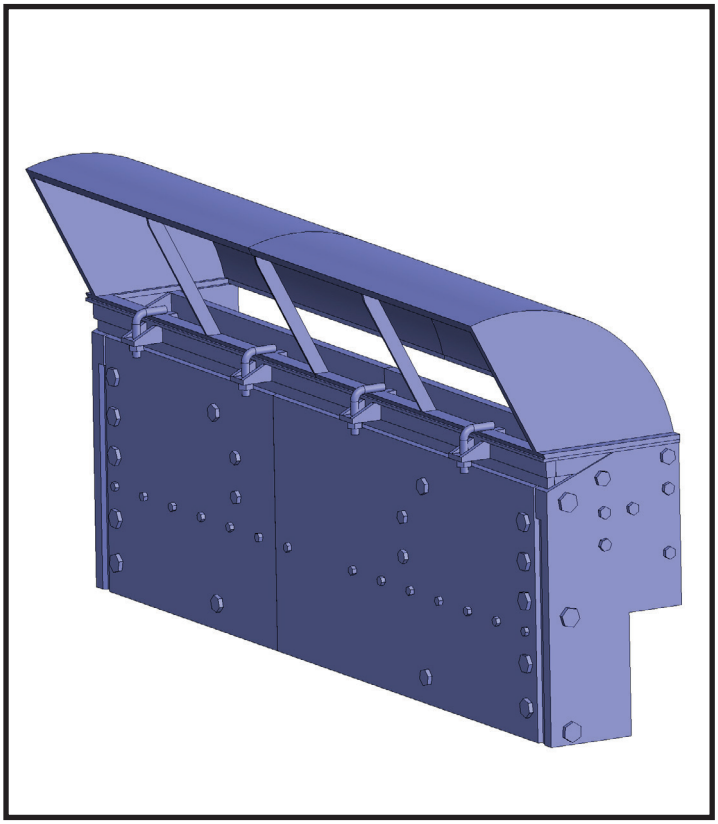

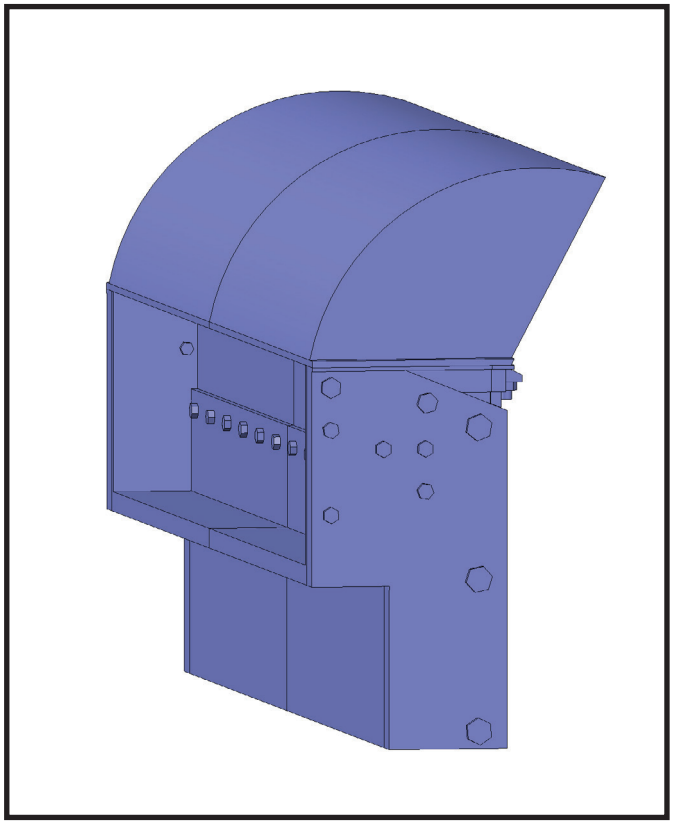

Glue parts 02-55I and 02-55J.
If you are interested in another version of the exhaust, see file 02-55IJ_alt.

Assembly 02 - Upper Hull

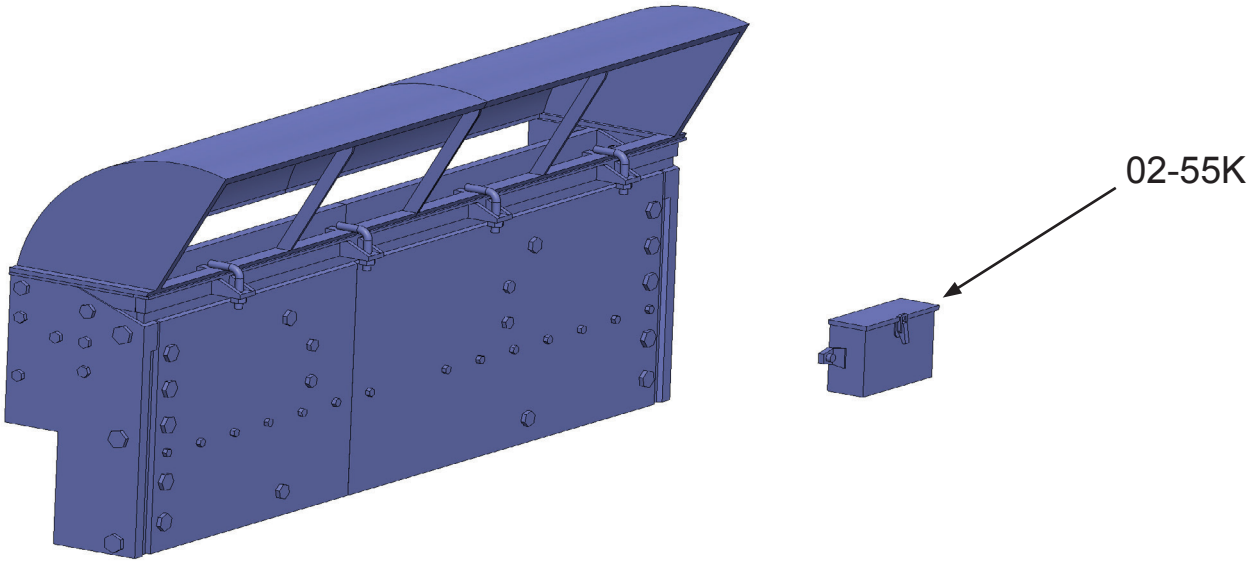

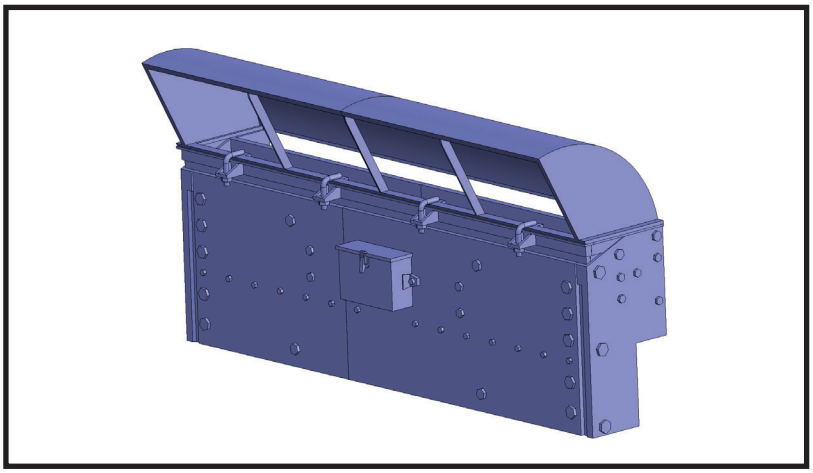

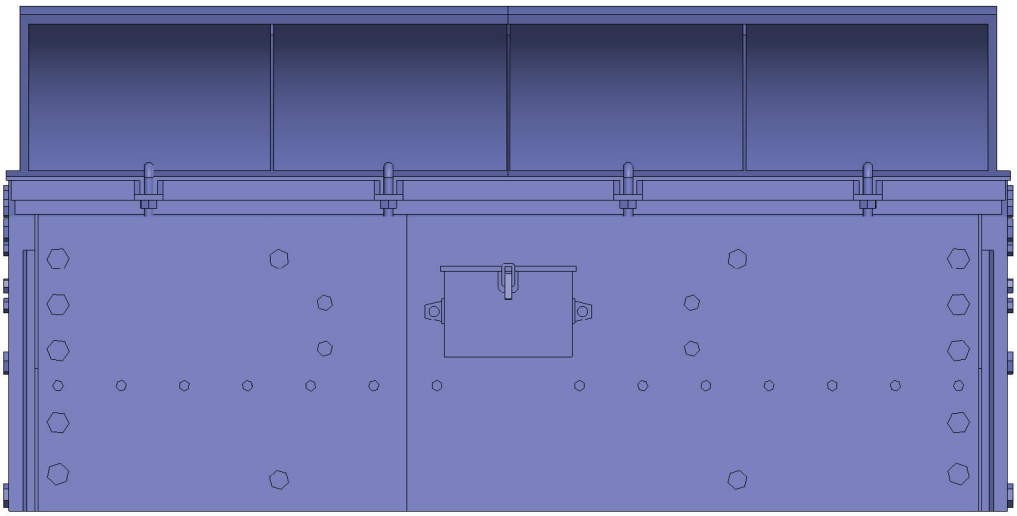

Glue part 02-55K.

Assembly 02 - Upper Hull

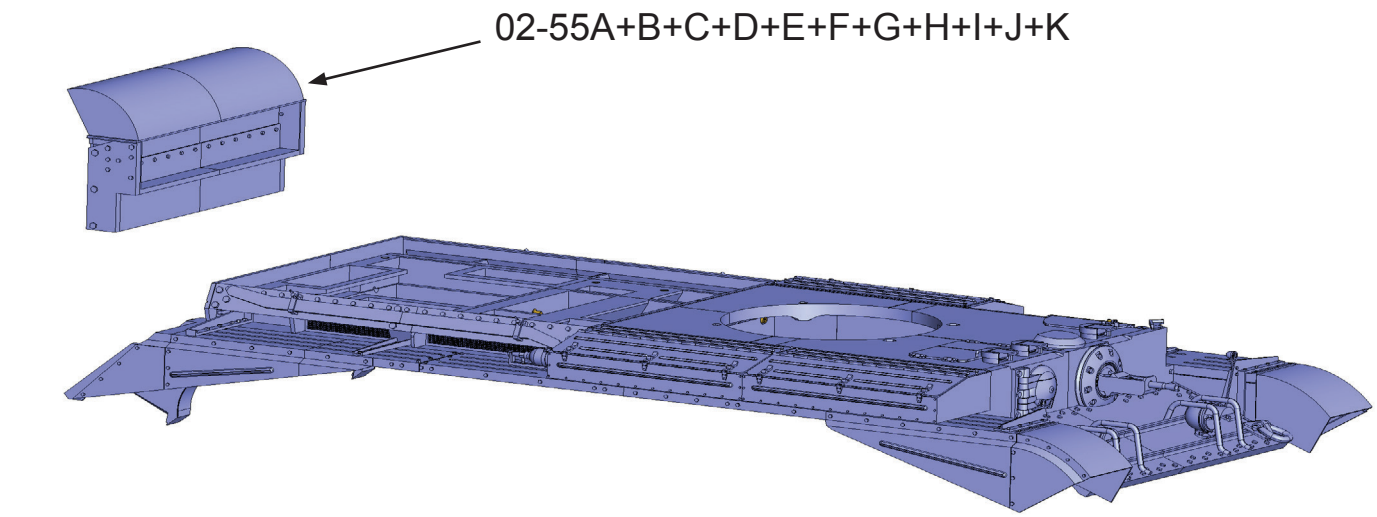

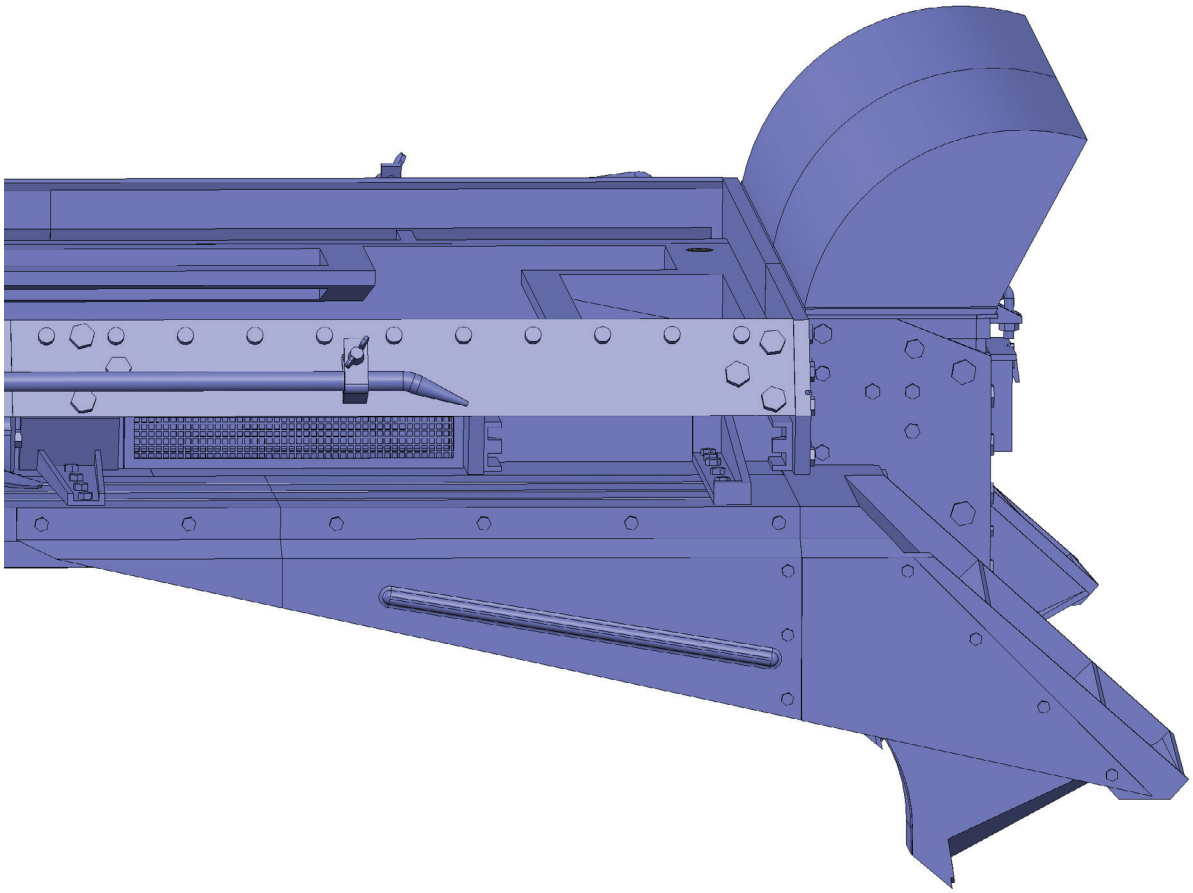

Glue the parts assemblies from 02-55A to 02-55K.

Assembly 02 - Upper Hull

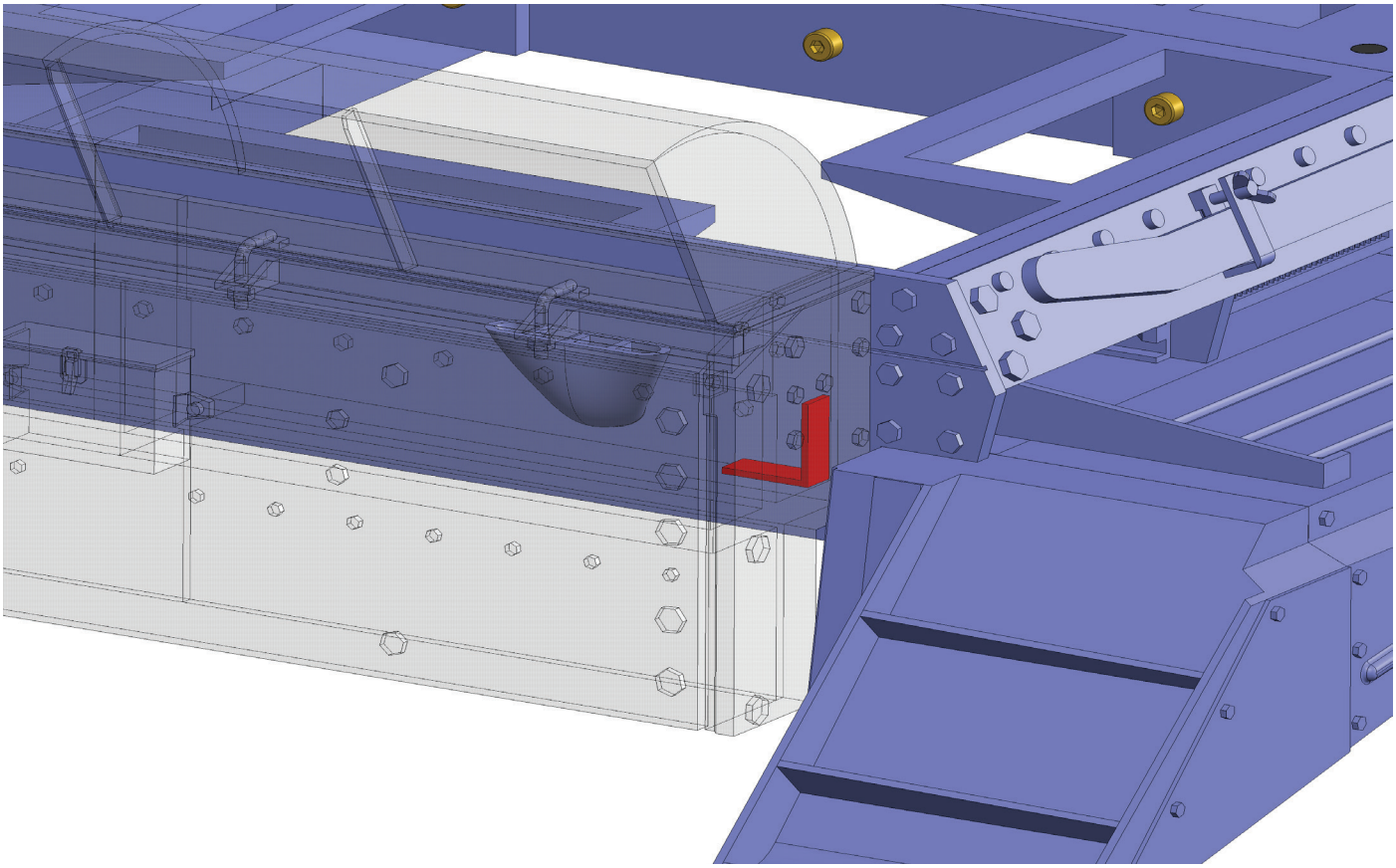

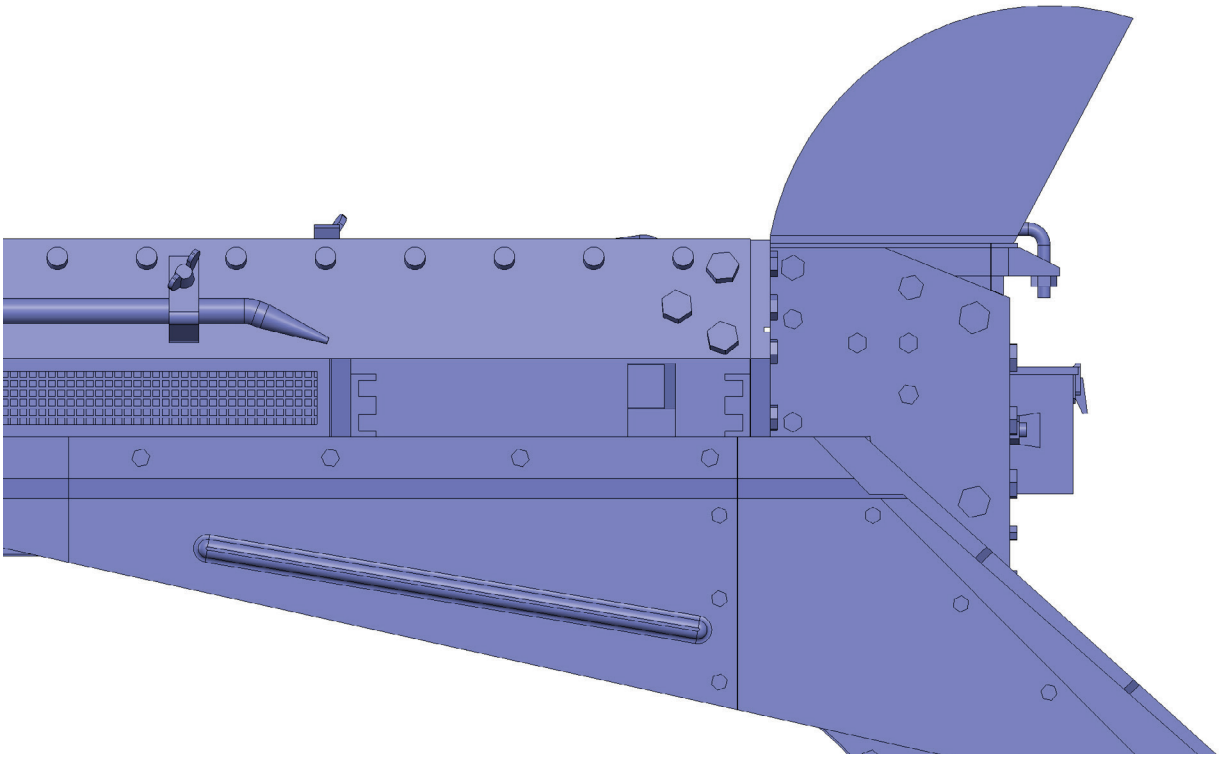

Correct position of the parts assemblies 02-55A to 02-55K.
Areas marked in red are used for precise fitting of parts.

Assembly 02 - Upper Hull

Assembly 02 - Upper Hull

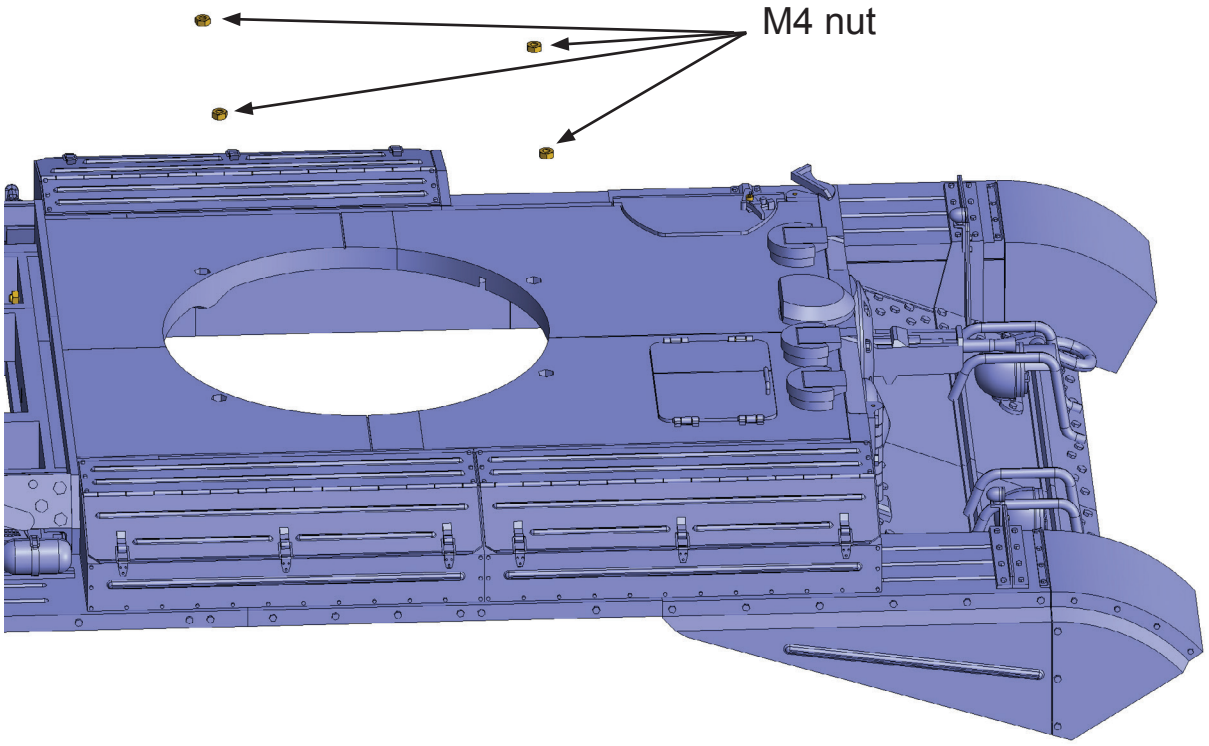

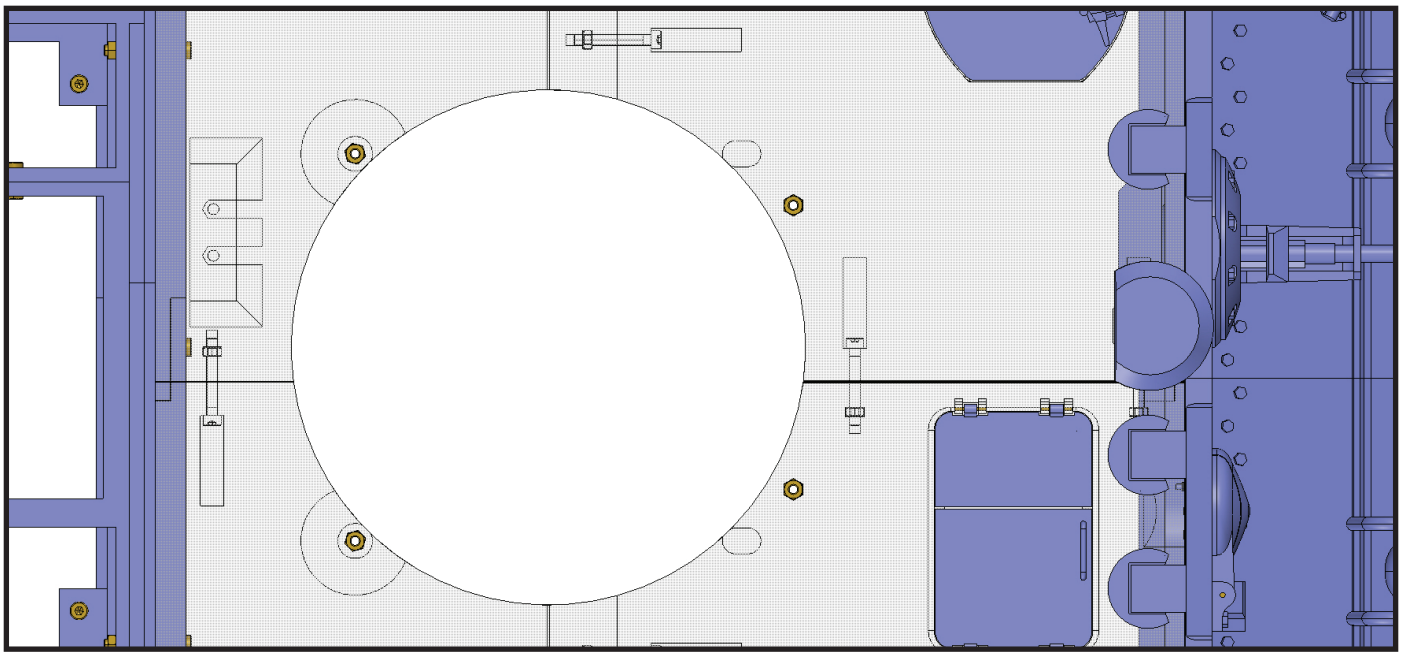

Insert 4 M4 nuts into parts 02-35 and 02-36.

Assembly 02 - Upper Hull

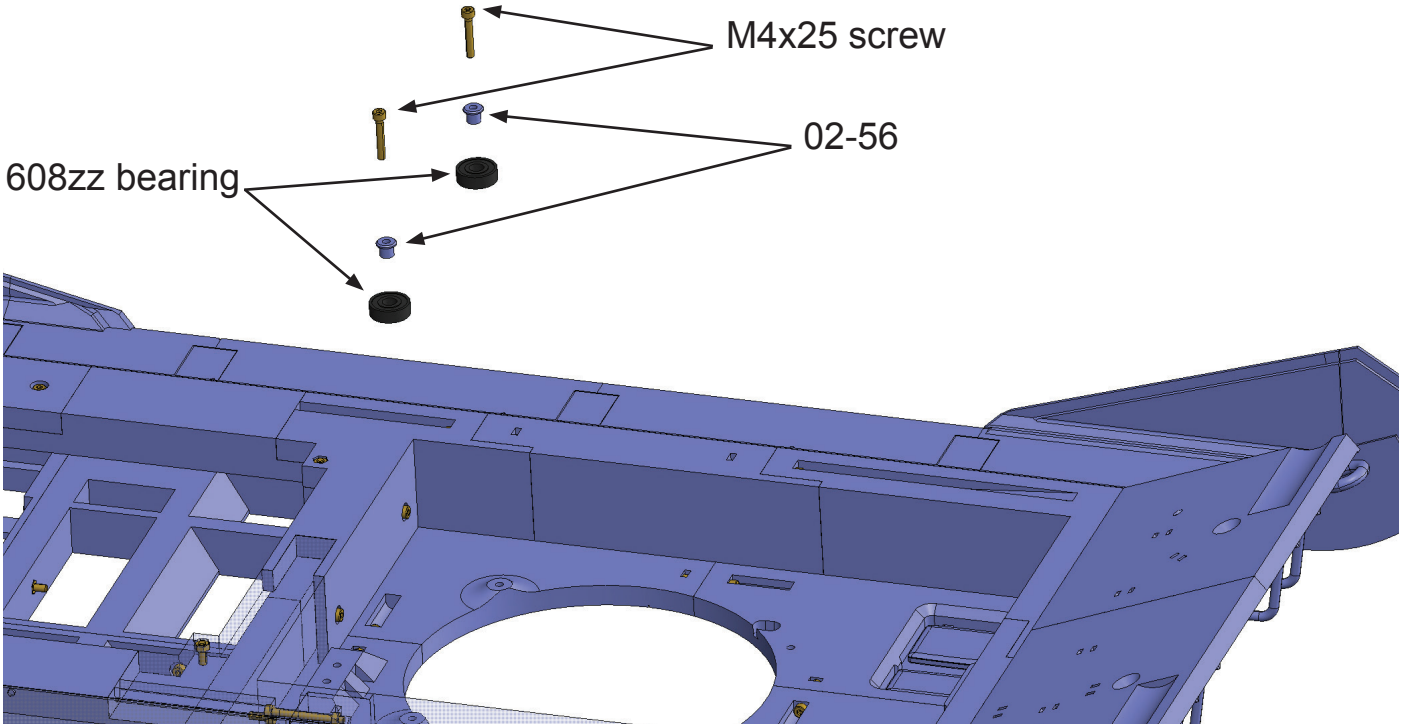

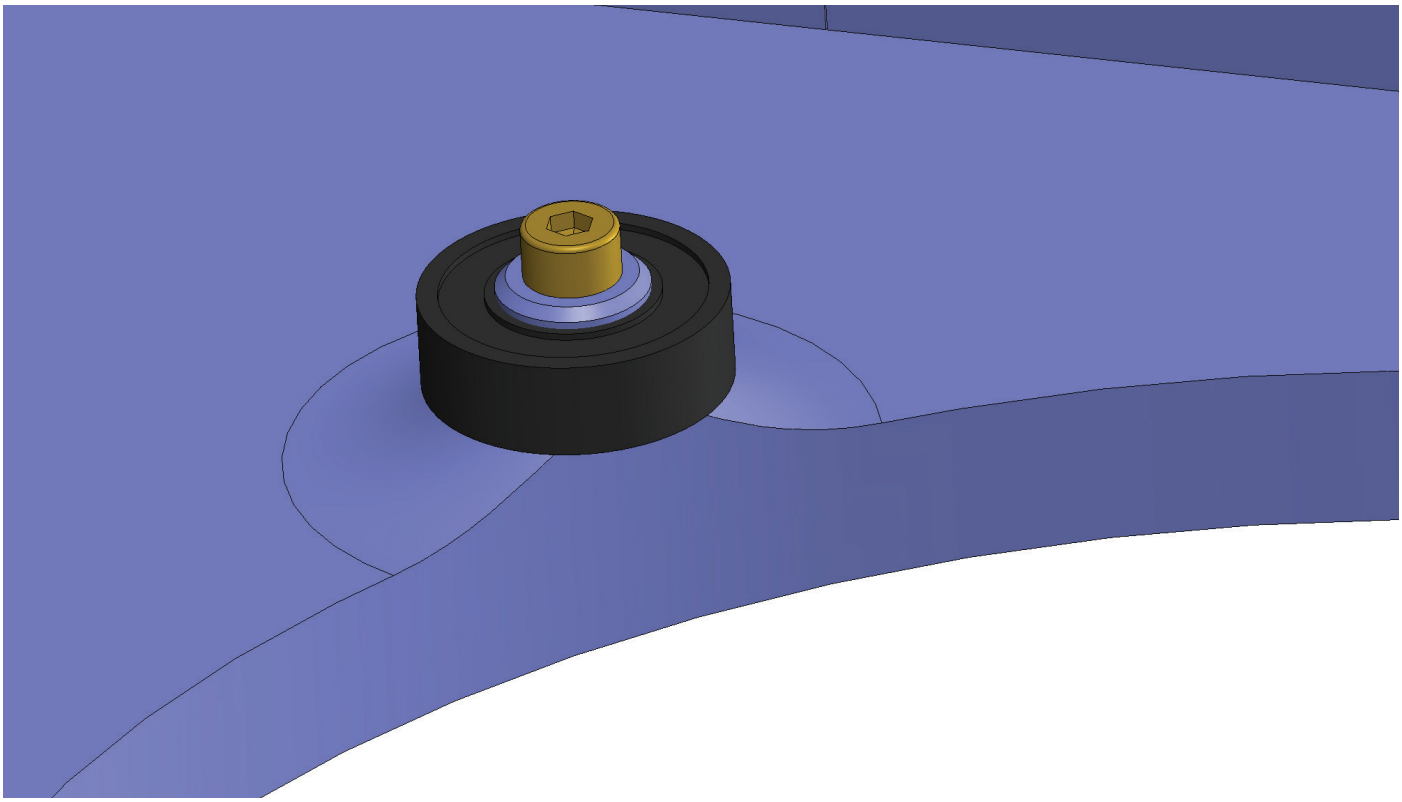

Attach two bearings type 608zz. Use M4x25 screws and parts 02-56.

Assembly 02 - Upper Hull

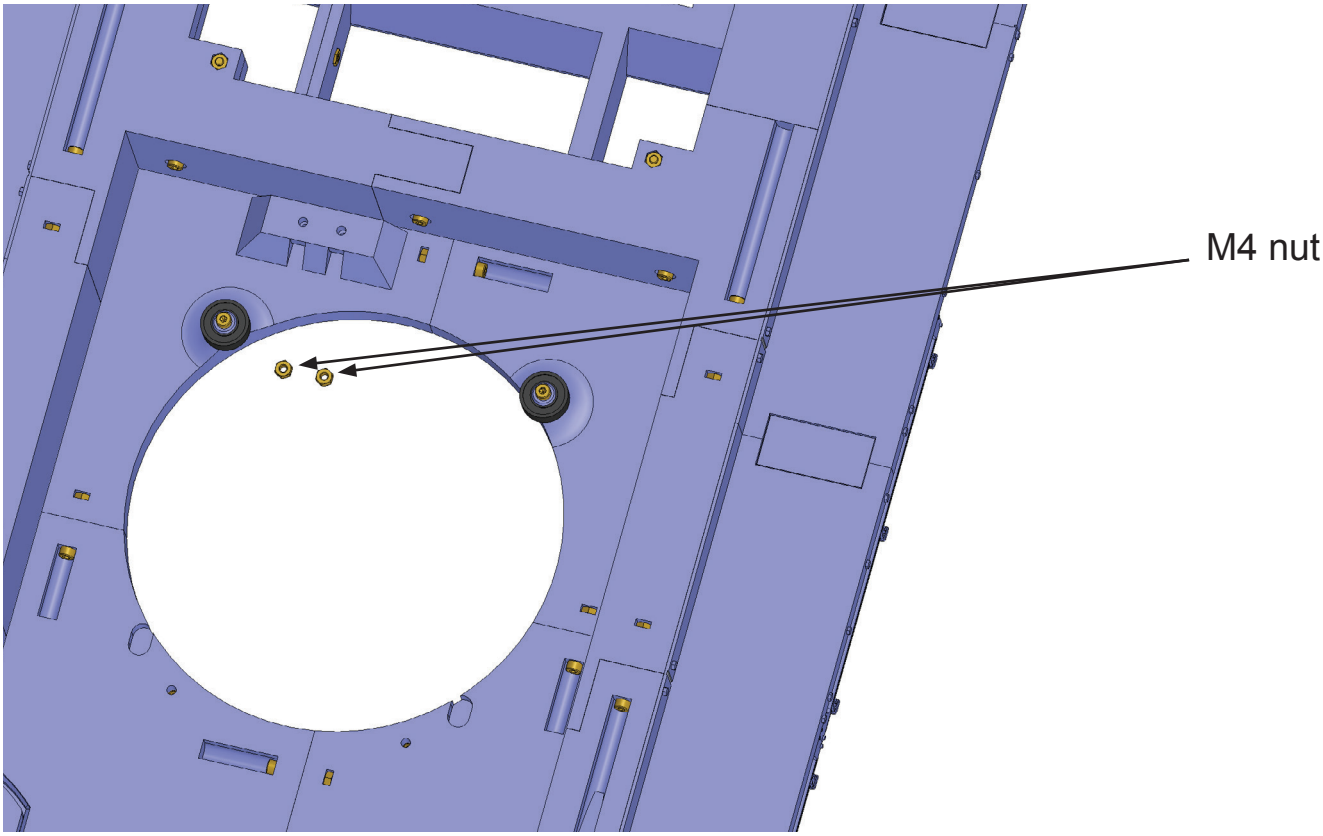

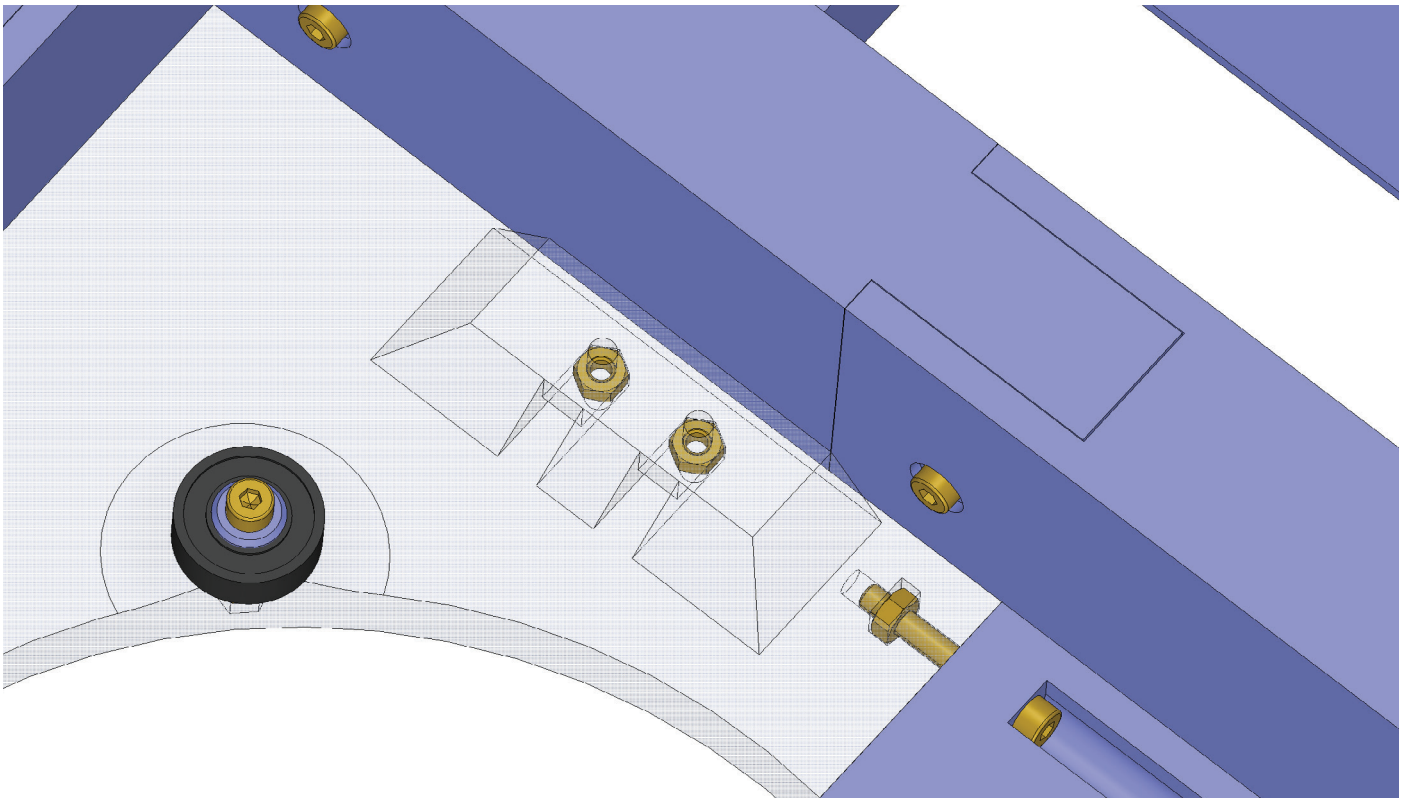

Insert two M4 nuts into part 02-36A.

Assembly 02 - Upper Hull

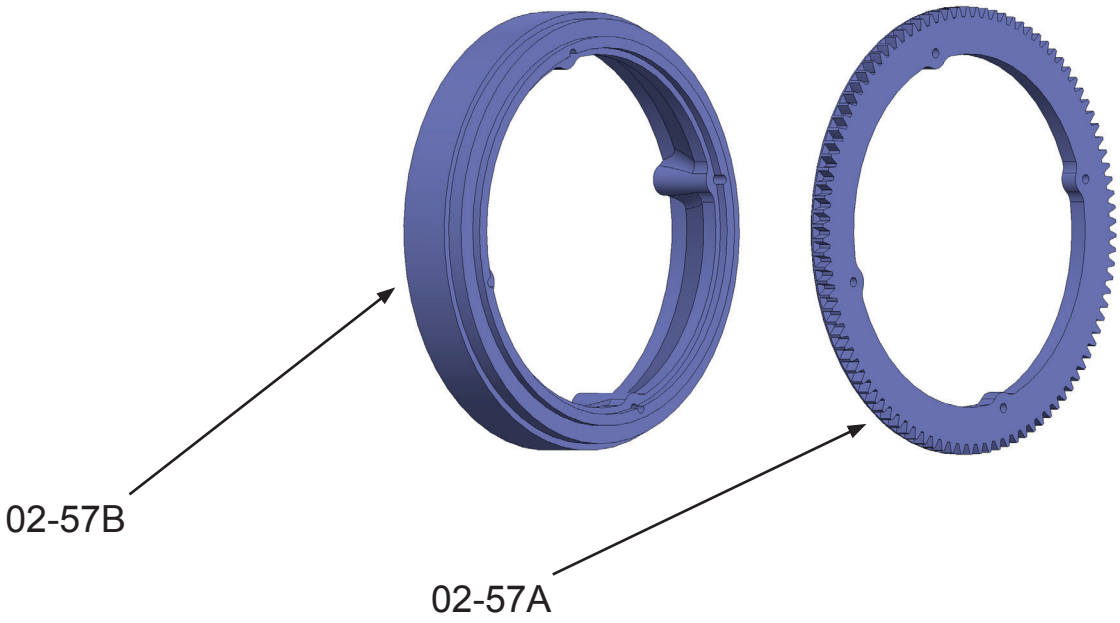

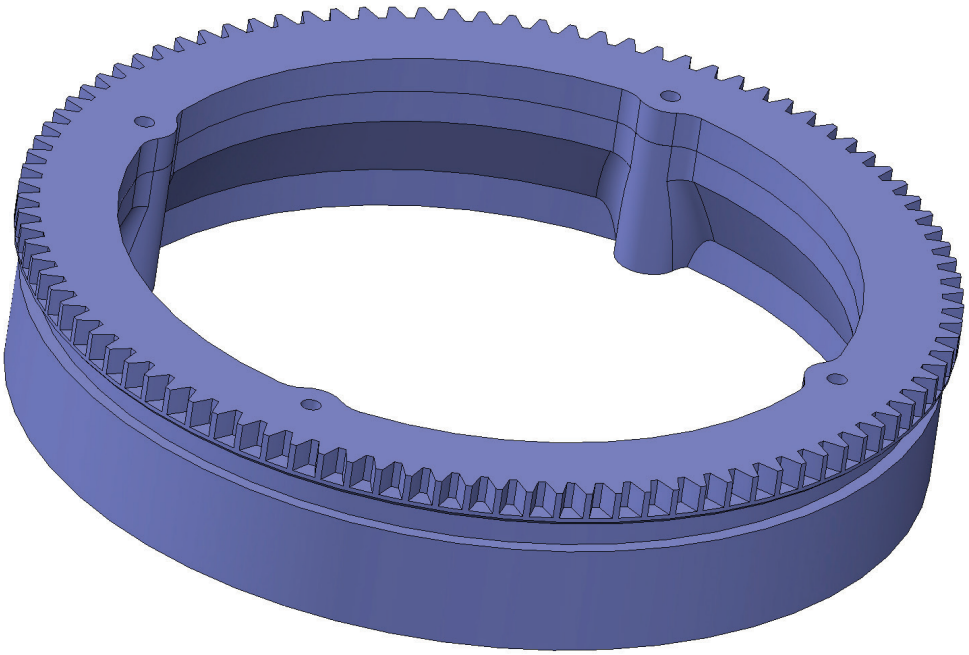

Prepare a rotating ring.
Attach parts 02-57A and 02-57B.

Assembly 02 - Upper Hull

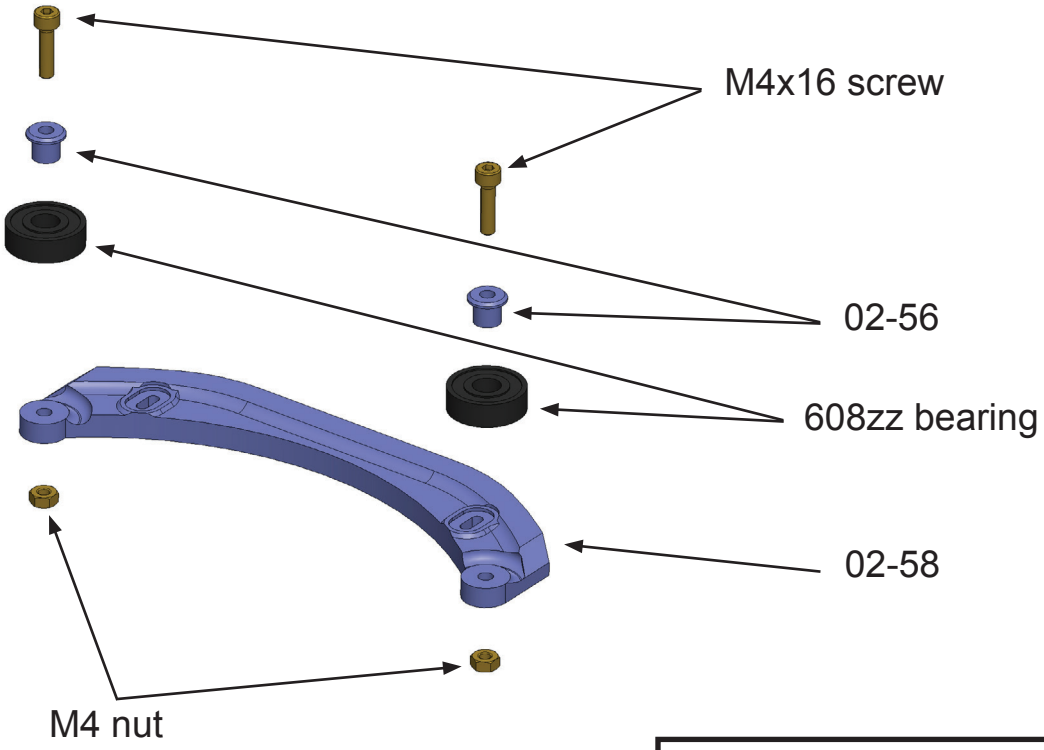

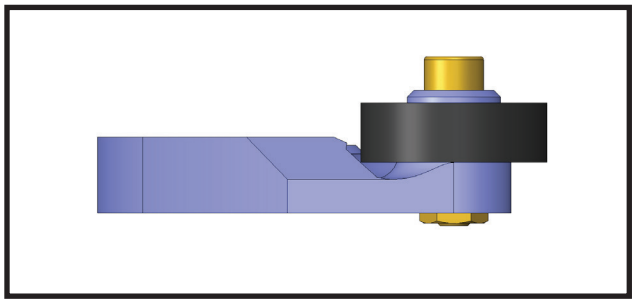

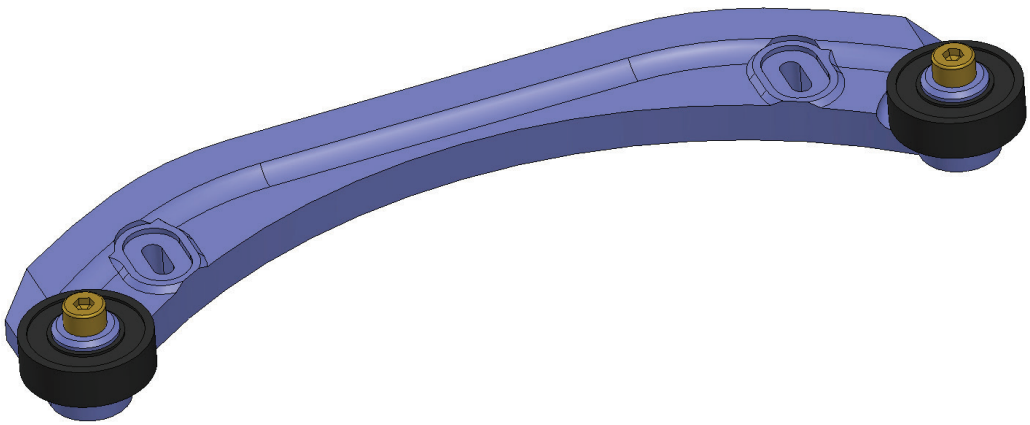

Attach two bearings type 608zz to part 02-58.
Use M4x16 screws and parts 02-56.
Secure with a pair of M4 nuts.

Assembly 02 - Upper Hull

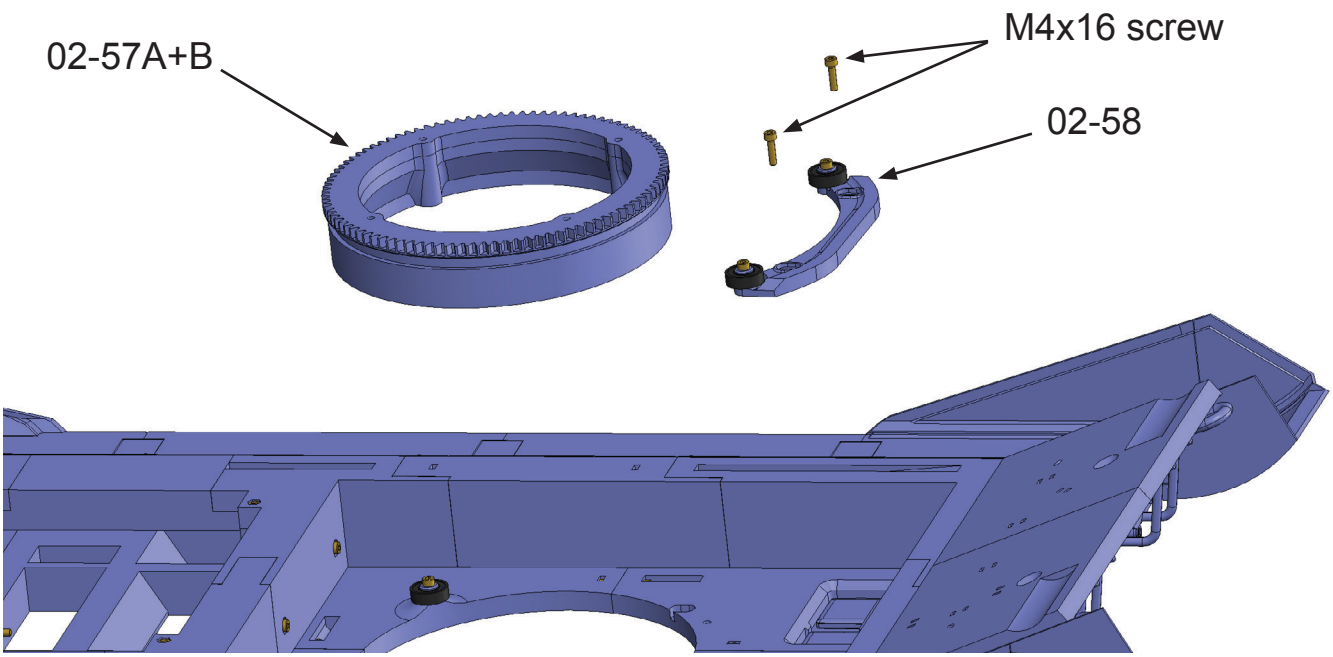

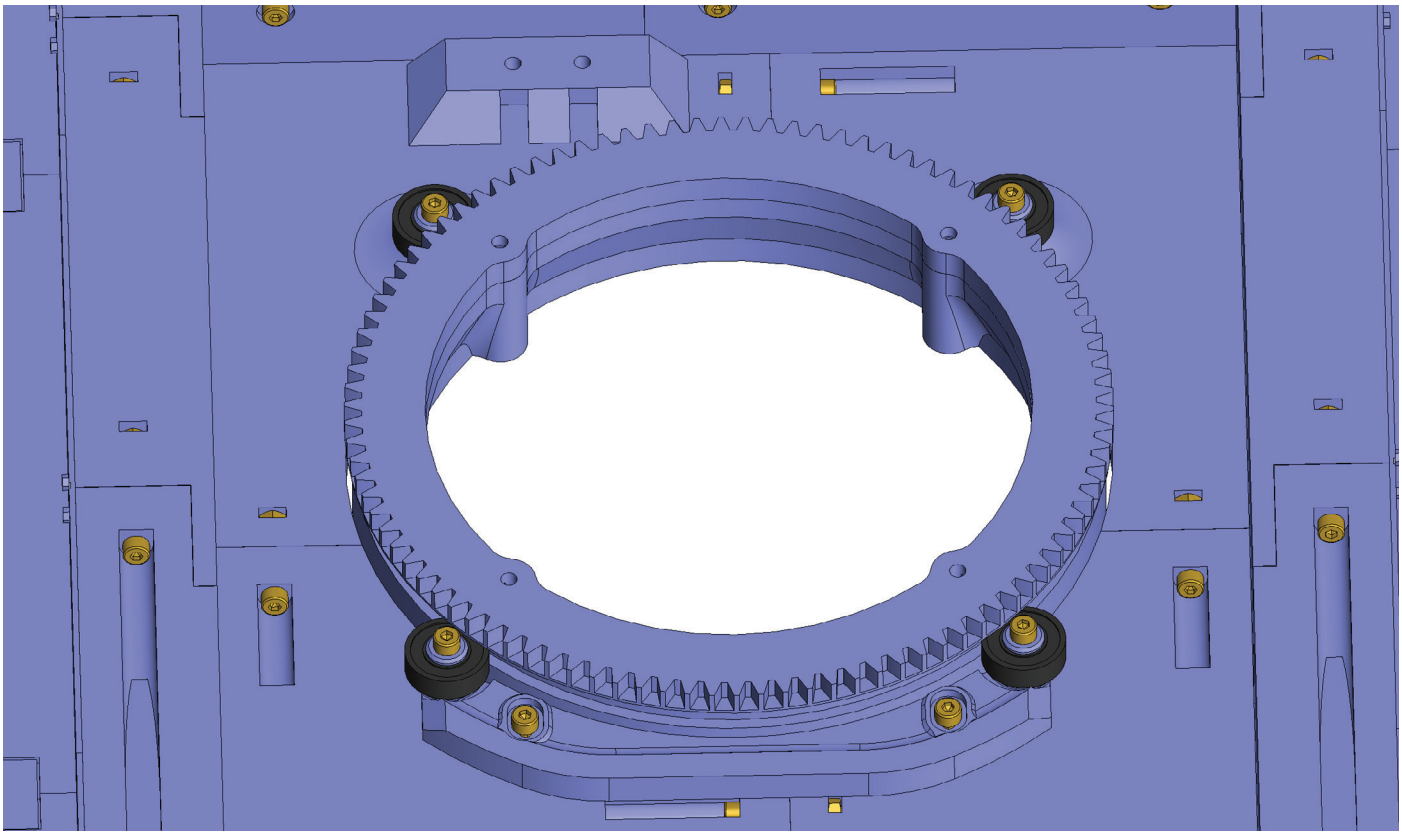

Fix the turret rotation ring. Insert the 02-57A+B and 02-58 parts assembly.
Fasten with two M4x16mm screws.The screws move in the grooves.
Use these grooves to define the clearance between the bearings and the turret ring.

Assembly 02 - Upper Hull

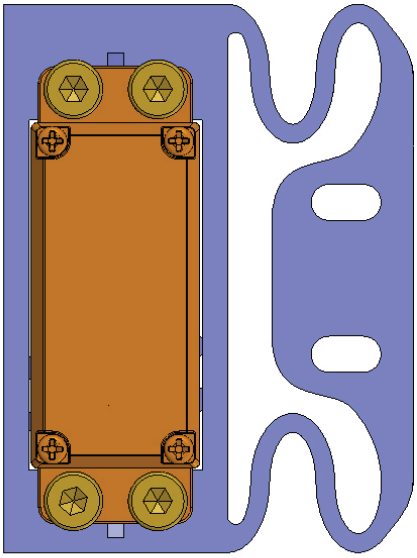

MG995 360° servo or compatible
+02-59A_SERVO

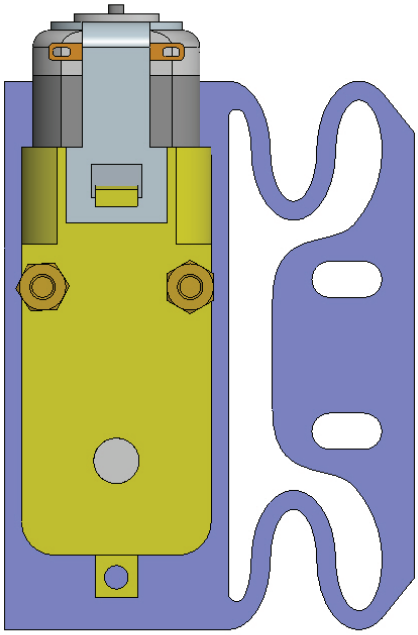

TT Geared motor or compatible
+02-59A_TT

You can use 2 different types of motors for turret rotation.
Use TT Geared motor with parts 02-59A_TT and 02-59B_TT.
Use MG995 360° servo with parts 02-59A_SERVO and 02-59B_SERVO.

Assembly 02 - Upper Hull

MG995 360° servo or compatible

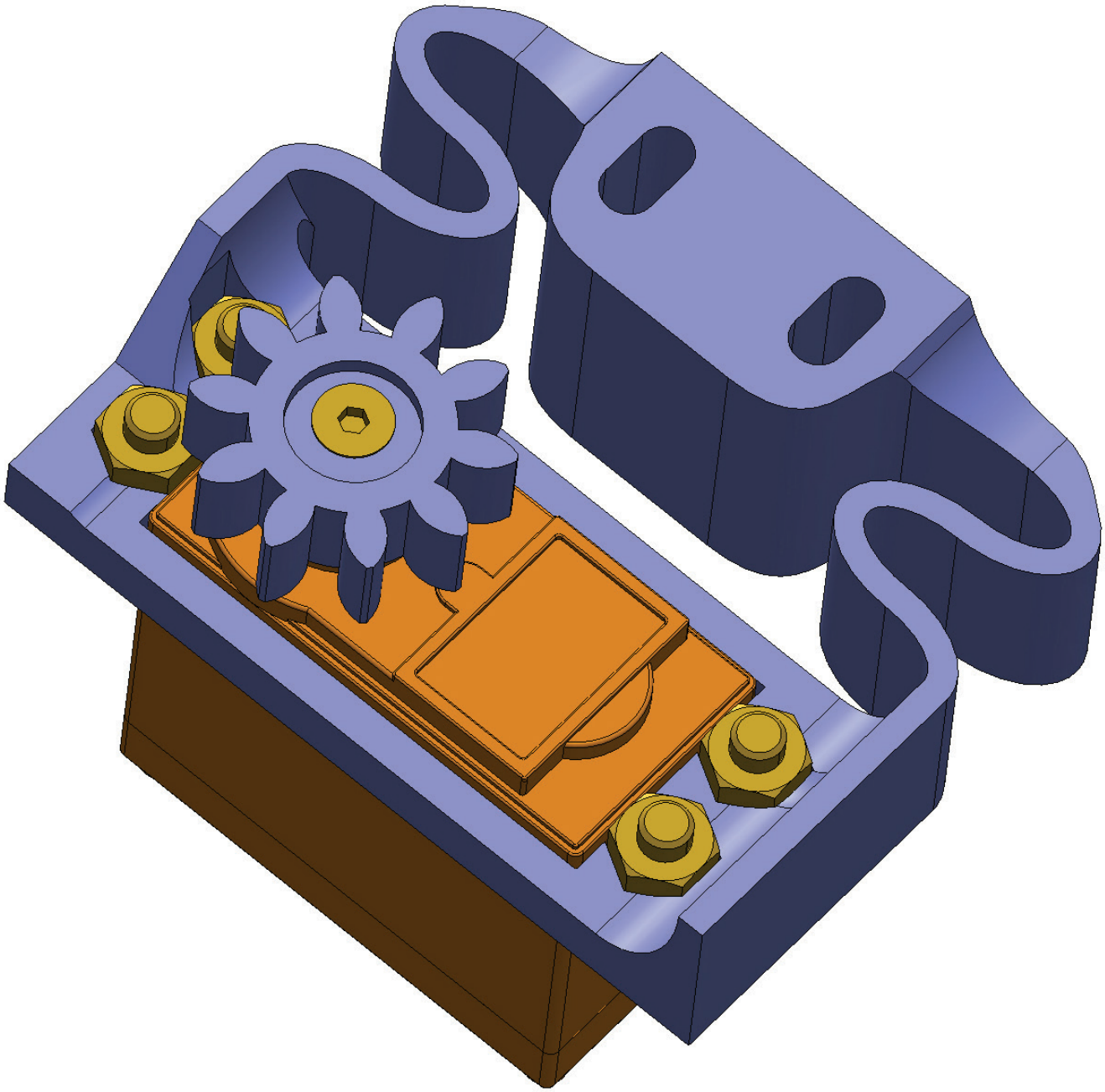

Assembly 02 - Upper Hull

MG995 360° servo or compatible

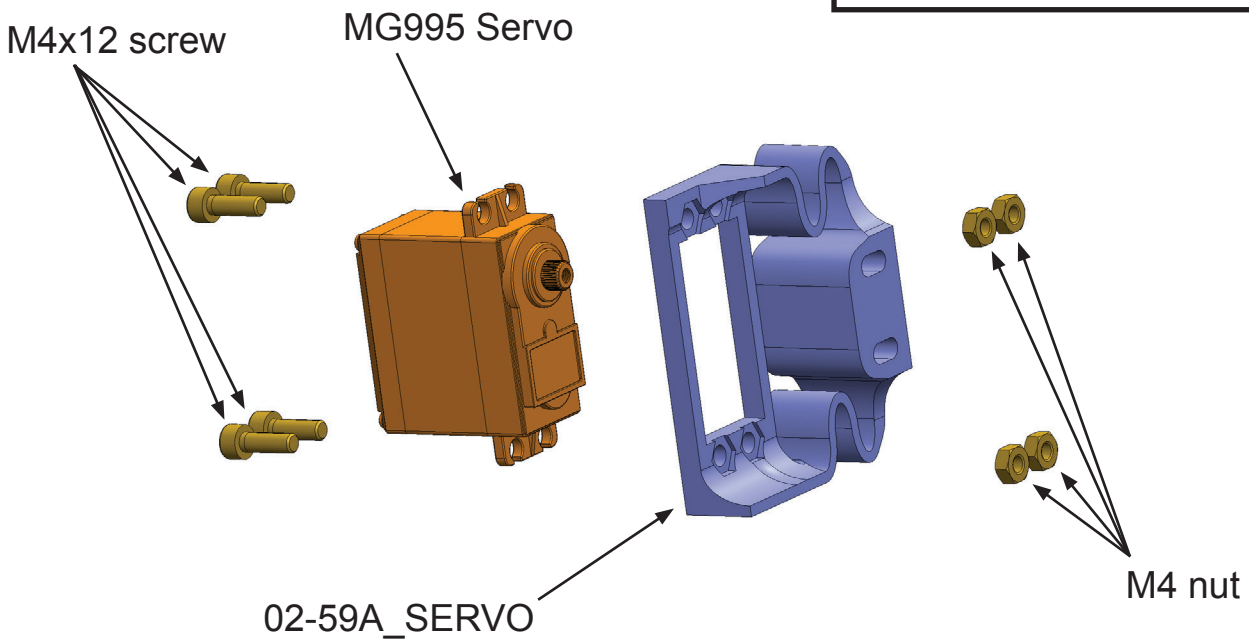



Attach a MG995 (360°) or other compatible servo to part 02-59A_SERVO.
Use 4 M4x12 screws and M4 nuts.

Assembly 02 - Upper Hull

MG995 360° servo or compatible

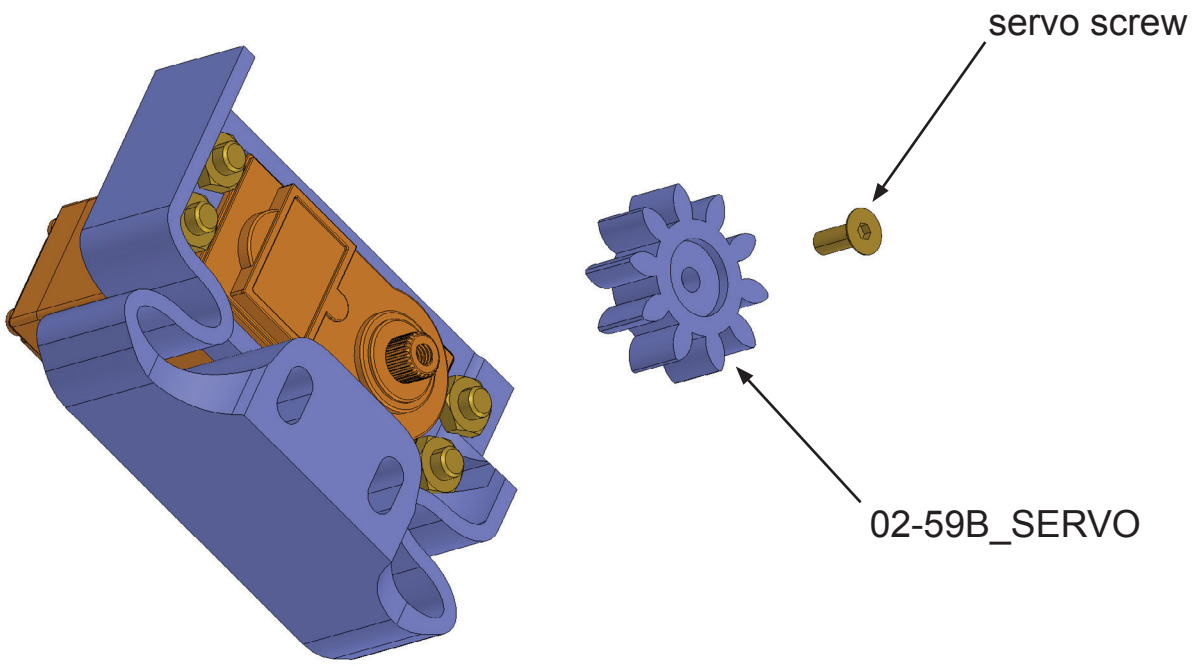

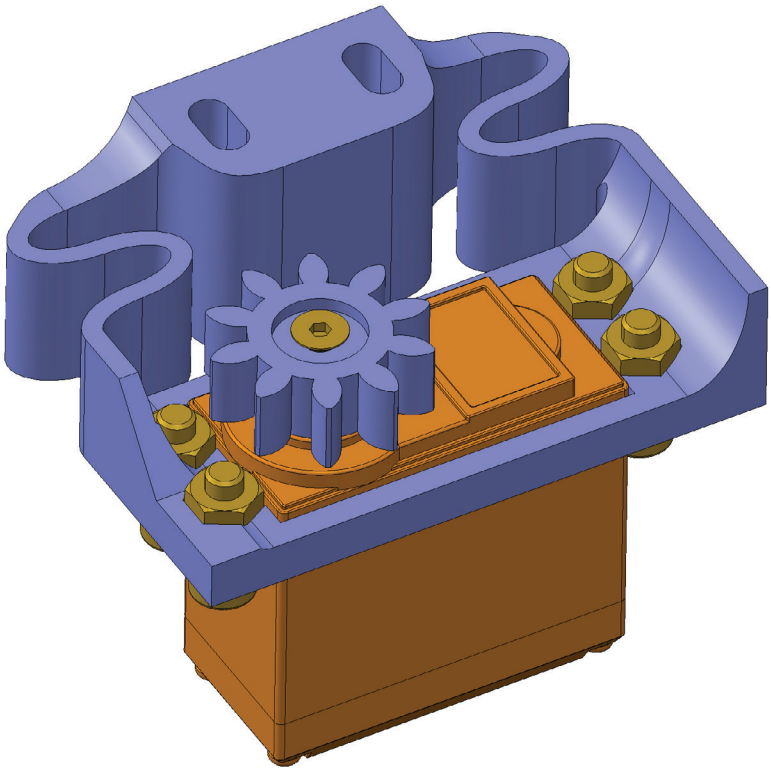

Attach the 02-59B_SERVO gear to the servo using the screw provided.
The screw is part of the servomotor package.

Assembly 02 - Upper Hull

MG995 360° servo or compatible

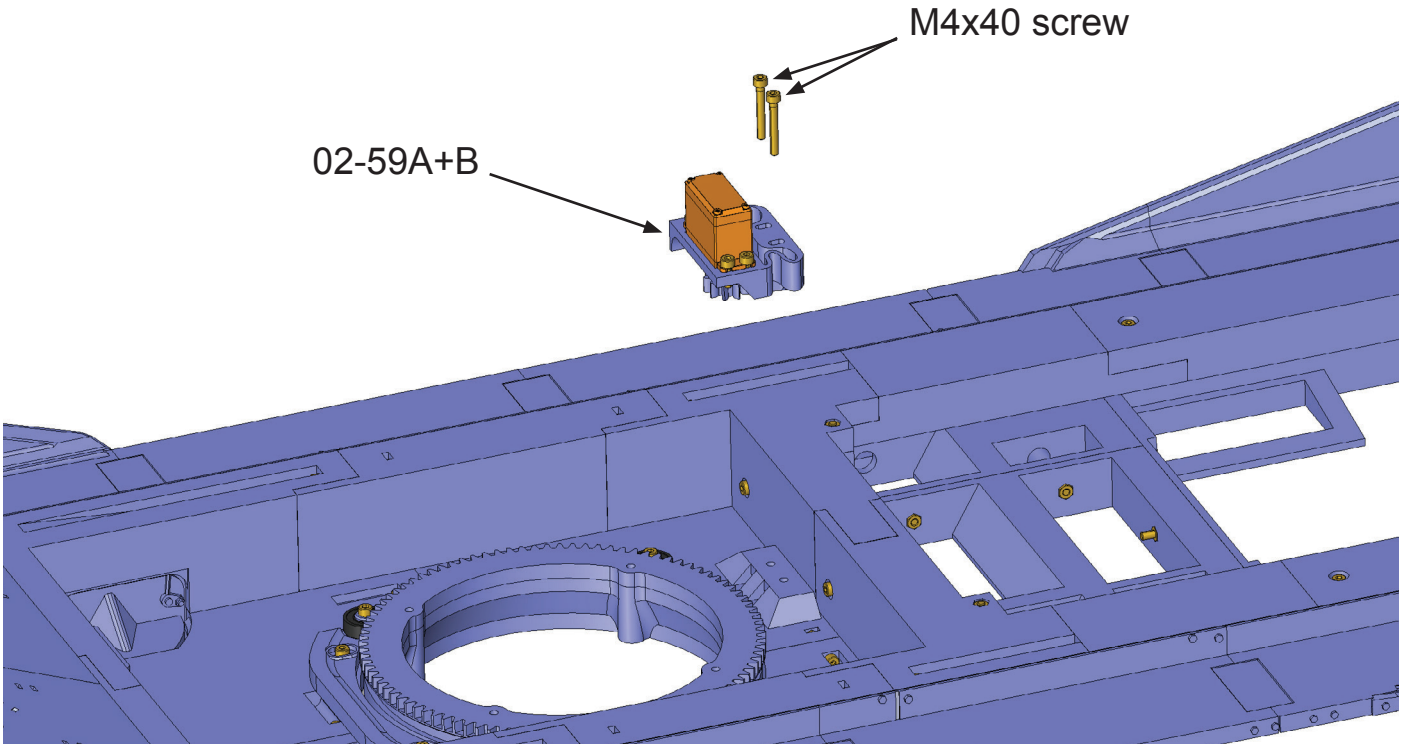

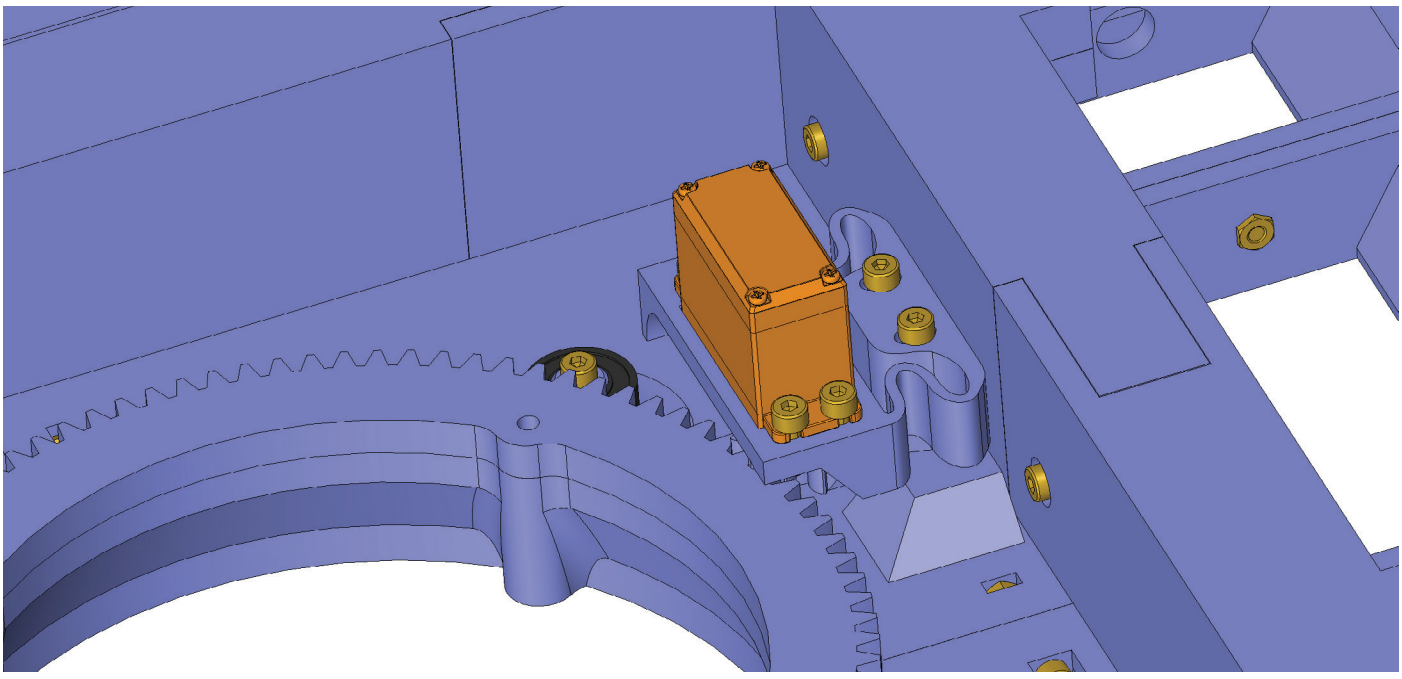

Insert the parts assembly 02-59A+B (SERVO).
Fasten the servo with two M4x40mm screws. The screws move in the grooves.
Use these grooves to define the clearance between the gears.

Assembly 02 - Upper Hull

Assembly 02 - Upper Hull

TT motor or compatible geared motor

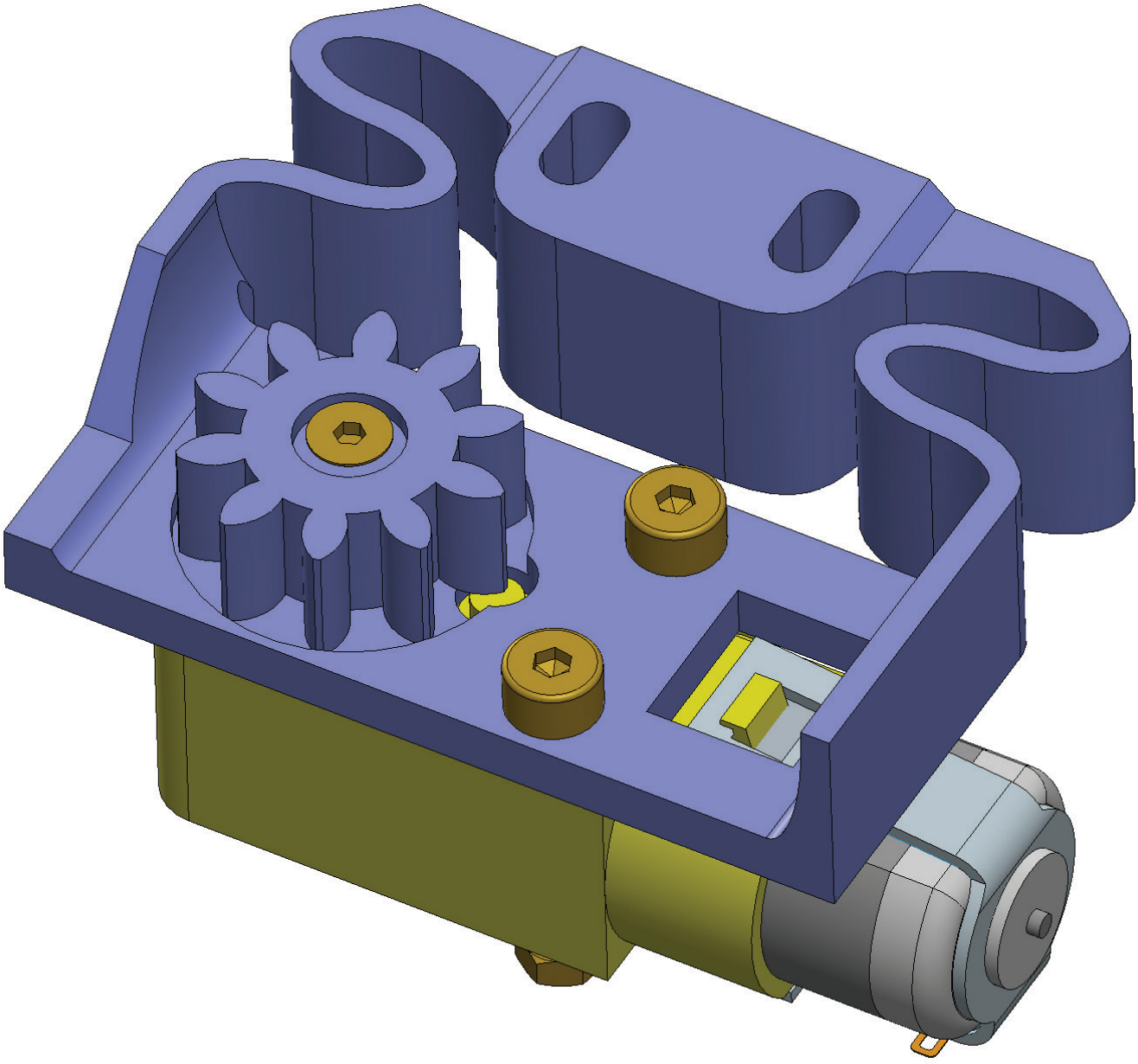

Assembly 02 - Upper Hull

TT motor or compatible geared motor

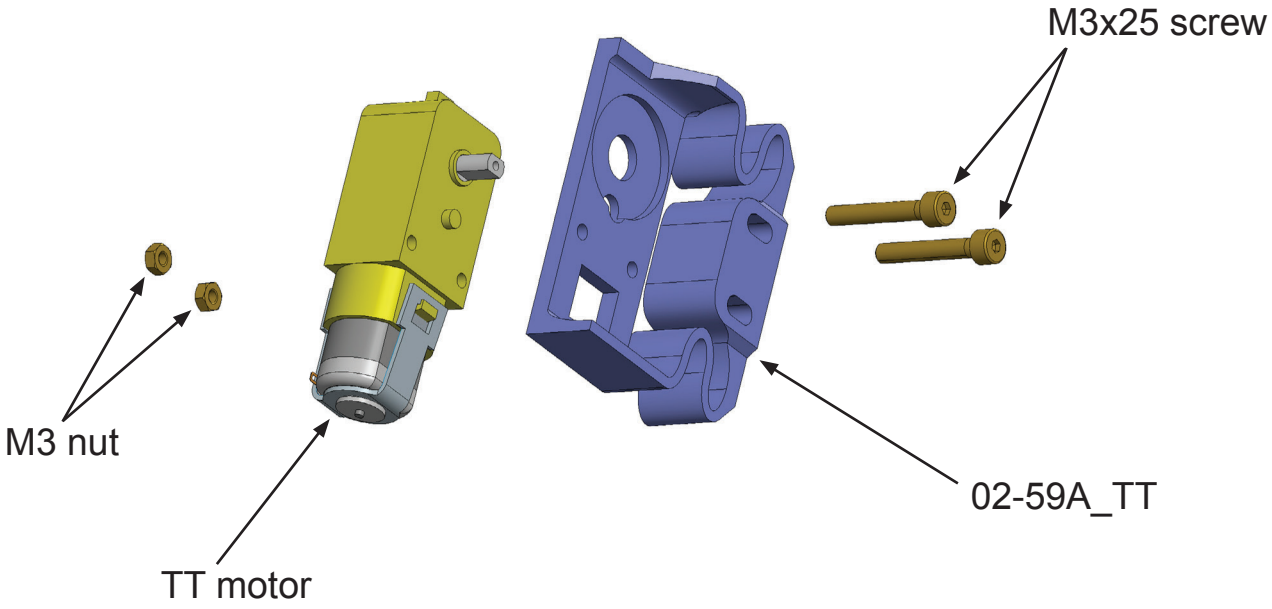



Attach a TT motor or other compatible motor to part 02-59A_TT.
Use two M3x25 screws and M3 nuts.

Assembly 02 - Upper Hull

TT motor or compatible geared motor

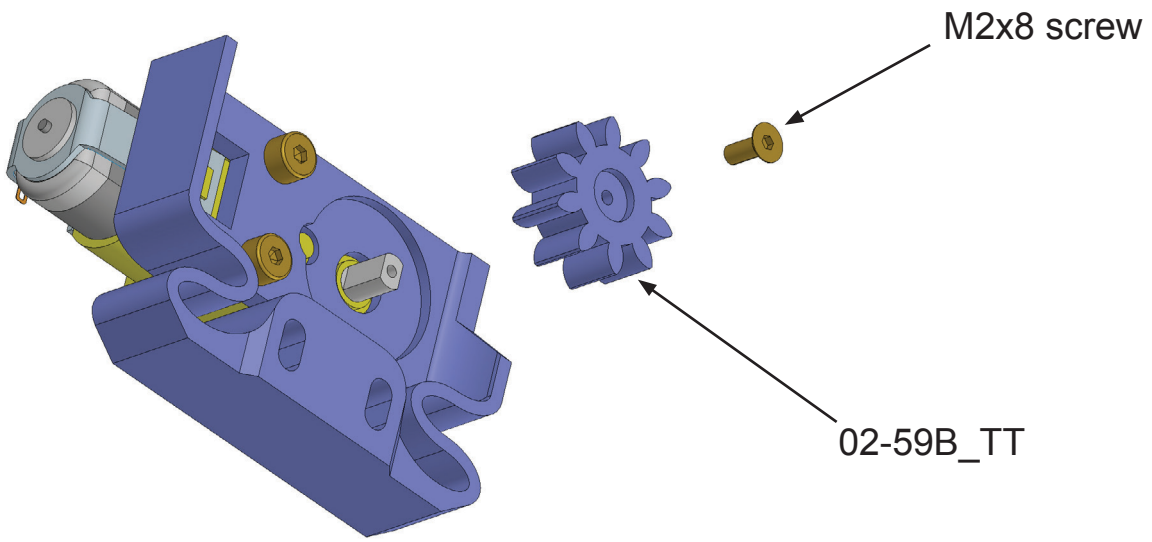

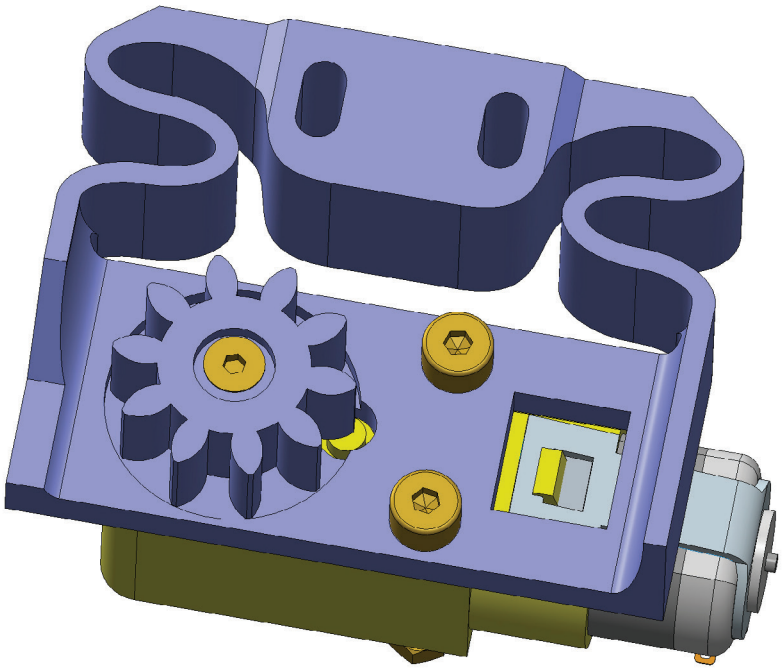

Attach the 02-59B_TT gear to the motor using M2x8 screw.

Assembly 02 - Upper Hull

TT motor or compatible geared motor

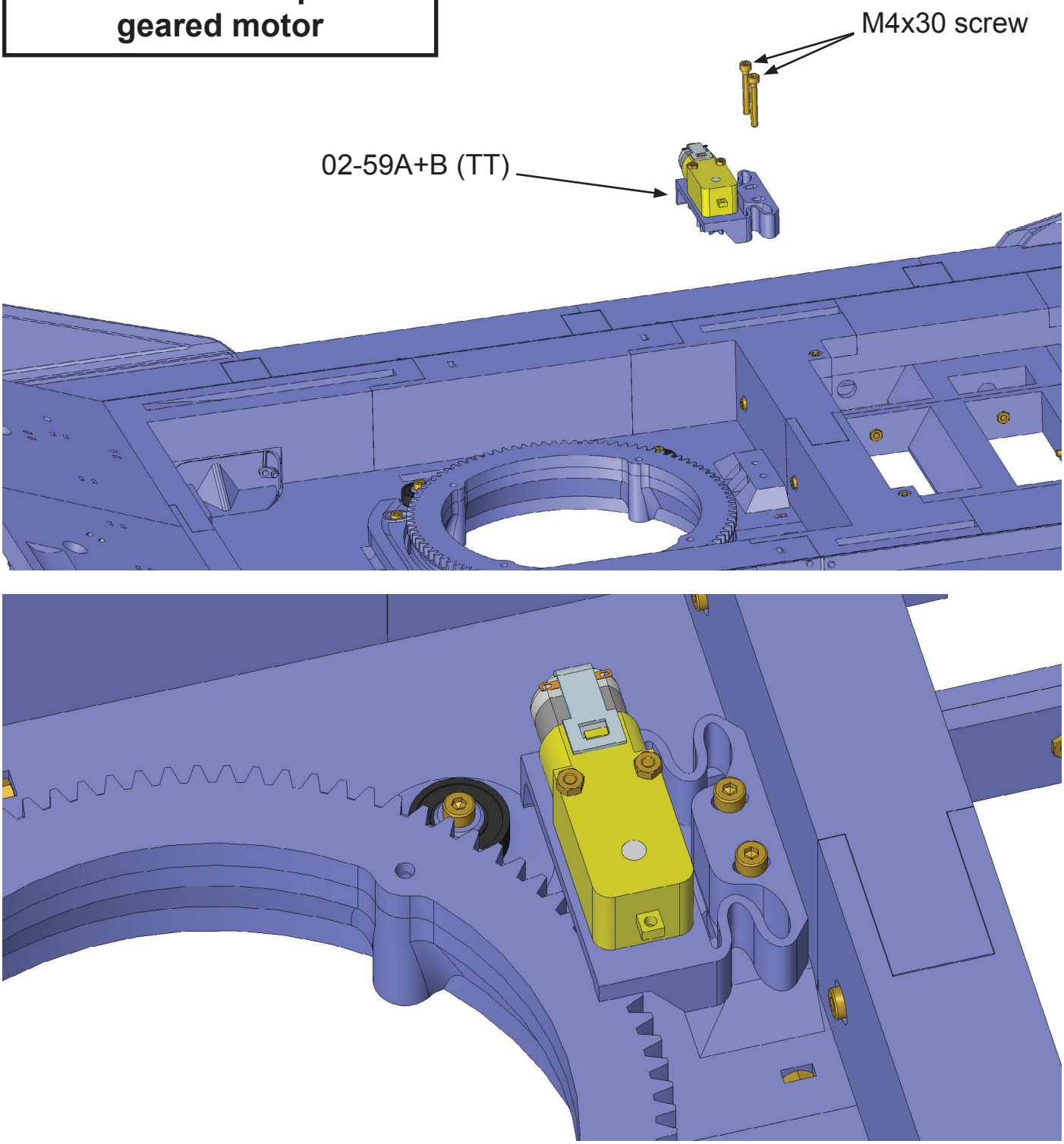

Insert the parts assembly 02-59A+B (TT).
Fasten the motor with two M4x30mm screws. The screws move in the grooves.
Use these grooves to define the clearance between the gears.

Assembly 02 - Upper Hull

Assembly 03 - Engine Cover

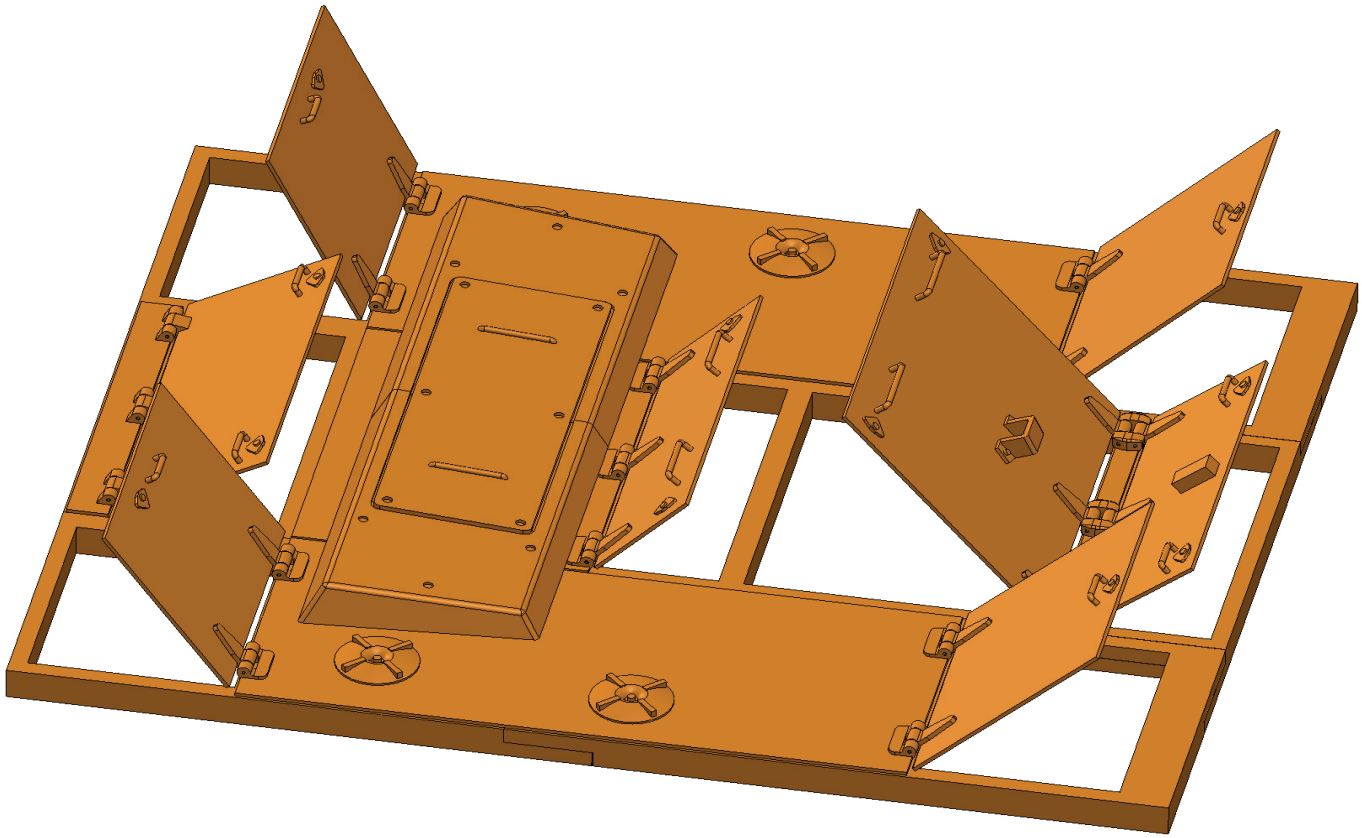

3D PRINTED PARTS:	03-01A (1x), 03-01B (1x), 03-02A (1x), 03-02B (1x), 03-02C (1x), 03-03 (1x), 03-04 (1x), 03-05 (2x), 03-06 (1x), 03-07 (1x), 03-08 (1x), 03-09 (1x), 03-10 (1x), 03-11 (1x), 03-12A (1x), 03-12B (1x), 03-12C (1x).
OPTIONAL 3D PRINTED PARTS:	03-01AB (1x), 03-05_no_handles (2x), 03-06_no_handles (1x), 03-07_no_handles (1x), 03-08_no_handles (1x), 03-09_no_handles (1x), 03-10_no_handles (1x), 03-11_no_handles (1x).
NON-PRINTED PARTS:	M4 nut (10x), M4x20 screw (2x), M4x30 screw (2x), wire -diameter 1mm -lenght 16mm (20x).

Assembly 03 - Engine Cover

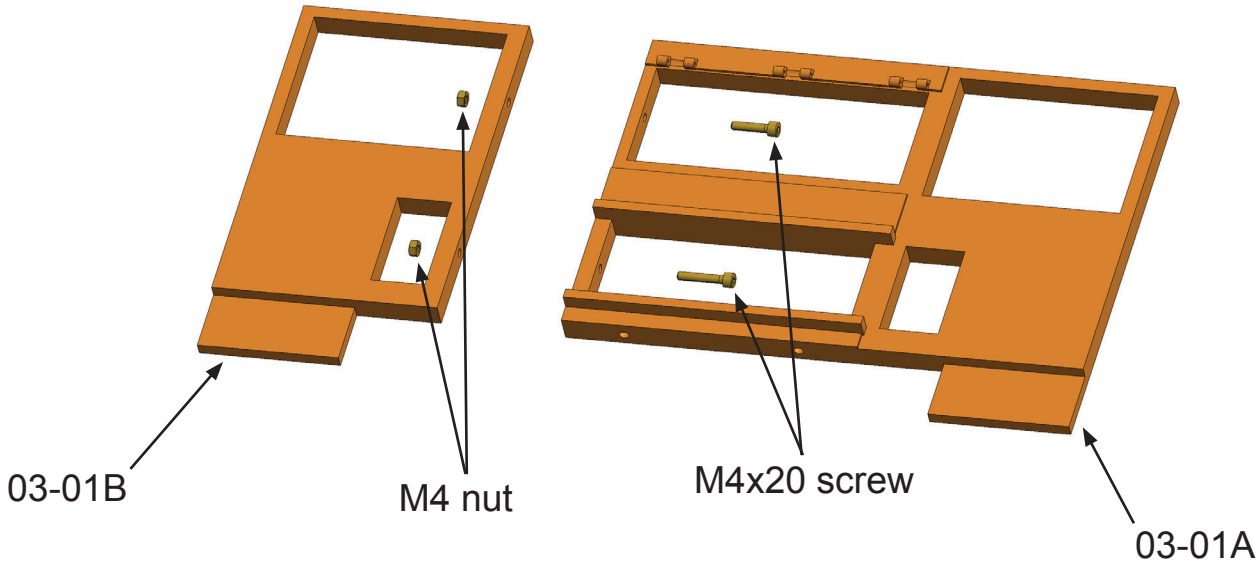

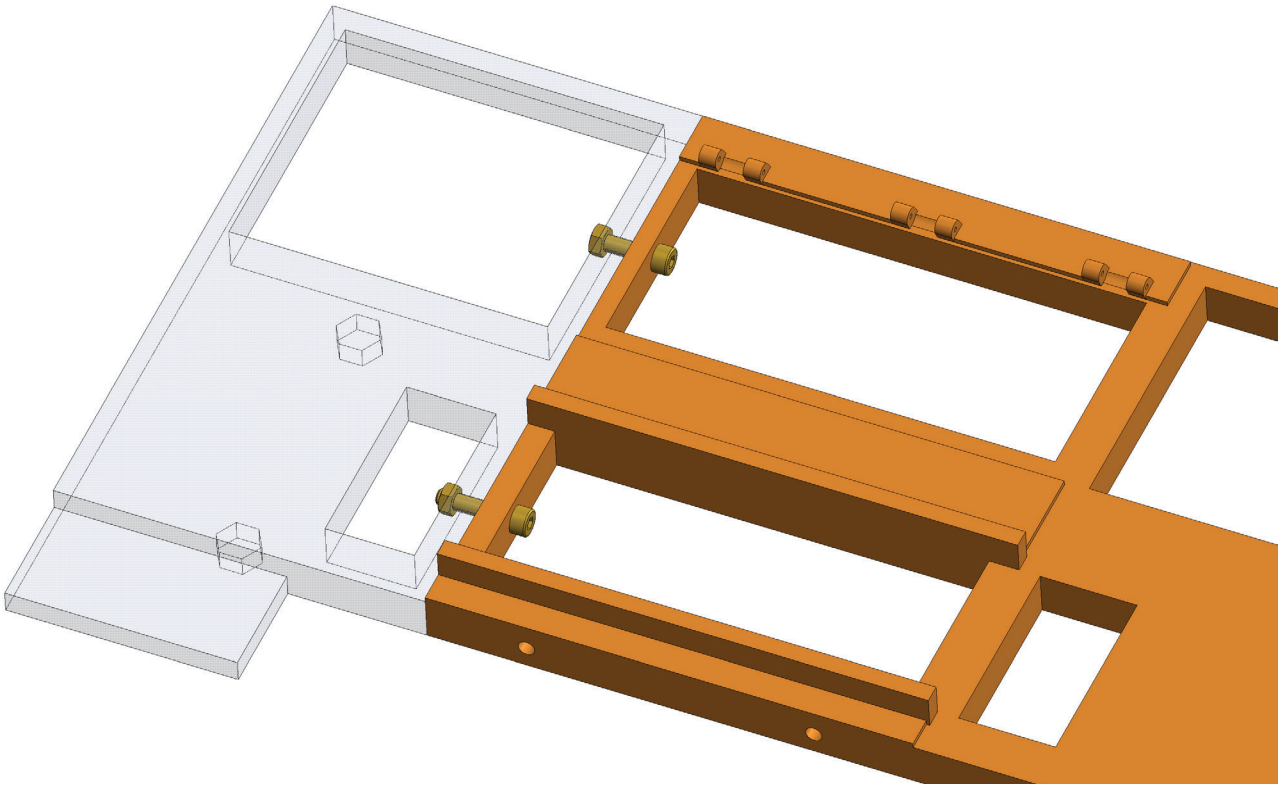

Glue parts 03-01A and 03-01B.
Insert two M4 nuts, use 2 M4x20 screws.
SKIP THIS STEP, IF YOU HAVE BIG PRINTER (USE PART 03-01AB).

Assembly 03 - Engine Cover

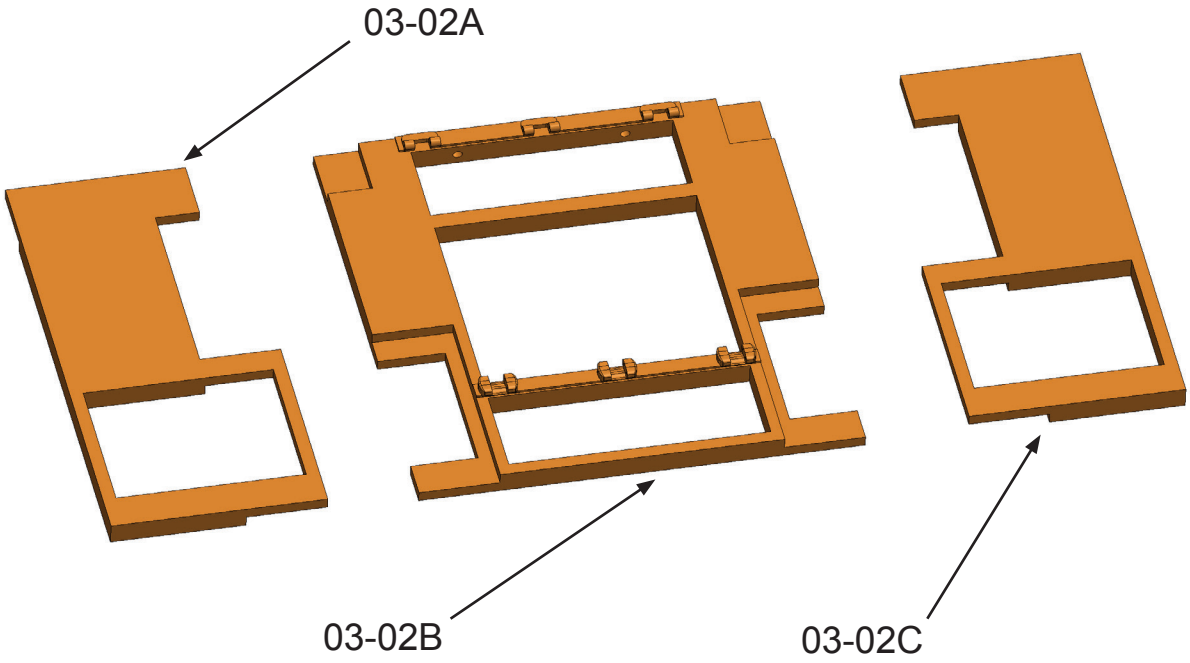

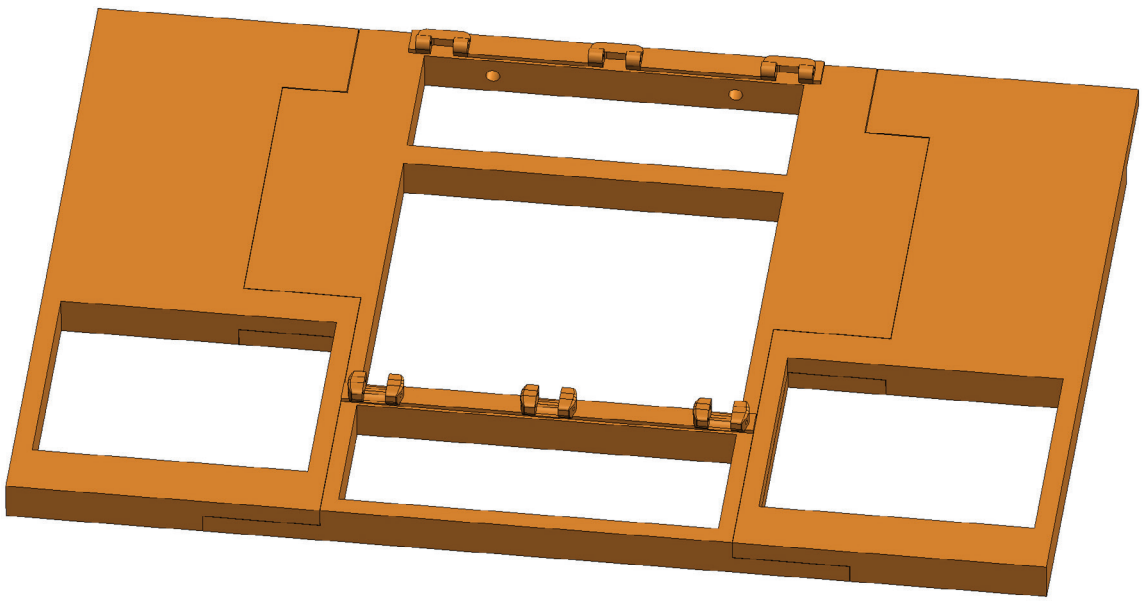

Glue parts 03-02A, 03-02B and 03-02C together.

Assembly 03 - Engine Cover

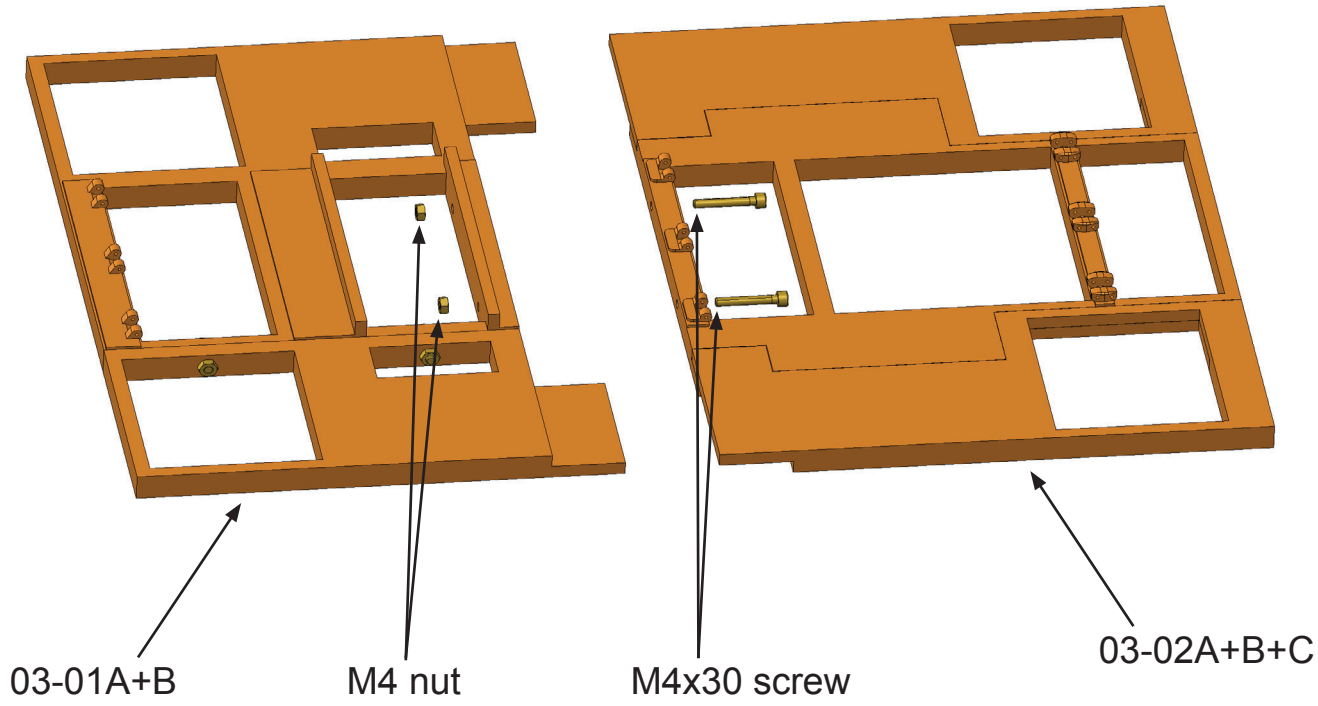

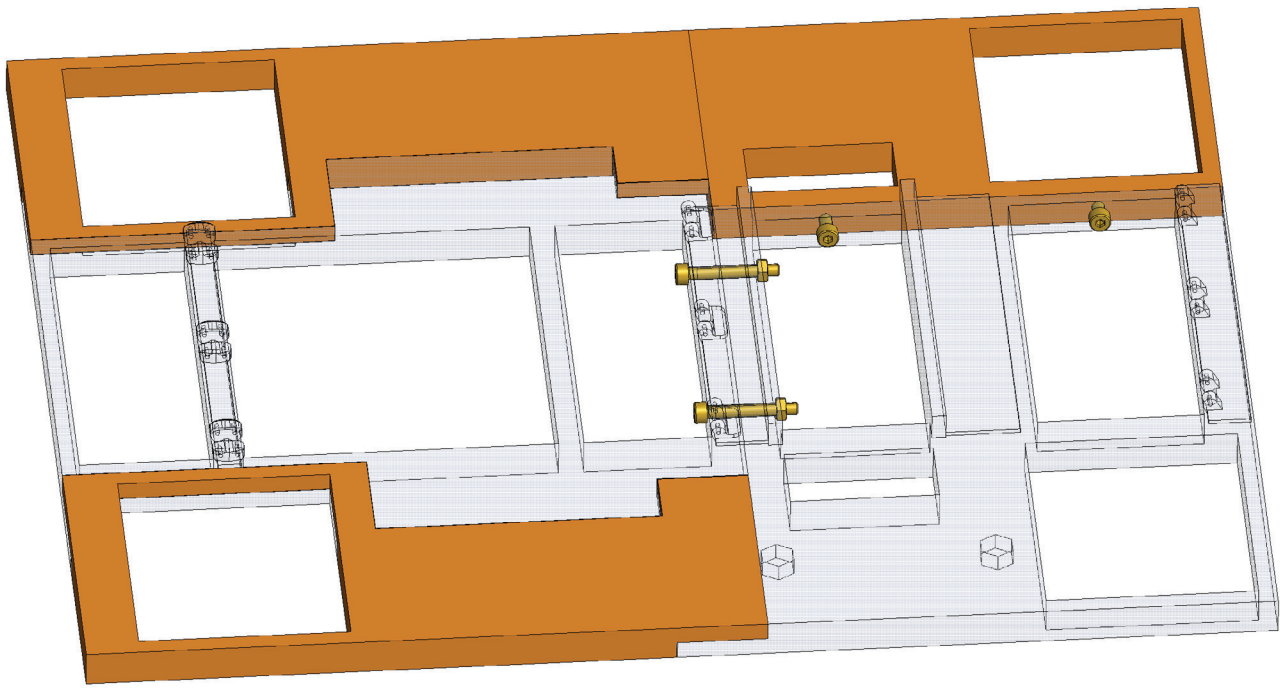

Glue the prepared assemblies of parts 03-01A+B and 03-02A+B+C.
Secure the whole parts assemblies with M4x30 screws and M4 nuts.

Assembly 03 - Engine Cover

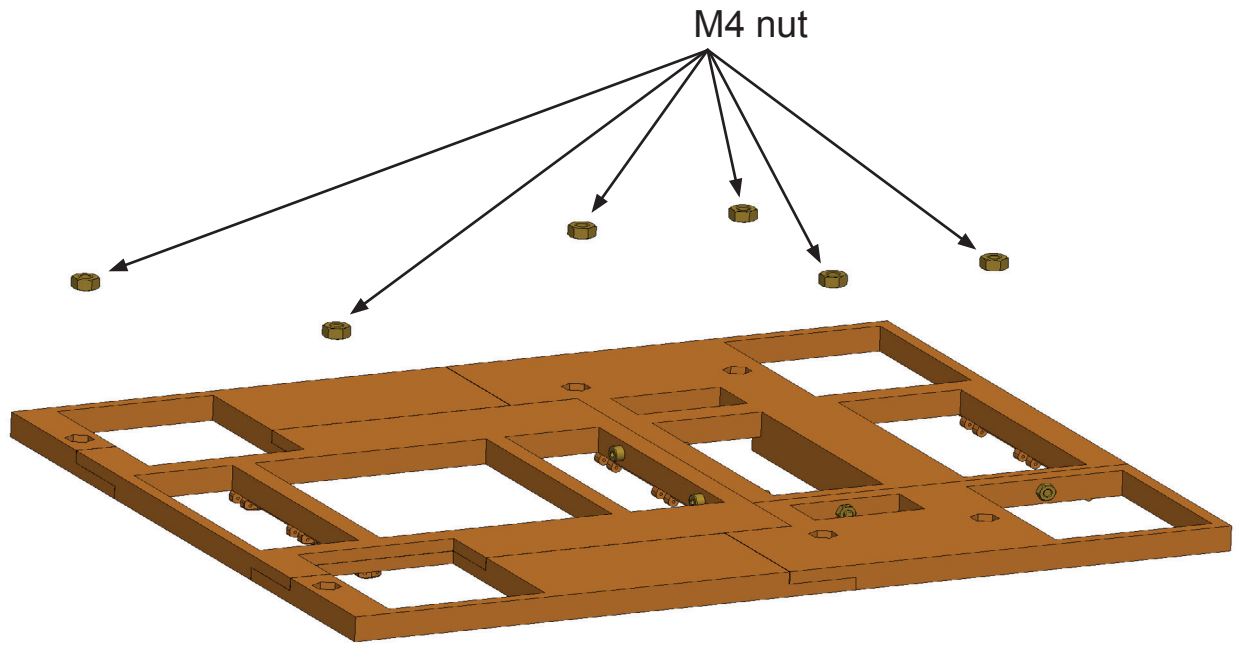

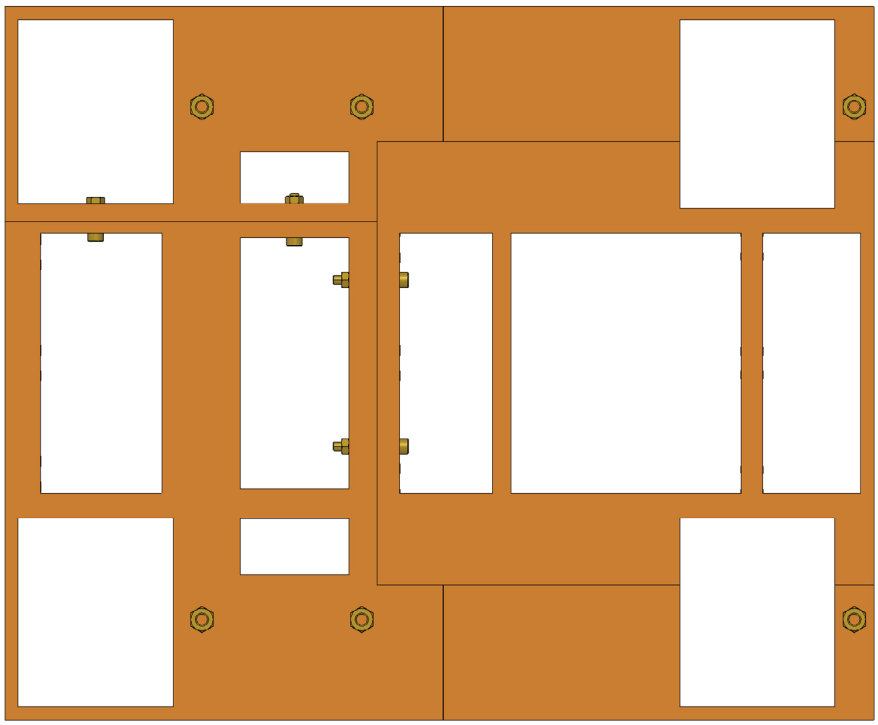

Glue 6 M4 nuts into parts 03-01 and 03-02.

Assembly 03 - Engine Cover

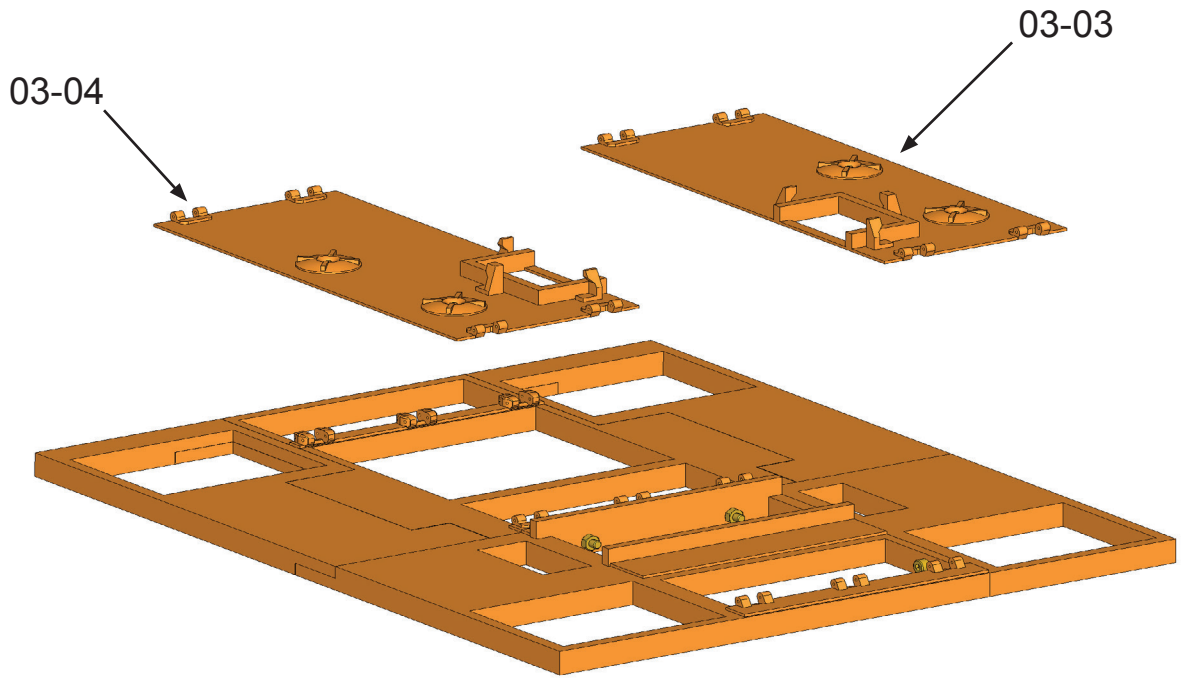

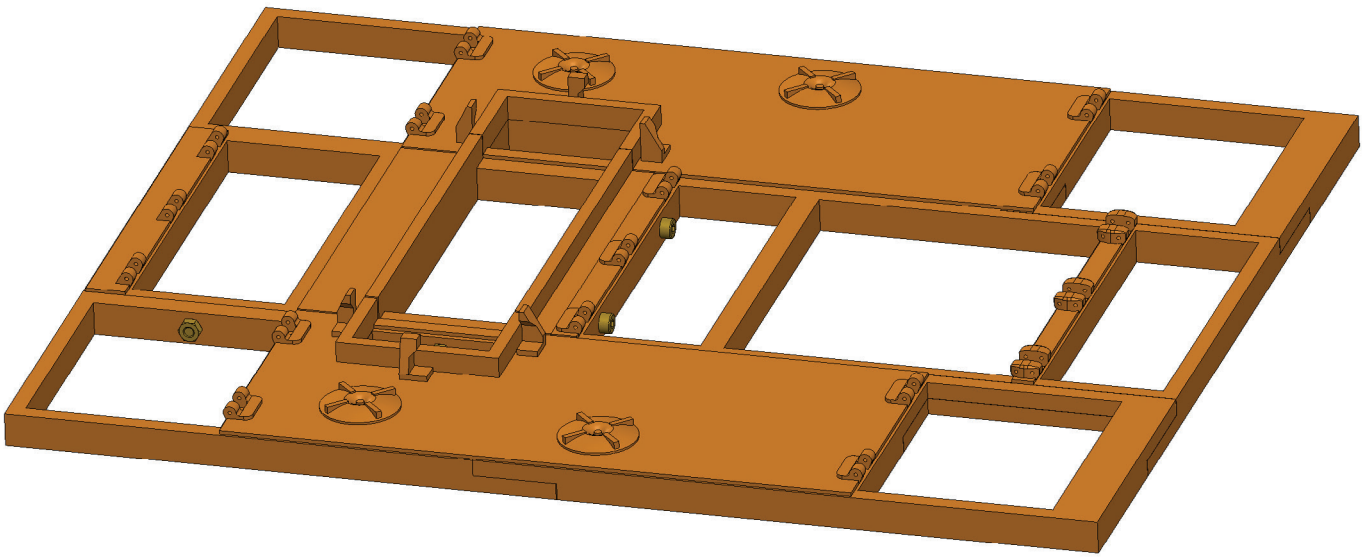

Glue parts 03-03 and 03-04.

Assembly 03 - Engine Cover

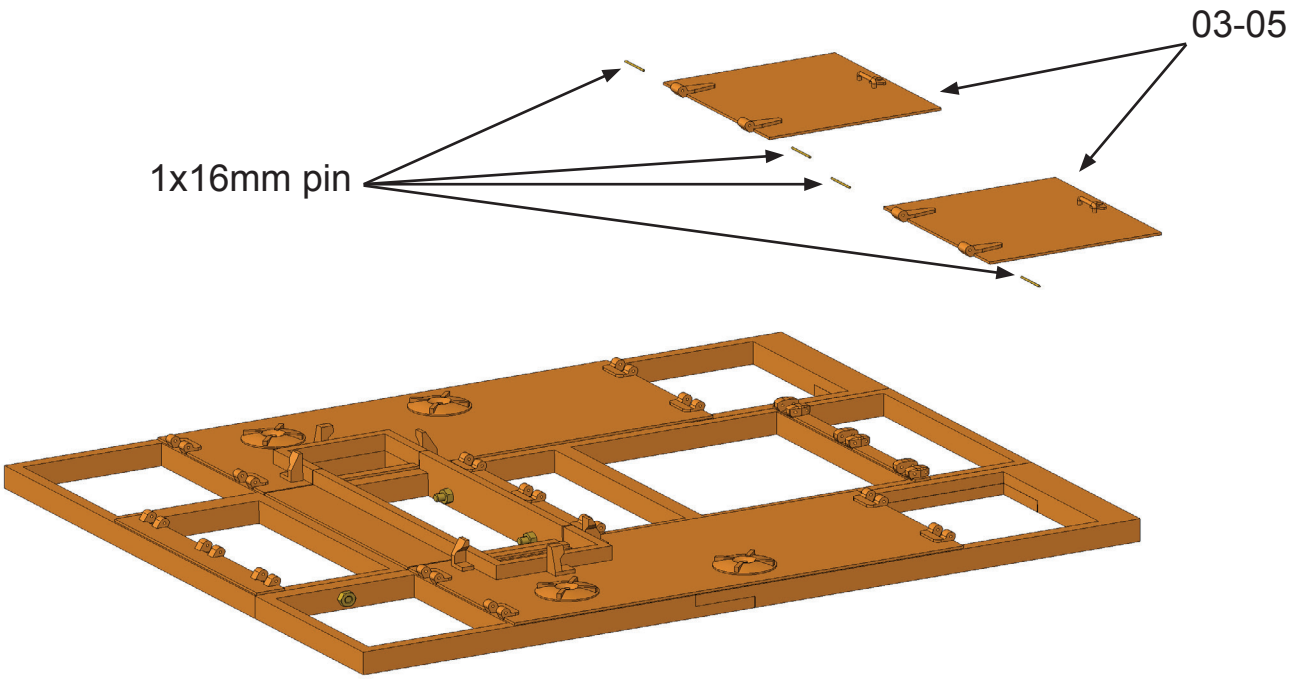

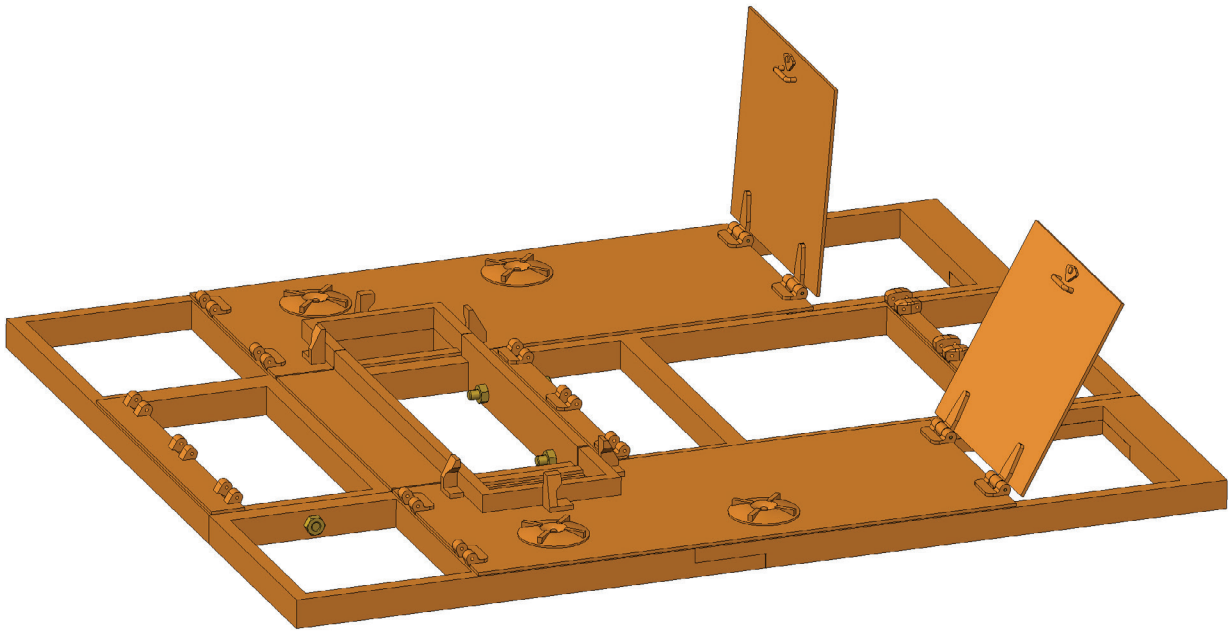

Attach two parts 03-05 to parts 03-03 and 03-04.
Use a wire with a diameter of 1mm.The length of the wire is 16mm.

Assembly 03 - Engine Cover

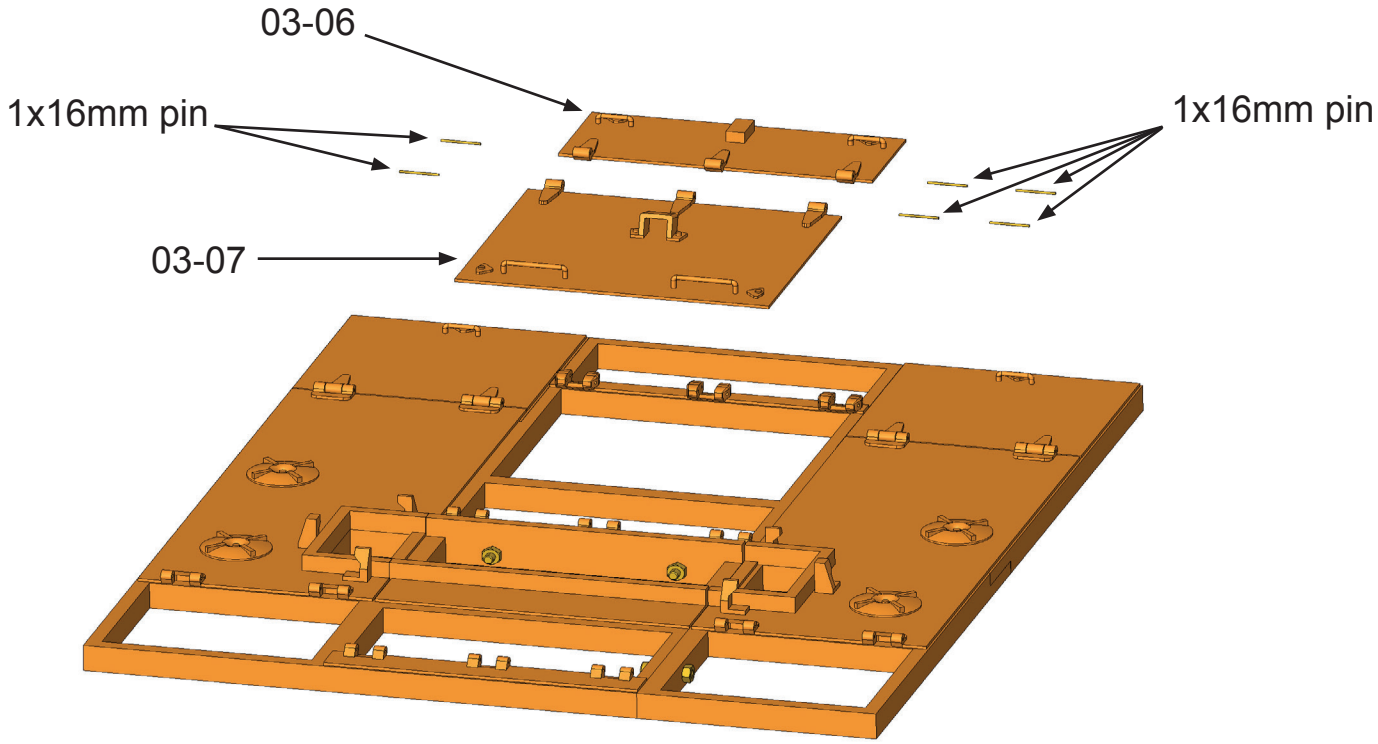

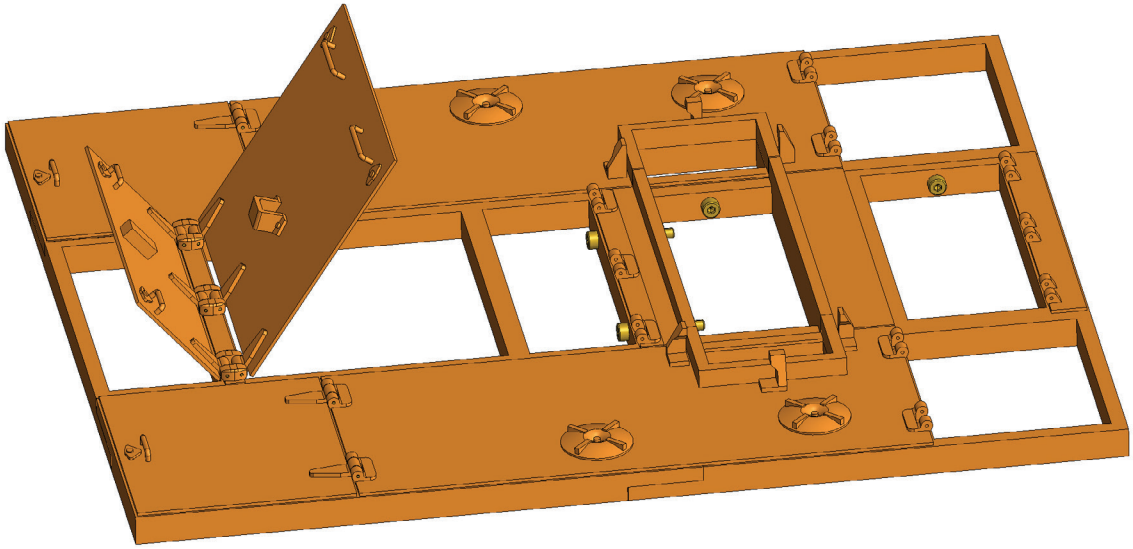

Attach part 03-06 and 03-07 to parts 03-02.
Use a wire with a diameter of 1mm.The length of the wire is 16mm.

Assembly 03 - Engine Cover

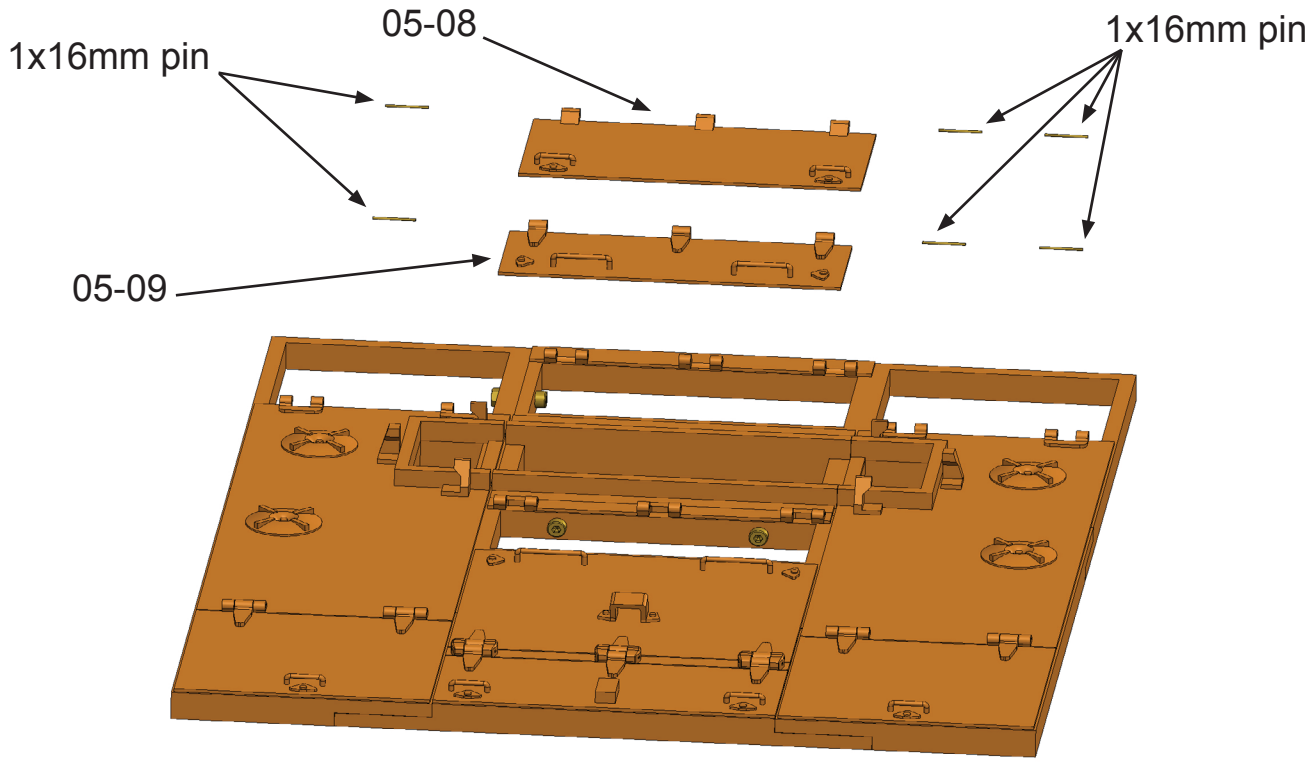

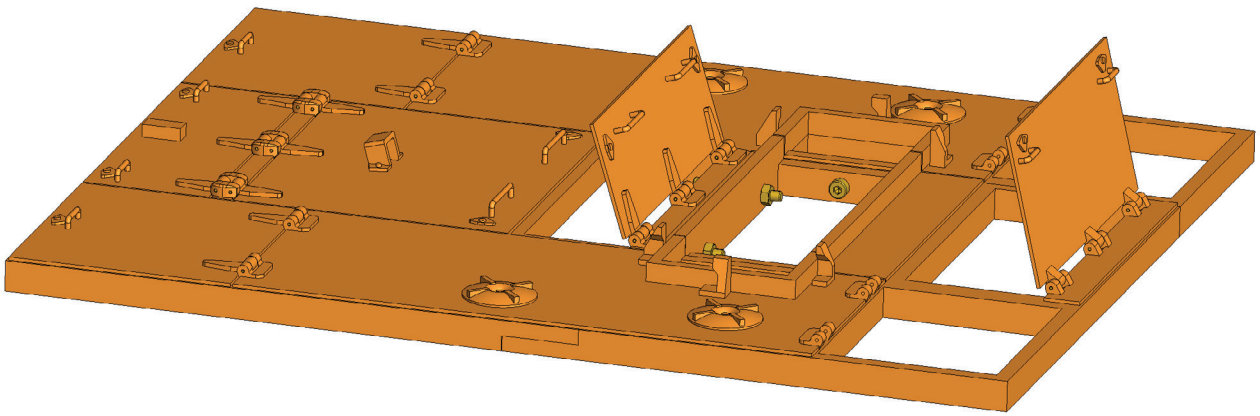

Attach part 03-10 and 03-09.
Use a wire with a diameter of 1mm.The length of the wire is 16mm.

Assembly 03 - Engine Cover

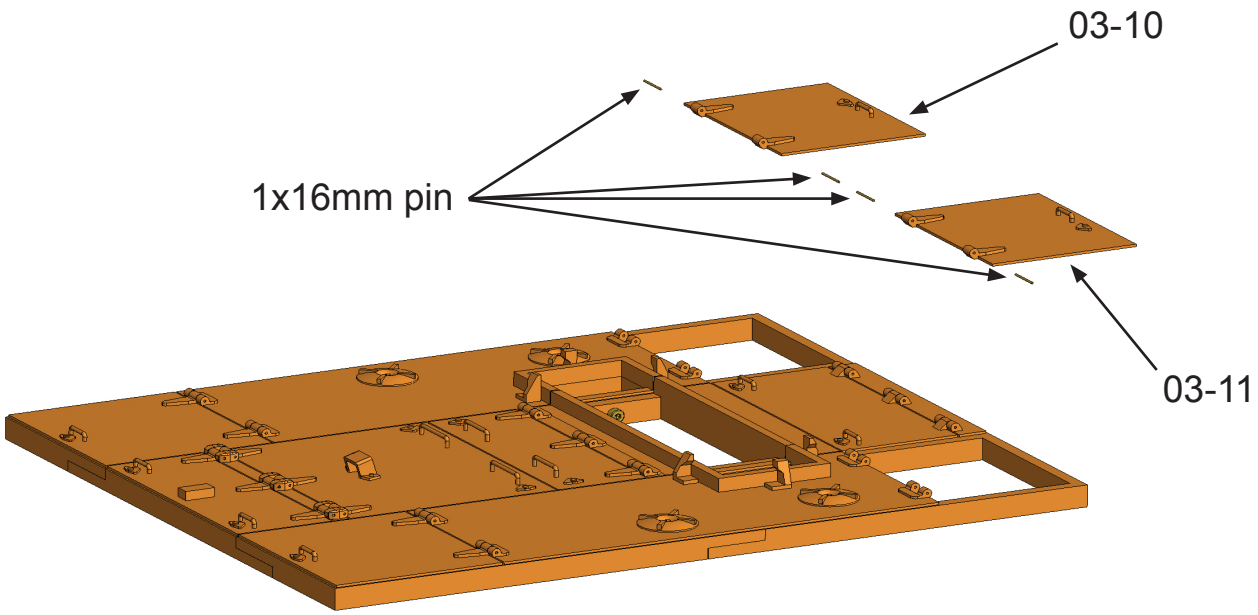

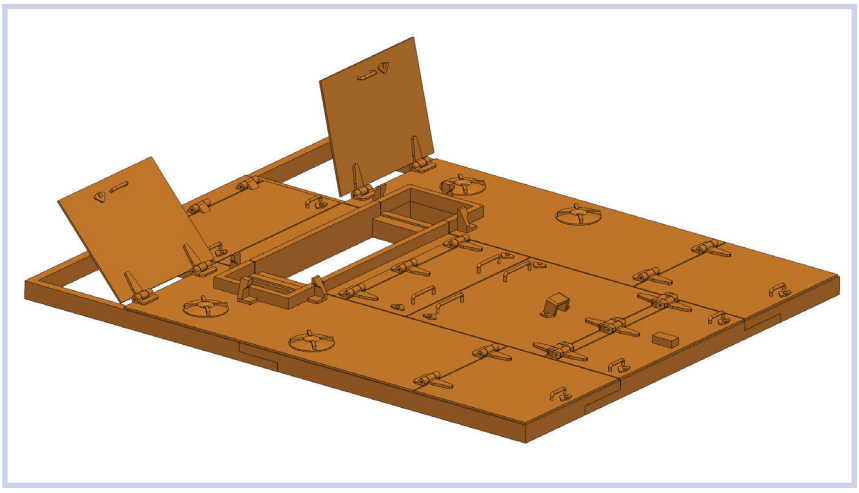

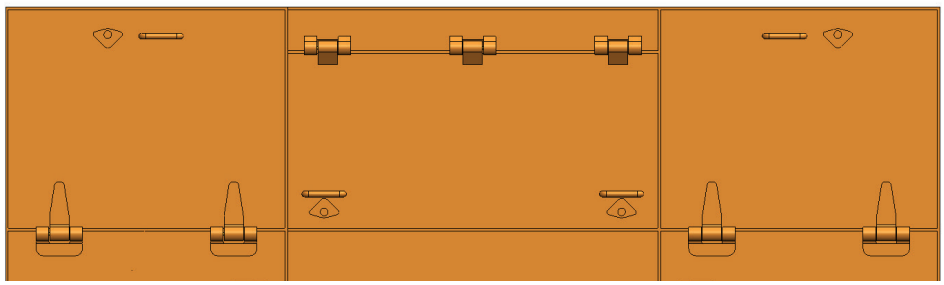

Attach part 03-10 and 03-11 to parts 03-01 .
Use a wire with a diameter of 1mm.The length of the wire is 16mm.

Assembly 03 - Engine Cover

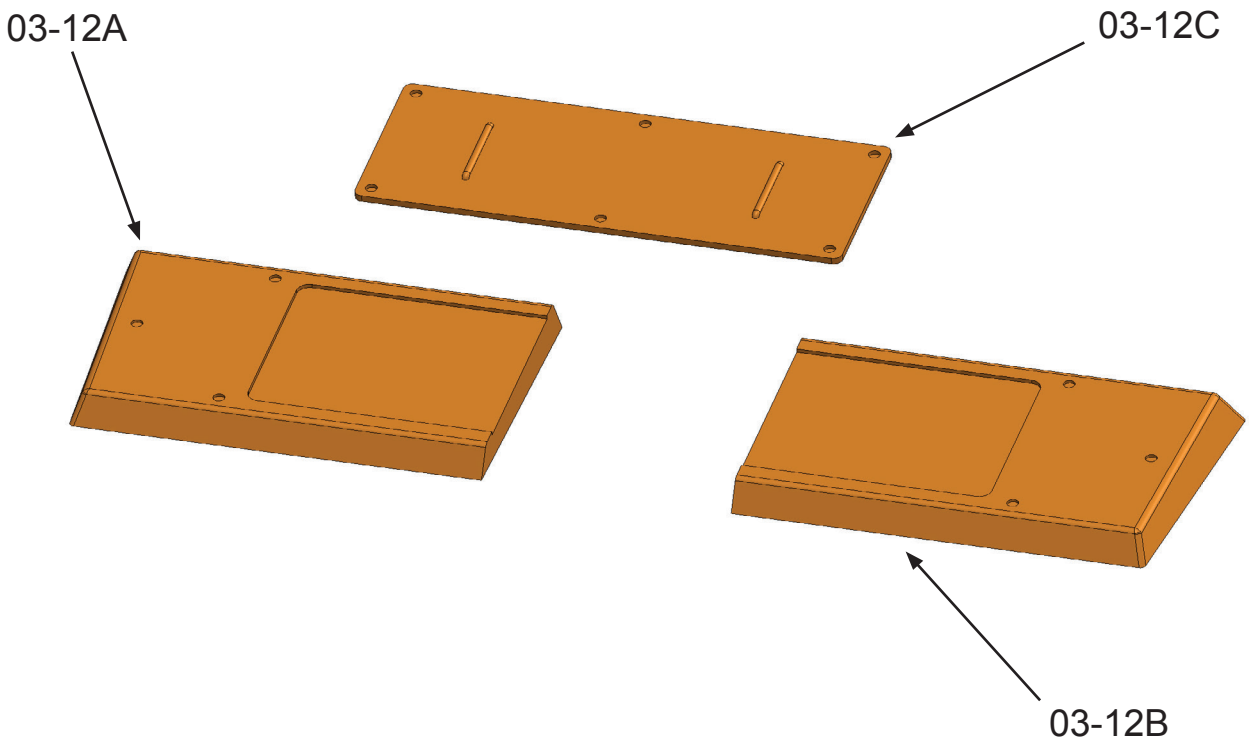

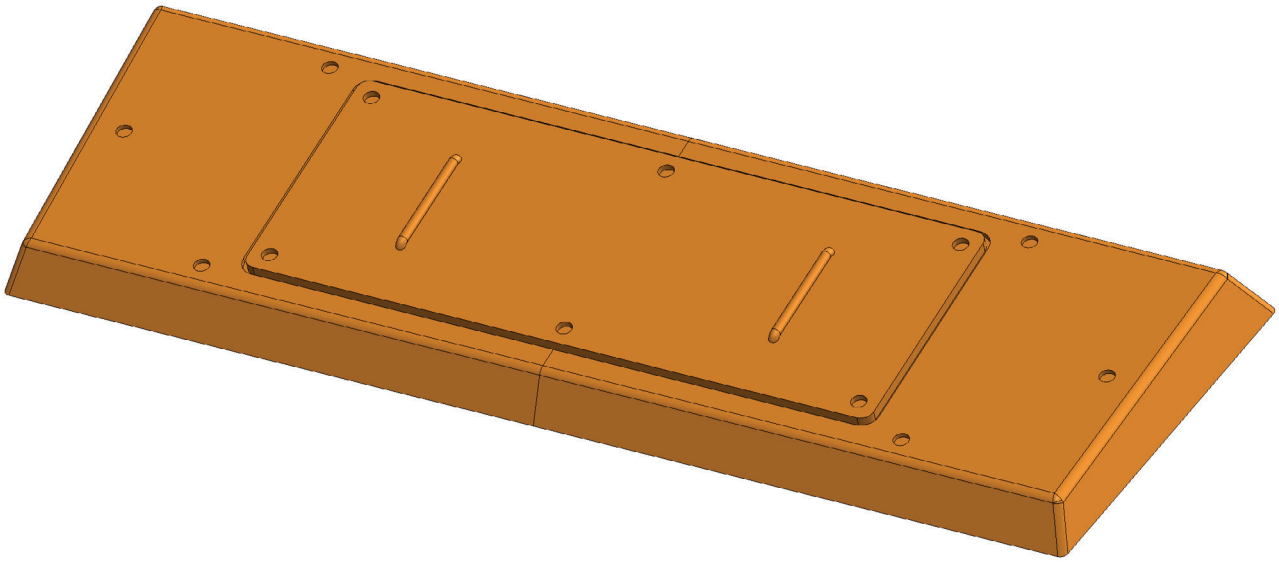

Glue parts 03-12A, 03-12B and 03-12C together.

Assembly 03 - Engine Cover

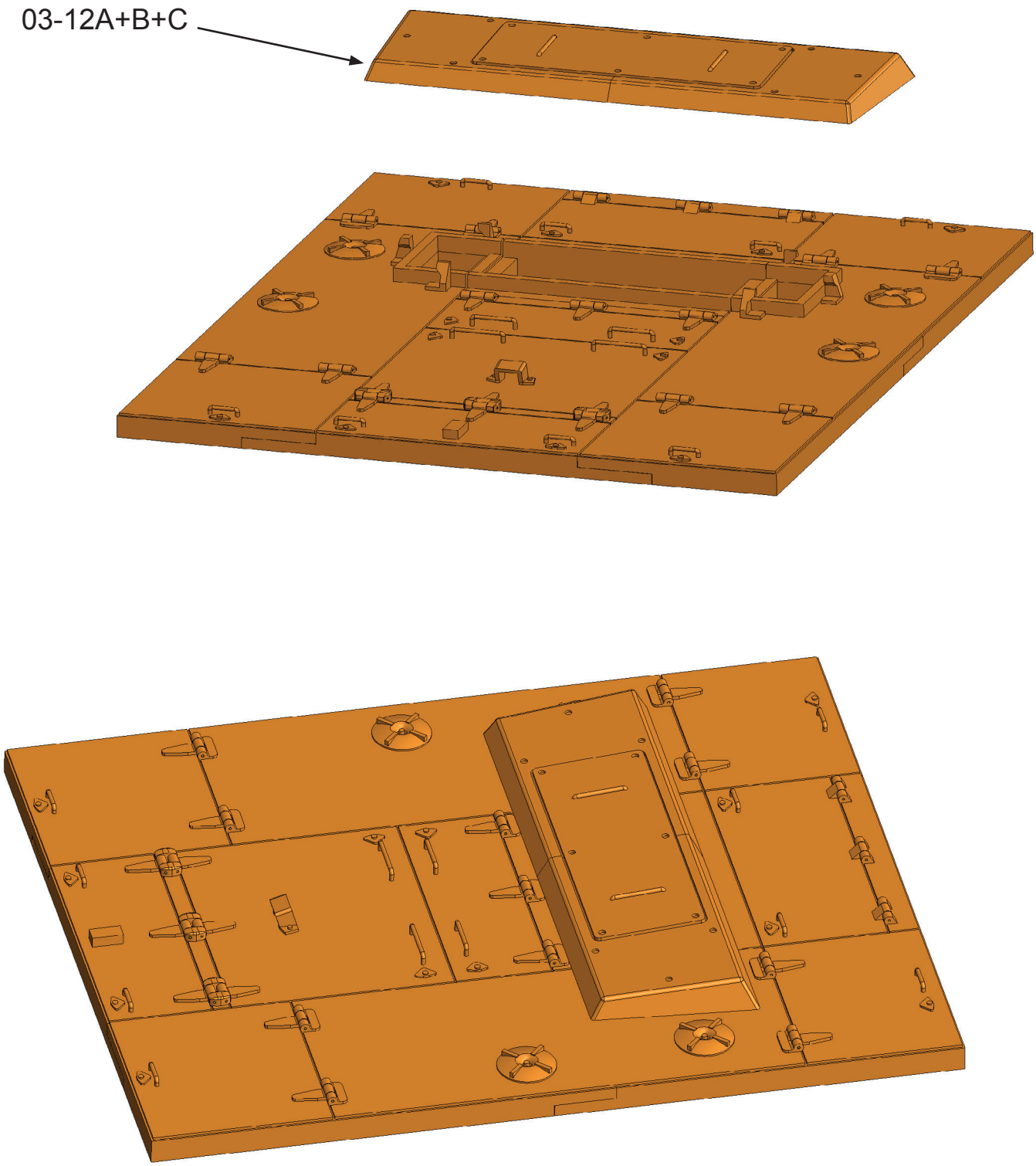

Glue the parts assembly 03-12A to 03-12C.

Assembly 03 - Engine Cover



Auxiliary views of parts 03-12A and 03-12B.

Assembly 03 - Engine Cover

Assembly 04 - Lower Turret

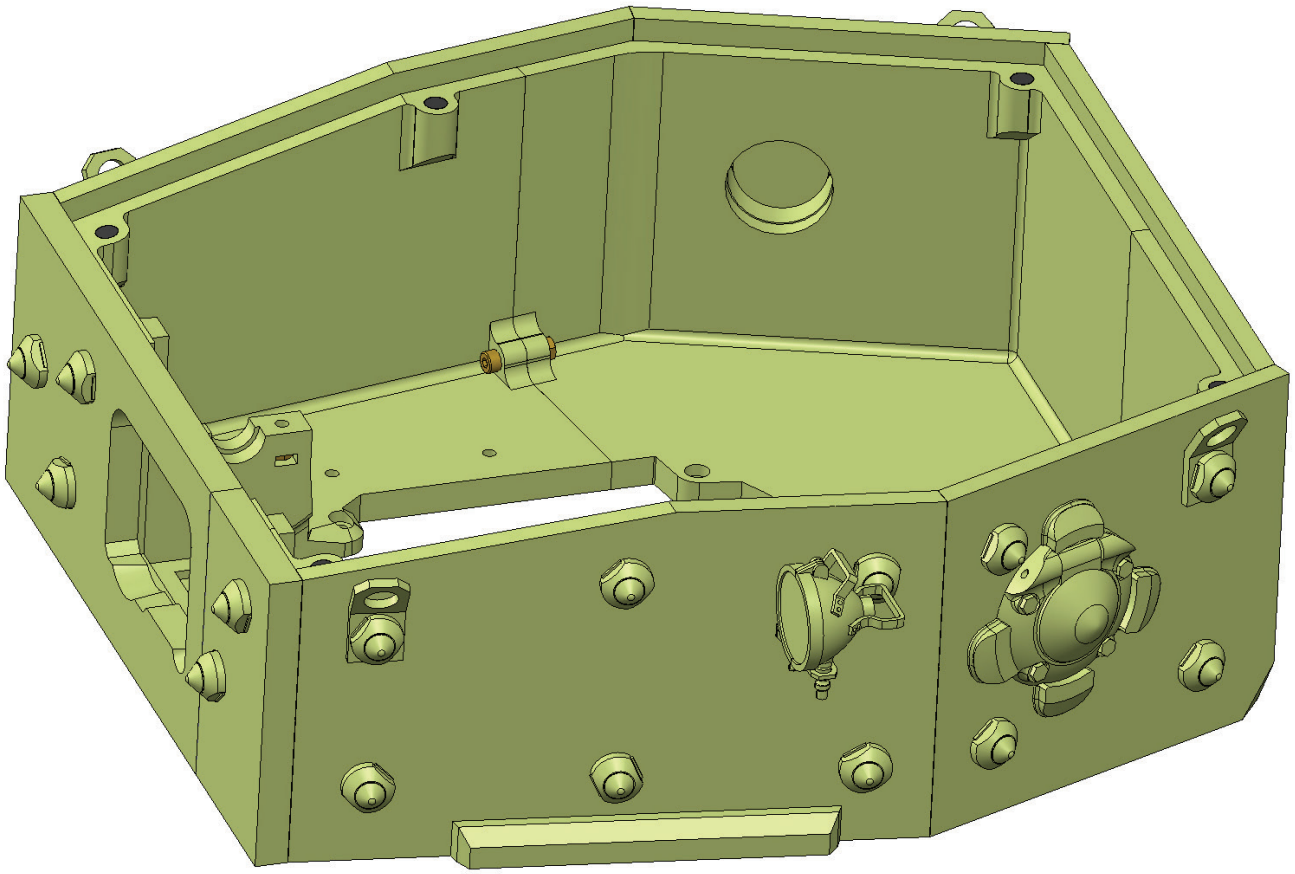

3D PRINTED PARTS:	04-01A (1x), 04-01B (1x), 04-01C (1x), 04-01D (1x), 04-02A (1x), 04-02B (5x), 04-02C (1x), 04-03A (1x), 04-03B (3x), 04-03C (1x), 04-03D (1x), 04-04A (1x), 04-04B (5x), 04-04C (1x), 04-05A (1x), 04-05B (3x), 04-05C (1x), 04-05D (1x), 04-06A (1x), 04-06B (5x), 04-06C (1x), 04-07A (1x), 04-07B (6x), 04-07C (1x), 04-08A (1x), 04-08B (1x), 04-08C (1x), 04-08D (1x), 04-08E (1x), 04-08F (1x), 04-09 (1x).
OPTIONAL 3D PRINTED PARTS:	04-01AB (1x), 04-01CD (1x), 04-01ABCD (1x), 04-02AB (1x), 04-02ABC (1x), 04-03AB (1x), 04-03ABC (1x), 04-03ABCD (1x), 04-04AB (1x), 04-04ABC (1x), 04-05AB (1x), 04-05ABC (1x), 04-05ABCD (1x), 04-06AB (1x), 04-06AC (1x), 04-06BC (1x), 04-06ABC (1x), 04-07A_alt (1x), 04-07A_no_handles (1x), 04-07AC_alt (1x), 04-07AC_no_handles (1x), 04-07ABC_alt (1x), 04-07ABC_no_handles (1x), 04-07AC (1x), 04-07ABC (1x), 04-08ABCD (1x).
NON-PRINTED PARTS:	M4 nut (11x), M4x20mm screw (5x), magnets -diameter 7mm -lenght 6mm (5x), wire -diameter 2mm -lenght 35mm (2x), LED 5mm -warm white (1x),

Assembly 04 - Lower Turret

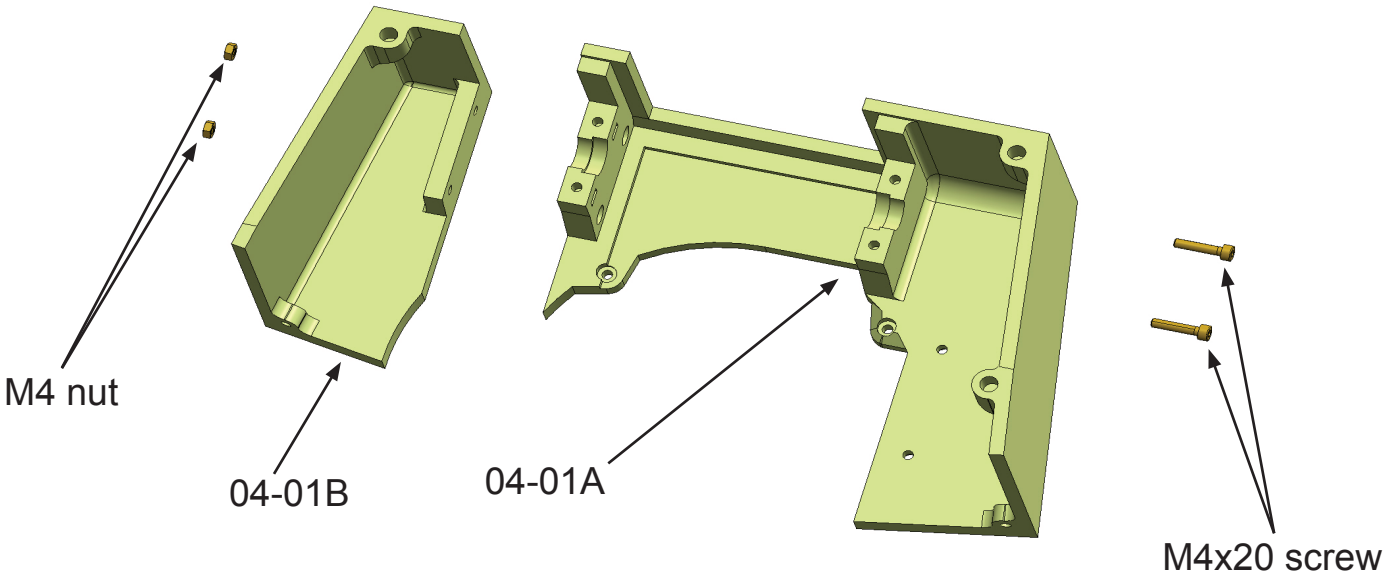

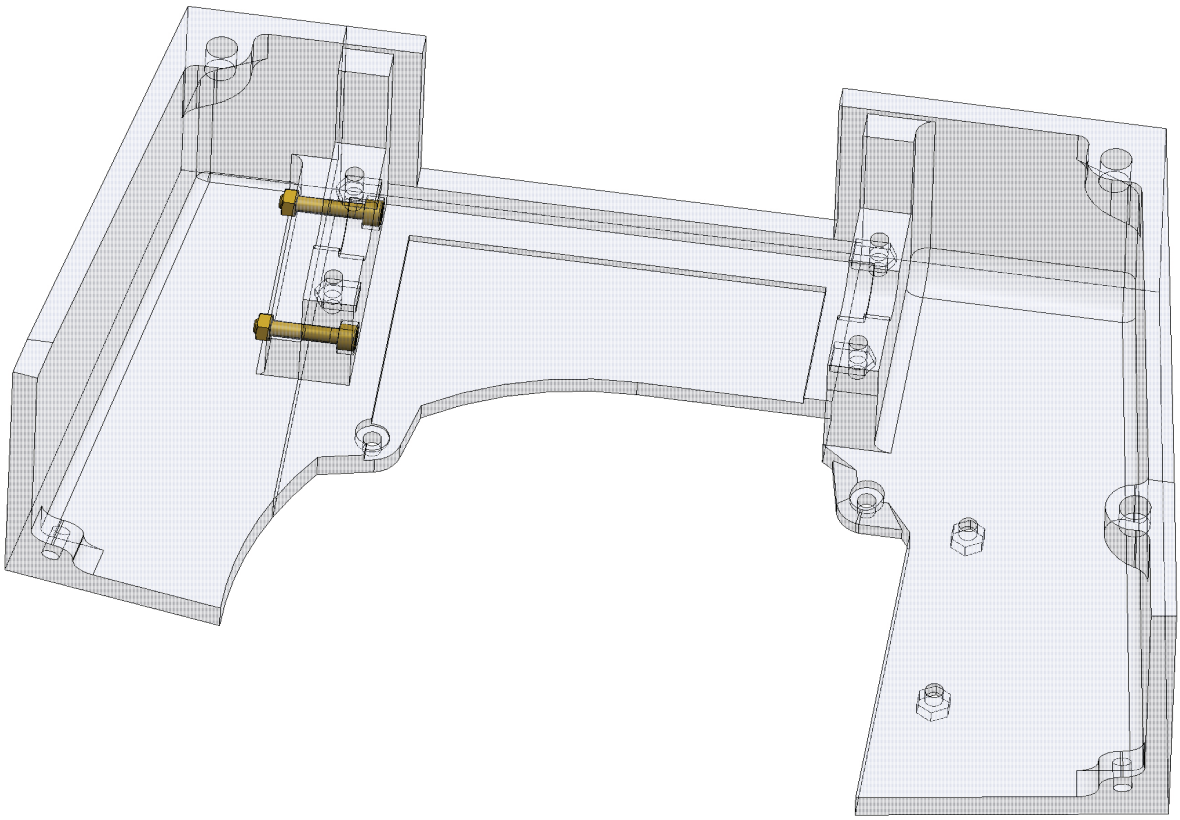

Glue parts 04-01A and 04-01B.
Insert two M4 nuts, use two M4x20 screws.
These help with precise gluing and strengthen the structure.
SKIP THIS STEP, IF YOU HAVE BIG PRINTER (USE PART 04-01ABCD).

Assembly 04 - Lower Turret

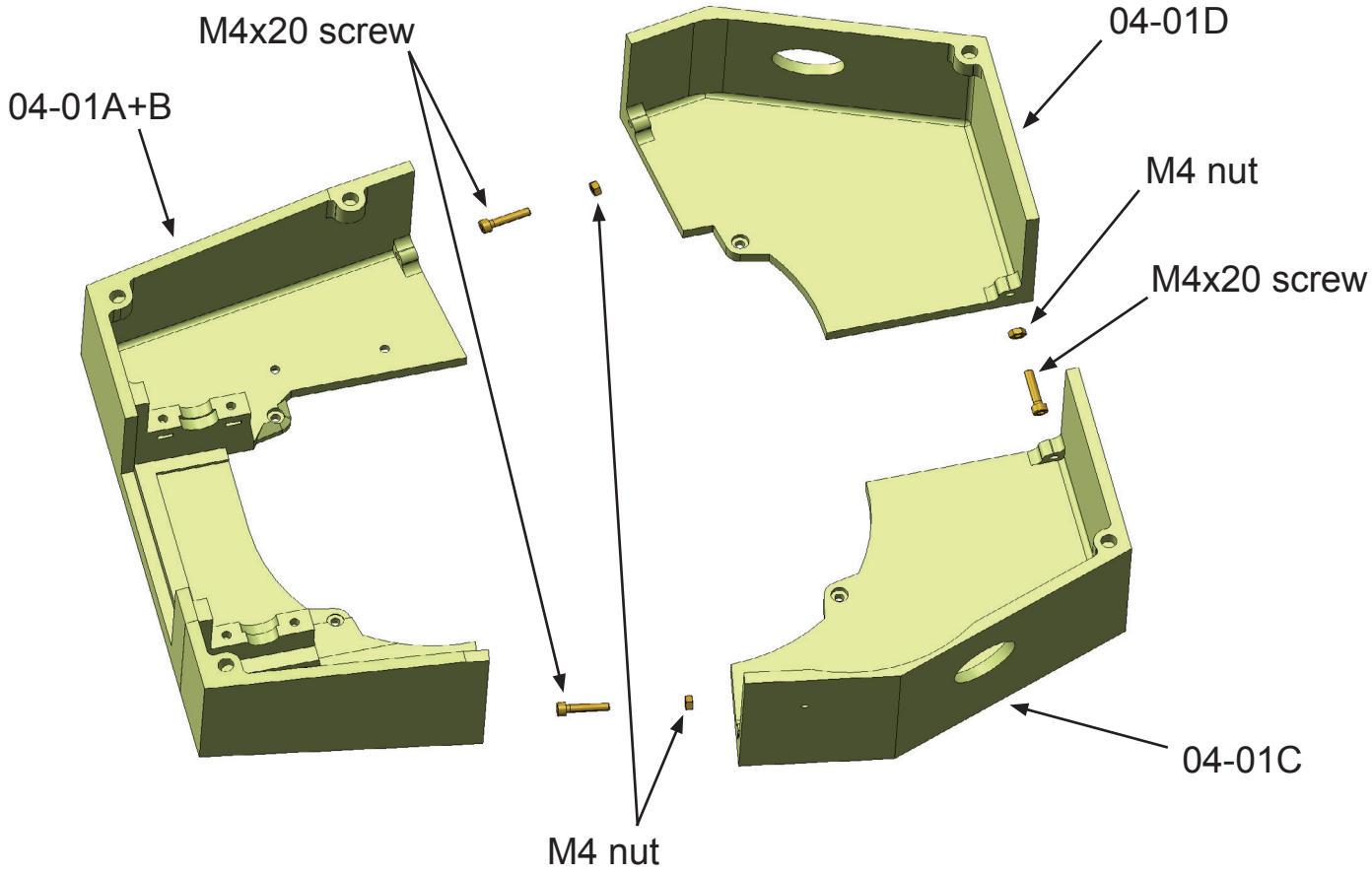

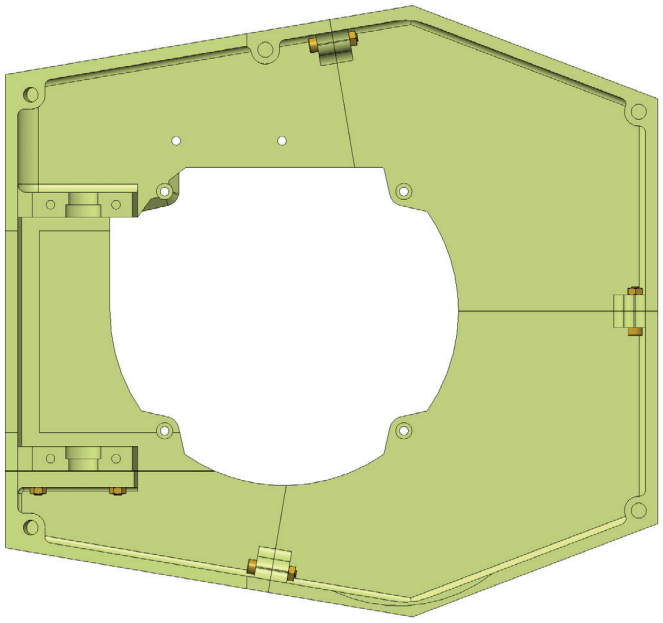

Glue parts 04-01A+B, 04-01C and 04-01D.
Use 3 M4x20 screws and 3 M4 nuts.
SKIP THIS STEP, IF YOU HAVE BIG PRINTER (USE PART 04-01ABCD).

Assembly 04 - Lower Turret

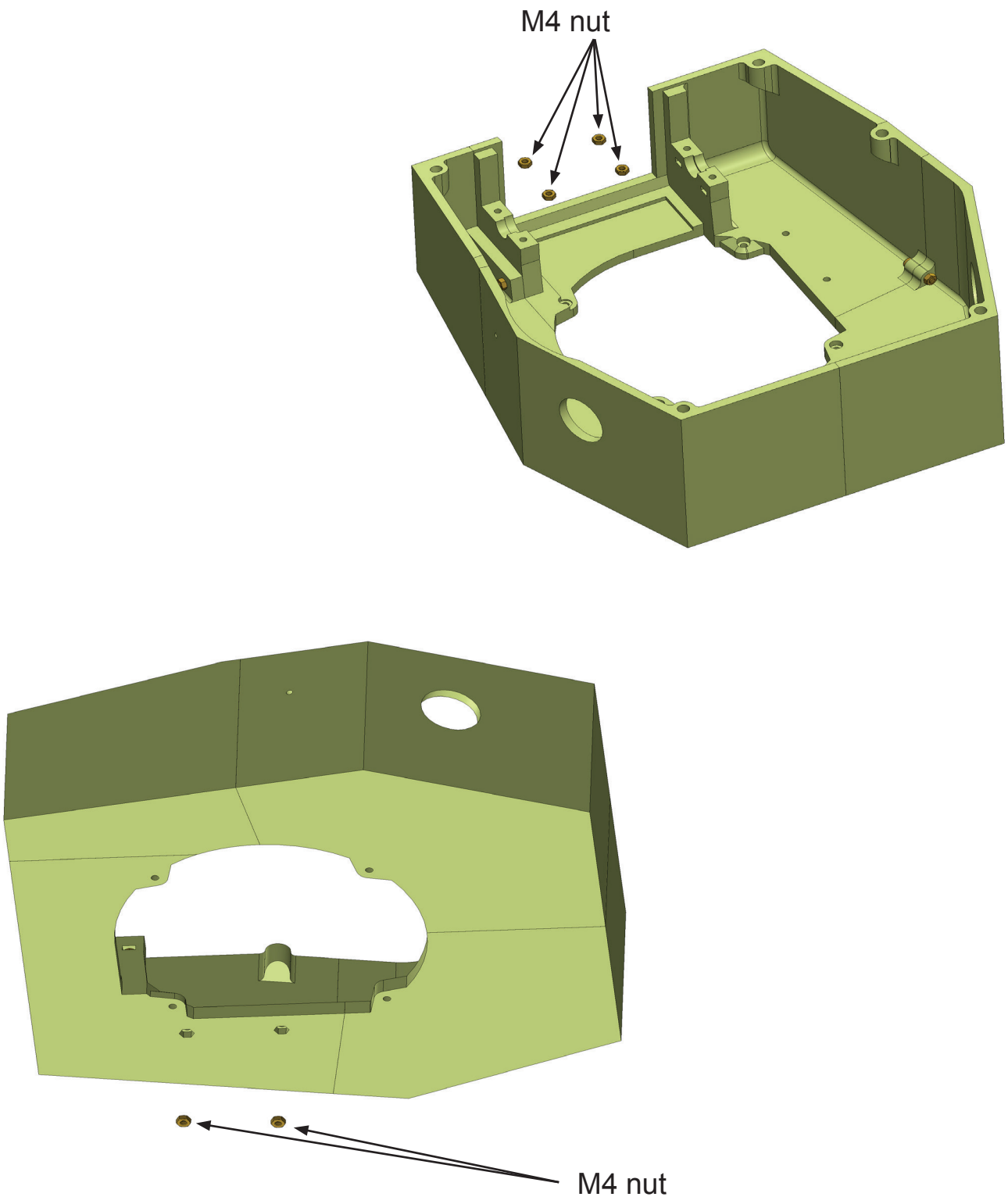

Insert 6 M4 nuts into part 04-01 (A+B+C+D).

Assembly 04 - Lower Turret

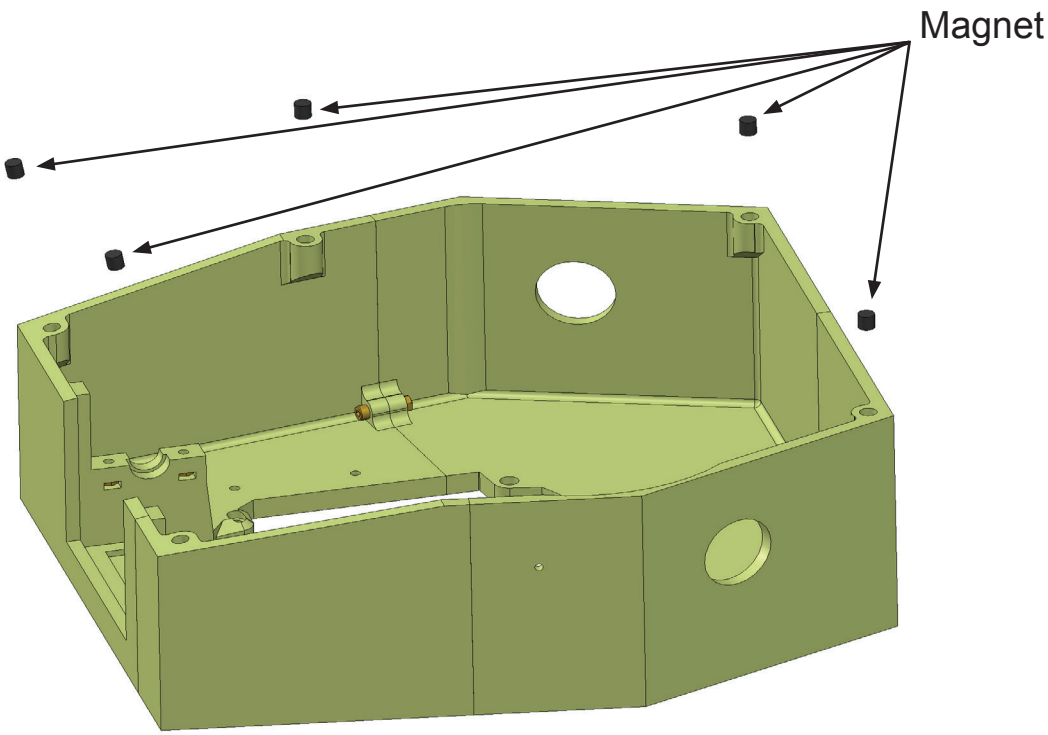

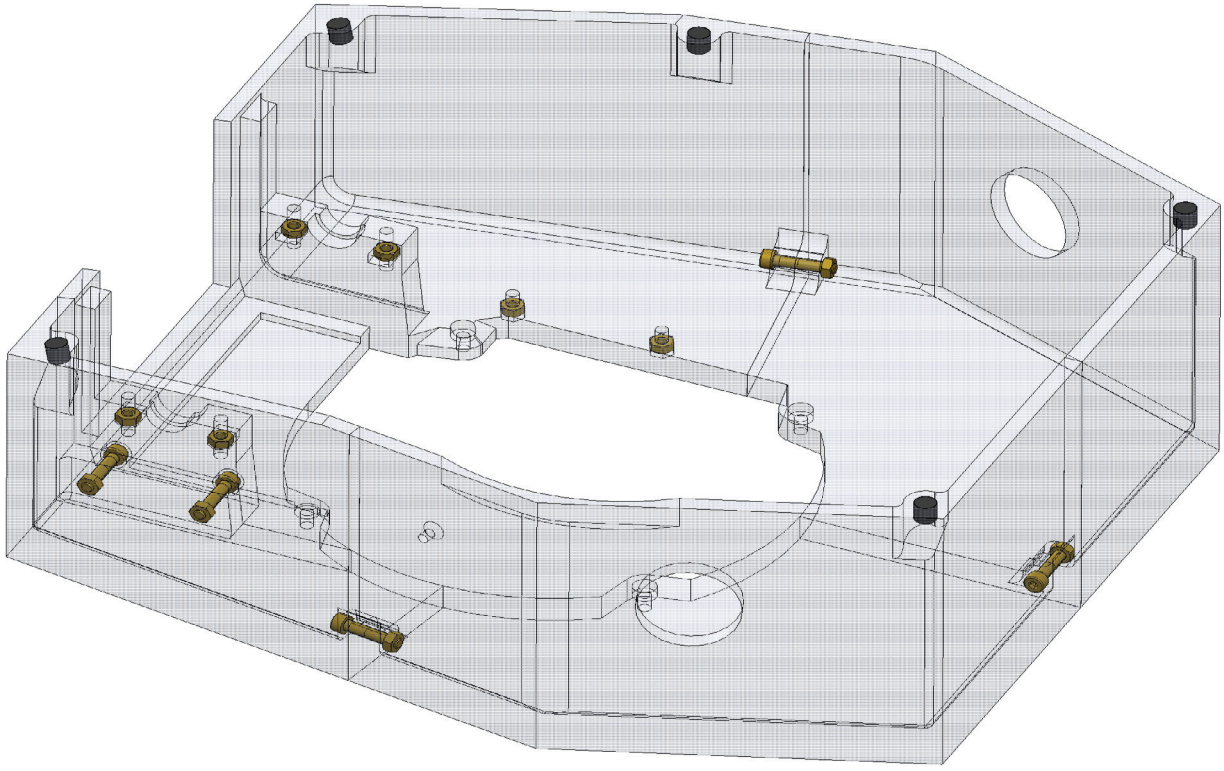

Glue 5 magnets with a diameter of 7mm and a length of 6mm.
In the figure below - a view of the installed magnets, screws and nuts.

Assembly 04 - Lower Turret

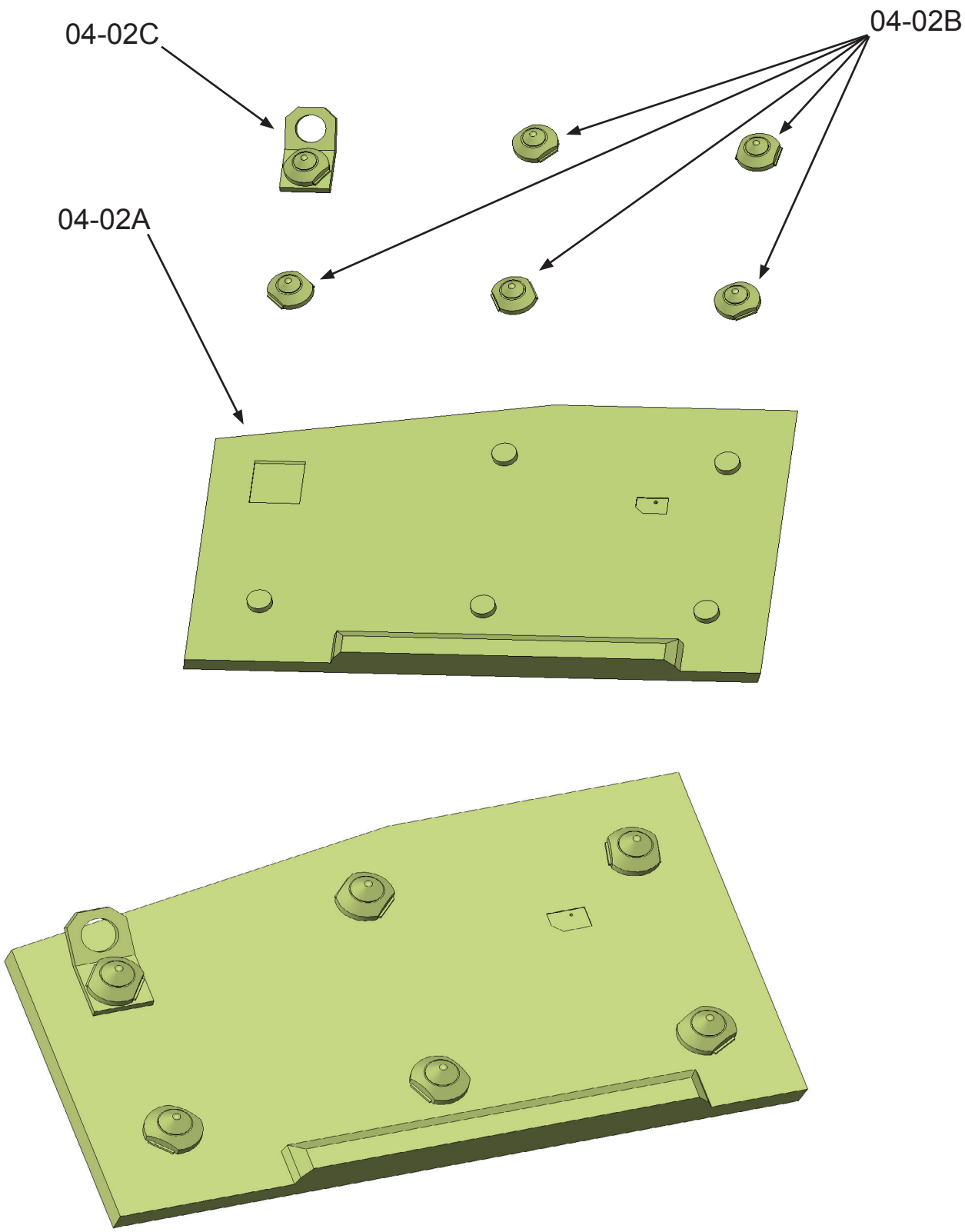

Glue parts 04-02A, 04-02B and 04-02C together.
You can skip the step if you are printing part 04-02ABC.

Assembly 04 - Lower Turret

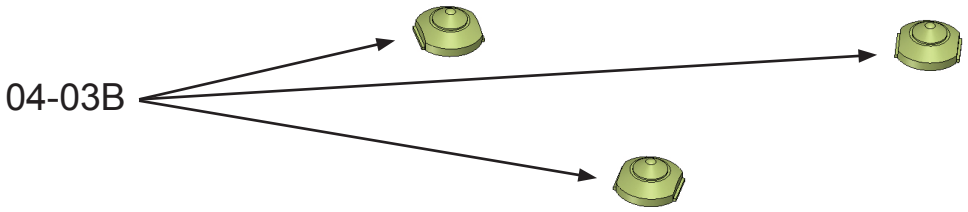

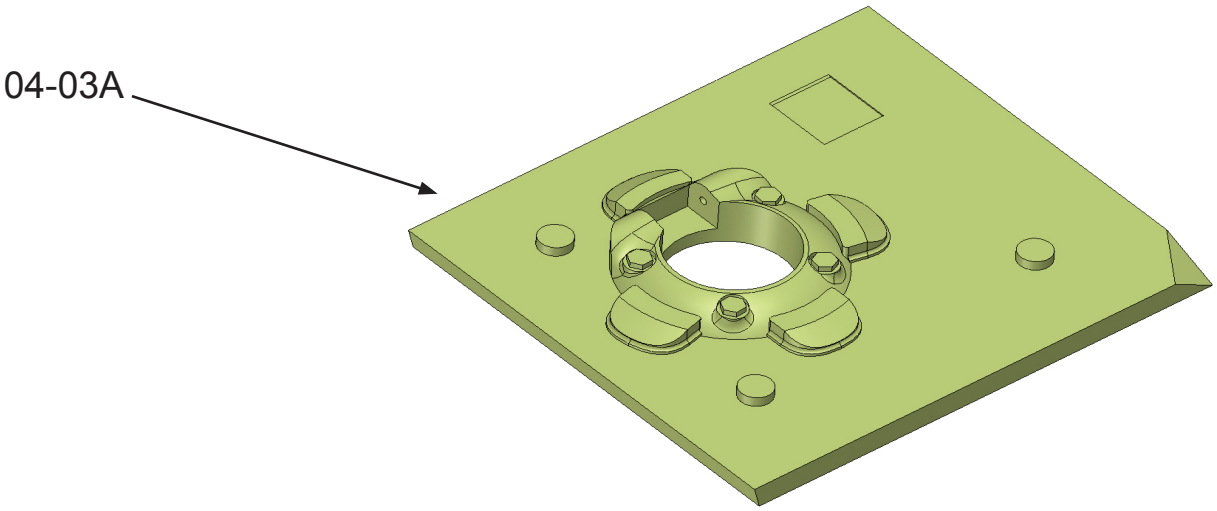

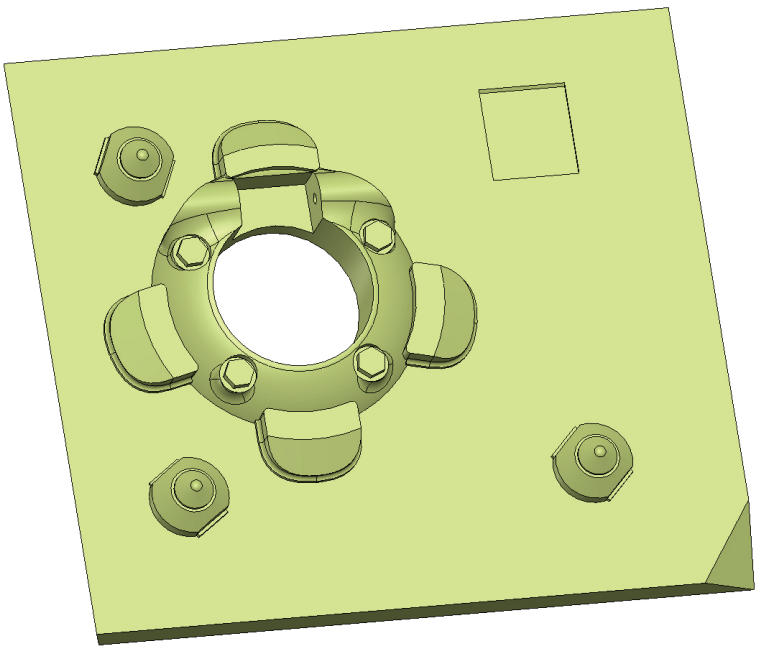

Glue parts 04-03A and 04-03B together.
You can skip the step if you are printing part 04-03AB or 04-03ABC.

Assembly 04 - Lower Turret

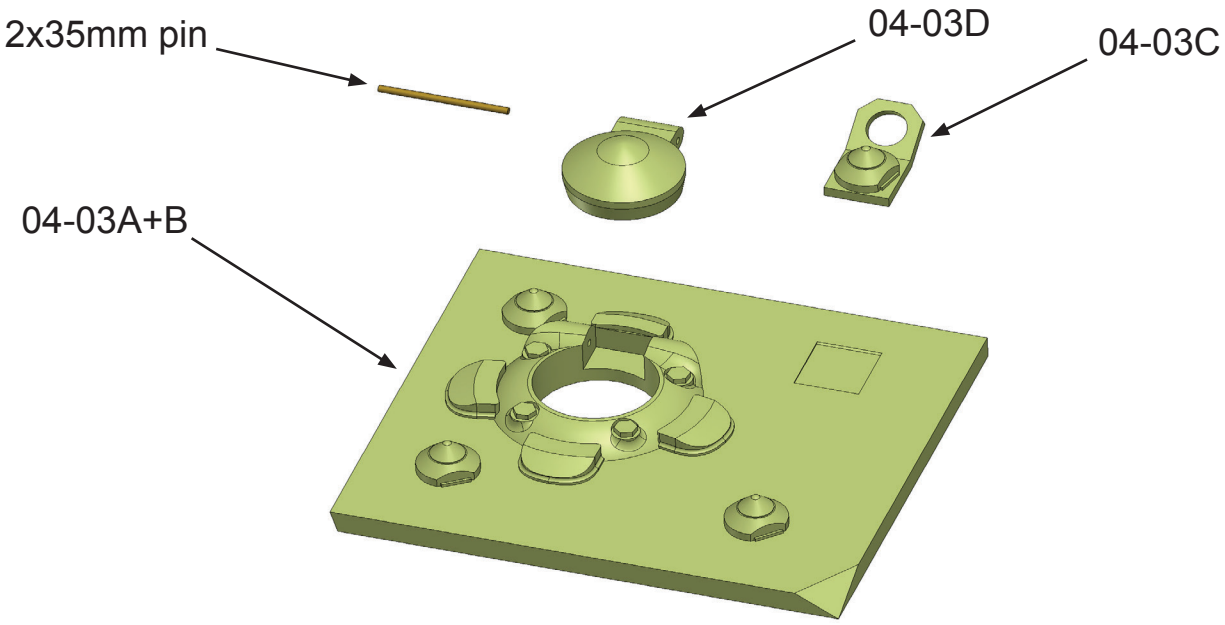

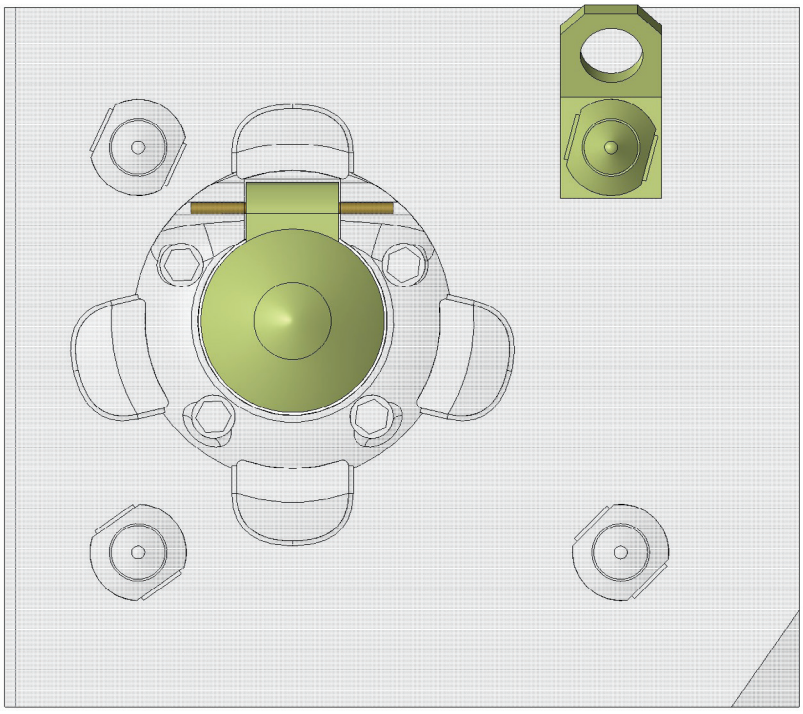

Glue parts 04-03A+B and 04-03C together.
You can skip the step if you are printing part 04-03ABC.
Join parts 04-03A and 04-03D with a wire with
a diameter of 2mm and a length of 35mm.
You can also skip this step and print different versions of the part (04-03ABCD).

Assembly 04 - Lower Turret

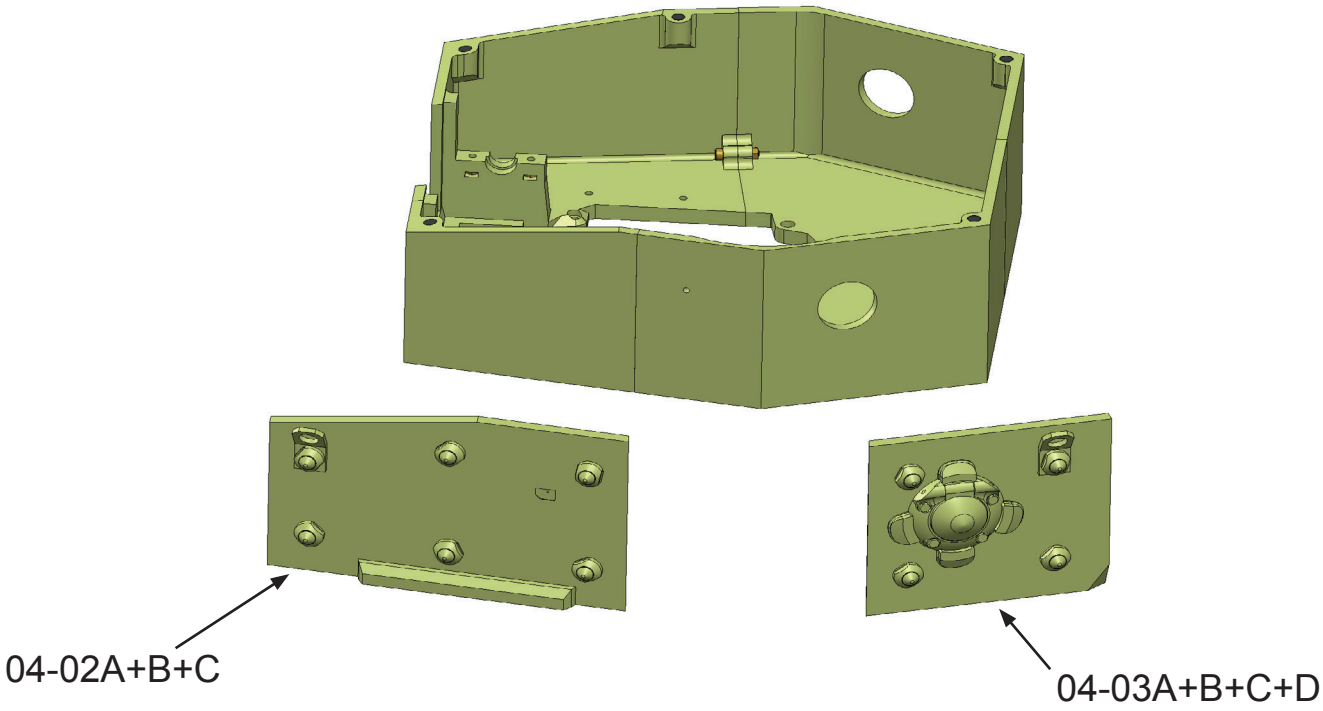

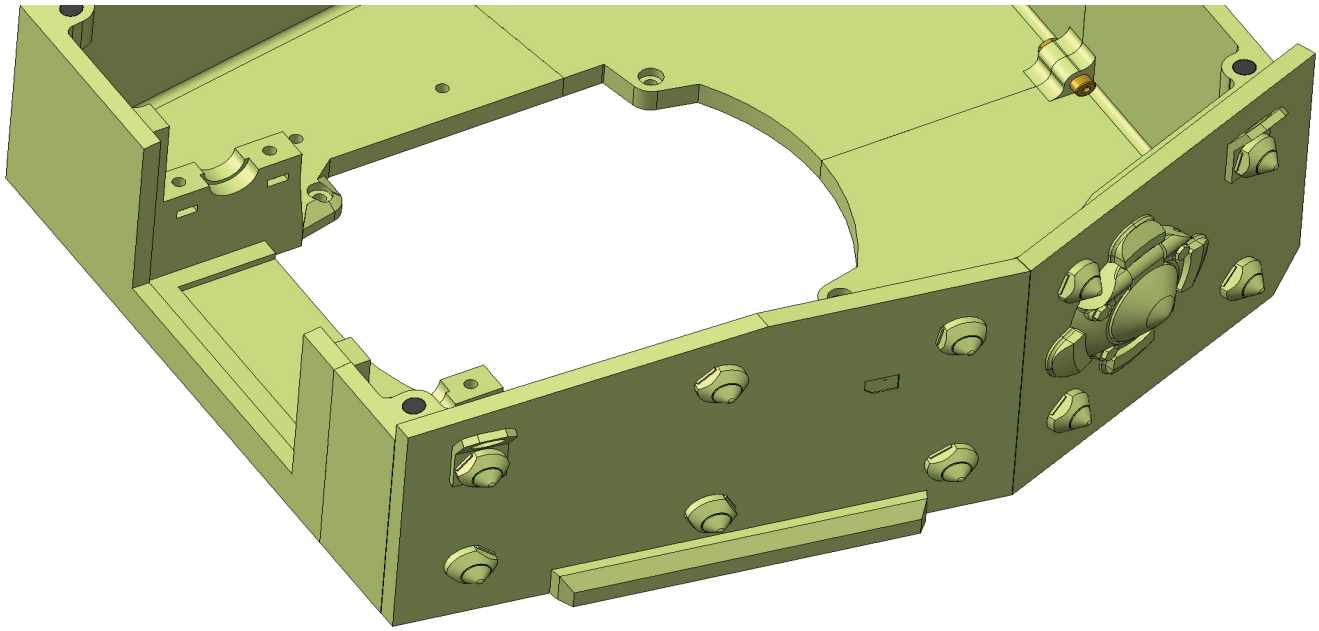

Glue parts 04-02A+B+C and 04-03A+B+C+D to part 04-01.
The edge of part 04-02A must be aligned with the front surface of part 04-01
(see lower figure on page 236).

Assembly 04 - Lower Turret

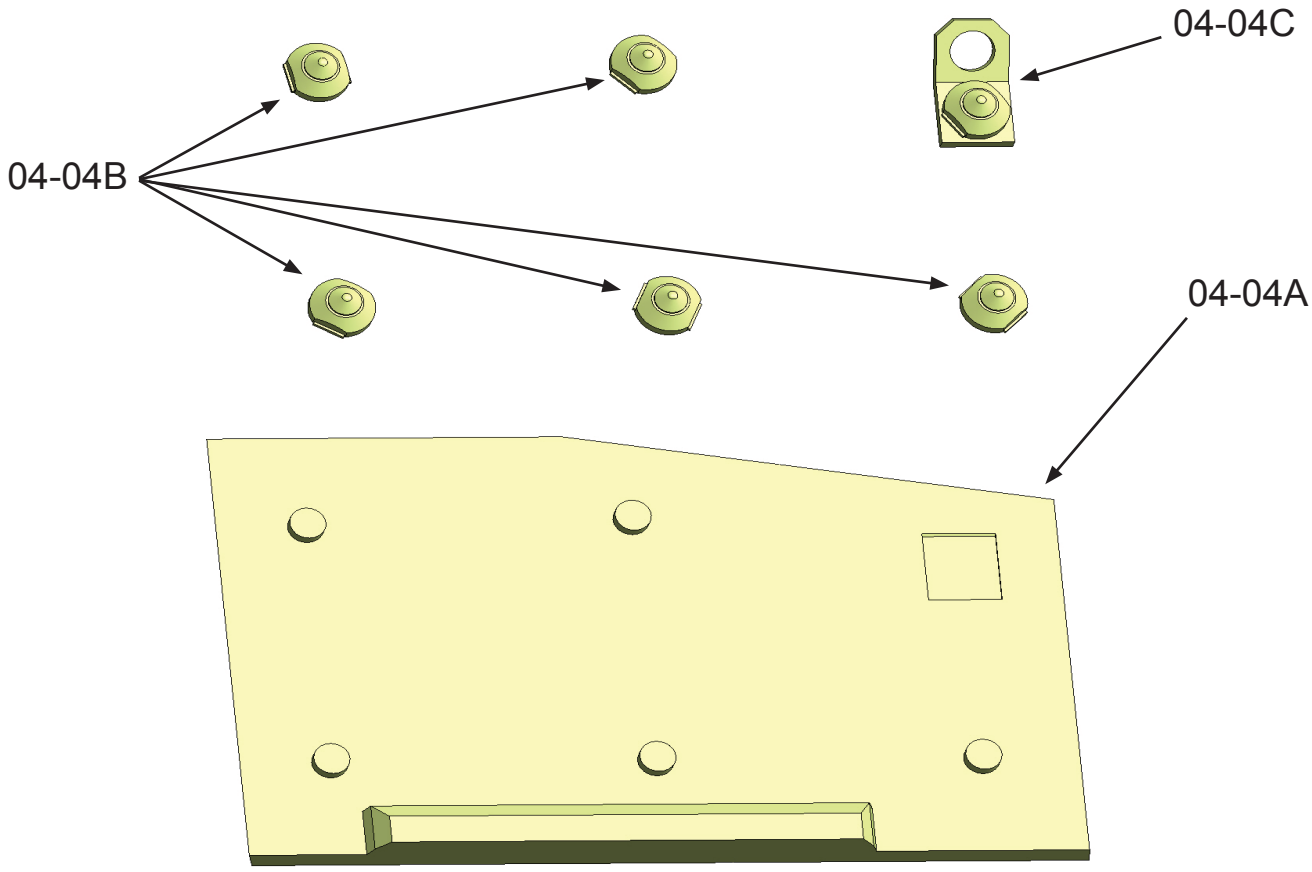

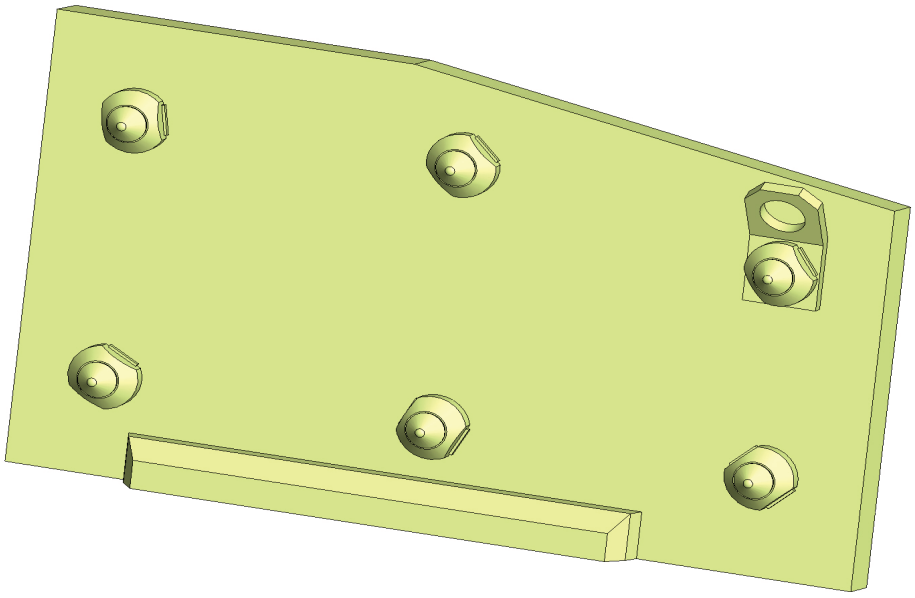

Glue parts 04-04A, 04-04B and 04-04C together.
You can skip the step if you are printing part 04-04ABC.

Assembly 04 - Lower Turret

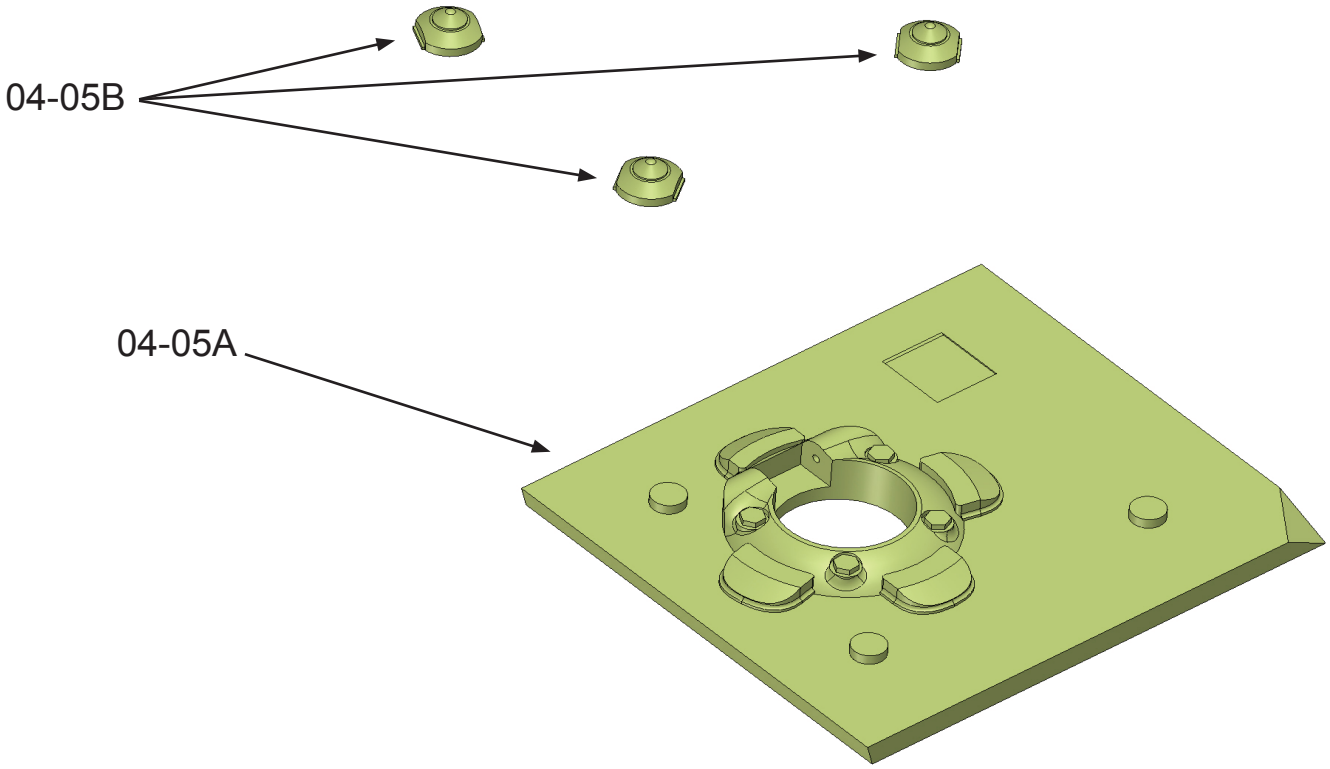

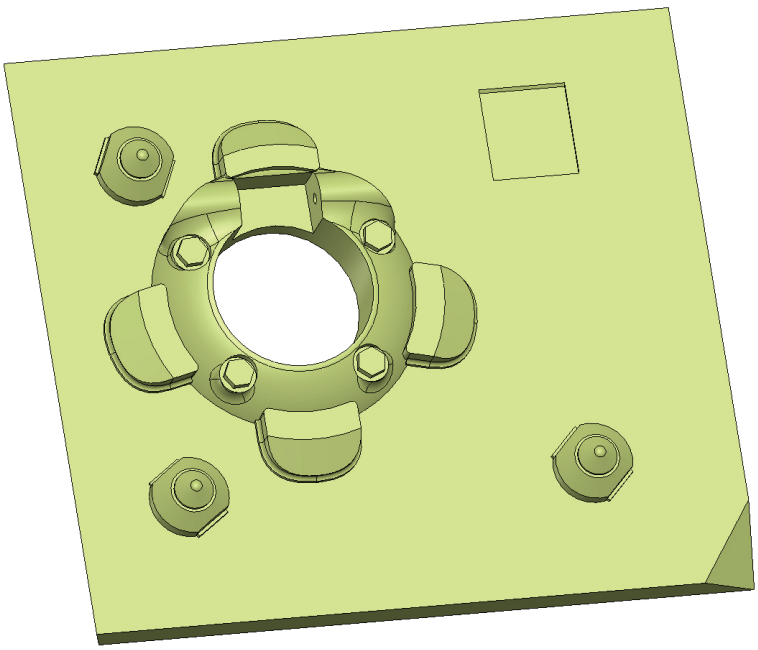

Glue parts 04-05A and 04-05B together.
You can skip the step if you are printing part 04-05AB or 04-05ABC.

Assembly 04 - Lower Turret

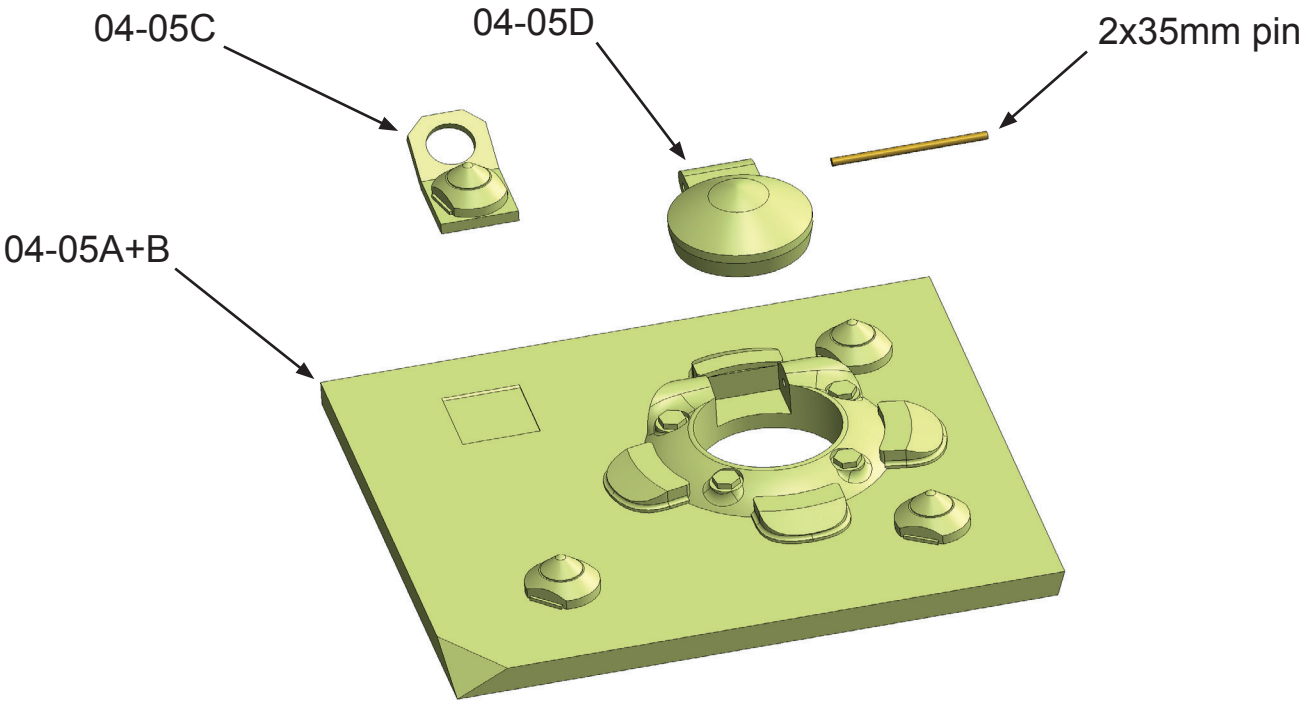

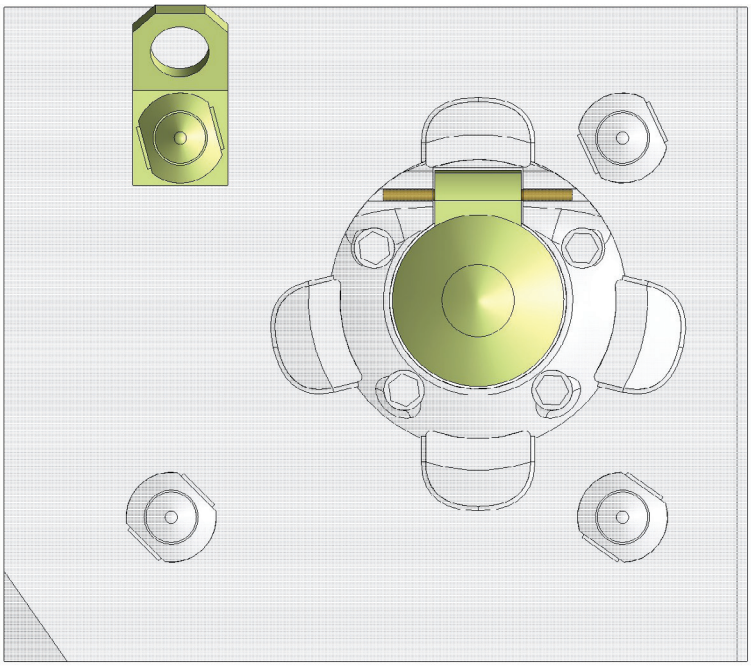

Glue parts 04-05A+B and 04-05C together.
You can skip the step if you are printing part 04-05ABC.
Join parts 04-05A and 04-05D with a wire with
a diameter of 2mm and a length of 35mm.
You can also skip this step and print different versions of the part (04-05ABCD).

Assembly 04 - Lower Turret

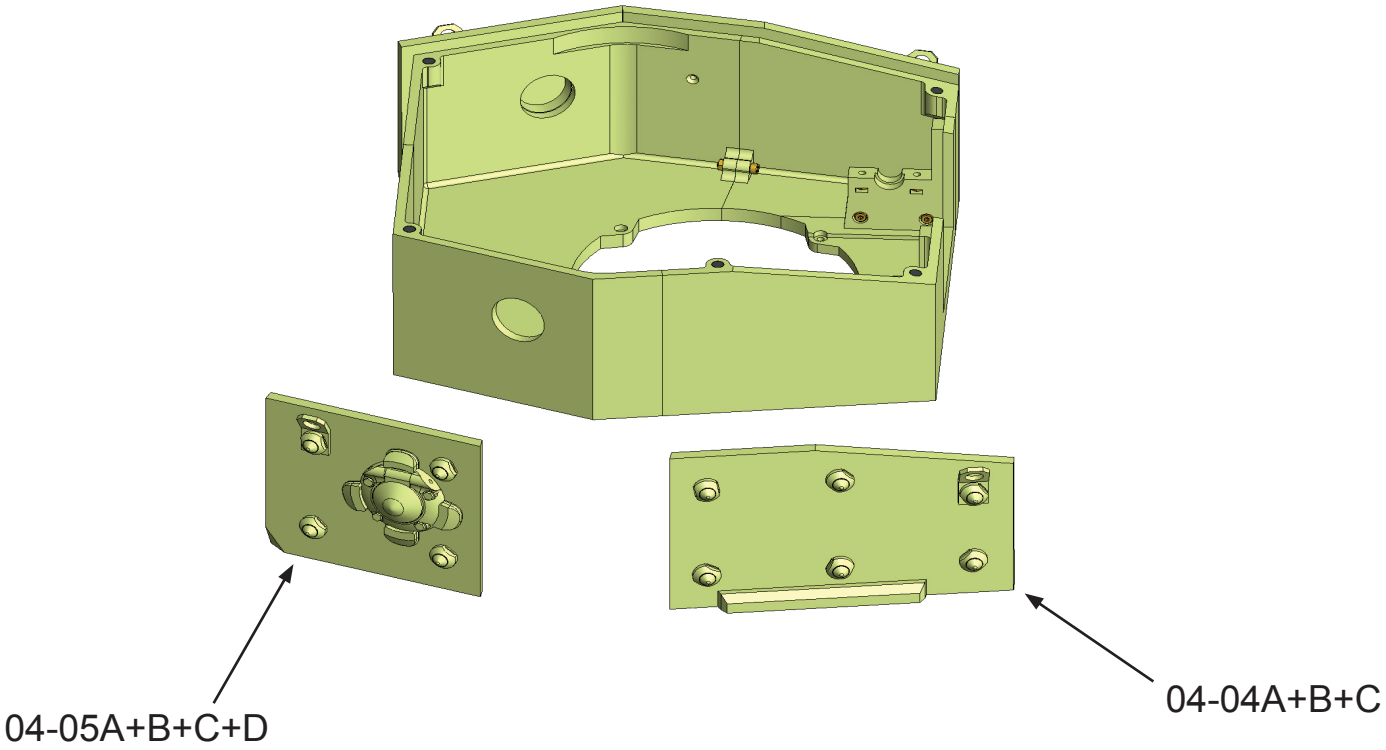

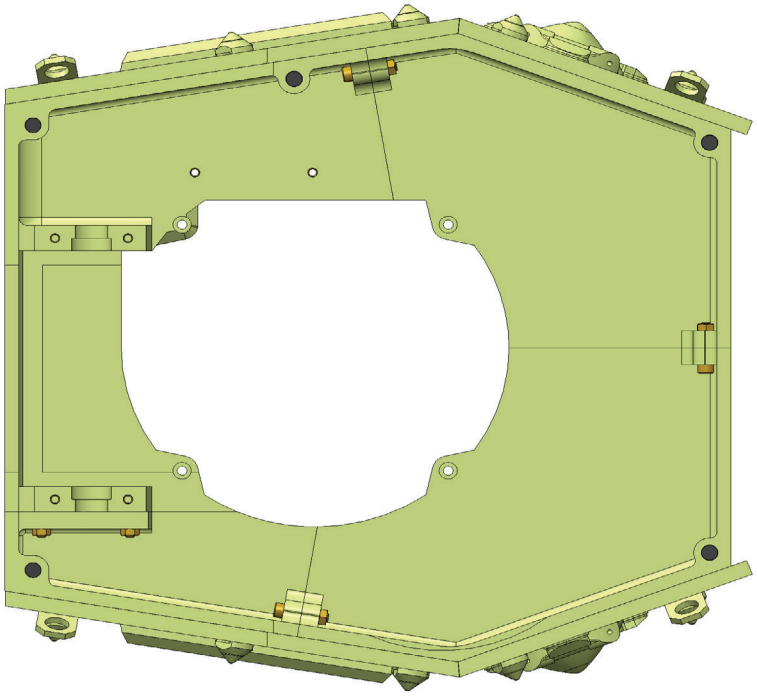

Glue parts 04-04A+B+C and 04-05A+B+C+D to part 04-01.
The edge of part 04-04A must be aligned with the front surface of part 04-01.

Assembly 04 - Lower Turret

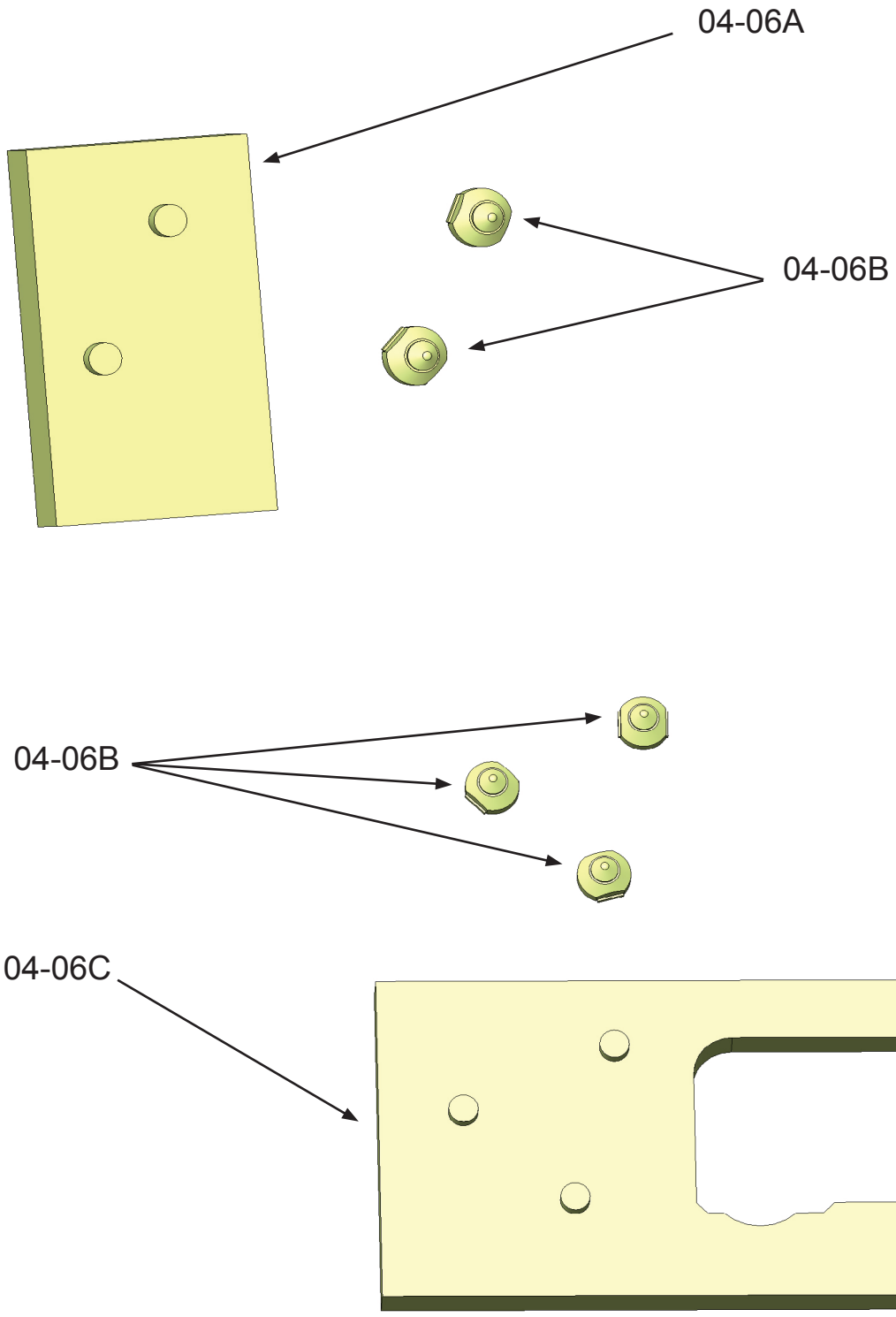

Glue parts 04-06A and 04-06B together. Glue parts 04-06B and 04-06C together.
You can skip the step if you are printing part 04-06AB, 04-06AC or 04-06ABC.

Assembly 04 - Lower Turret

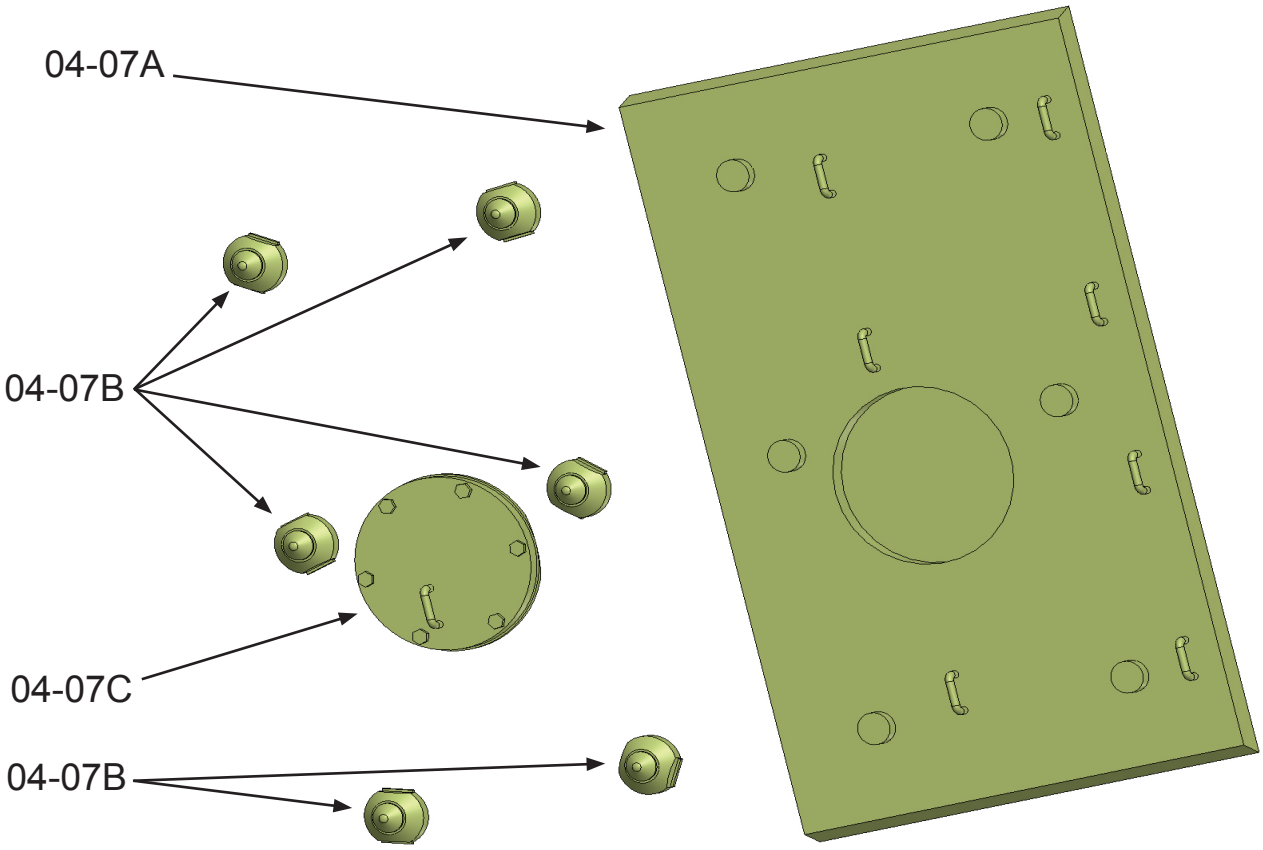

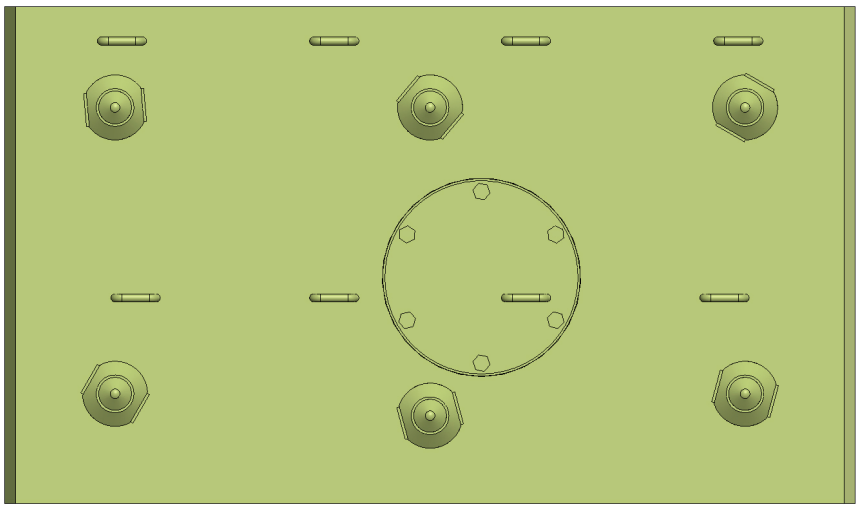

Glue parts 04-07A, 04-07B and 04-07C together.
You can skip the step if you are printing part 04-07AC or 04-07ABC.

Assembly 04 - Lower Turret

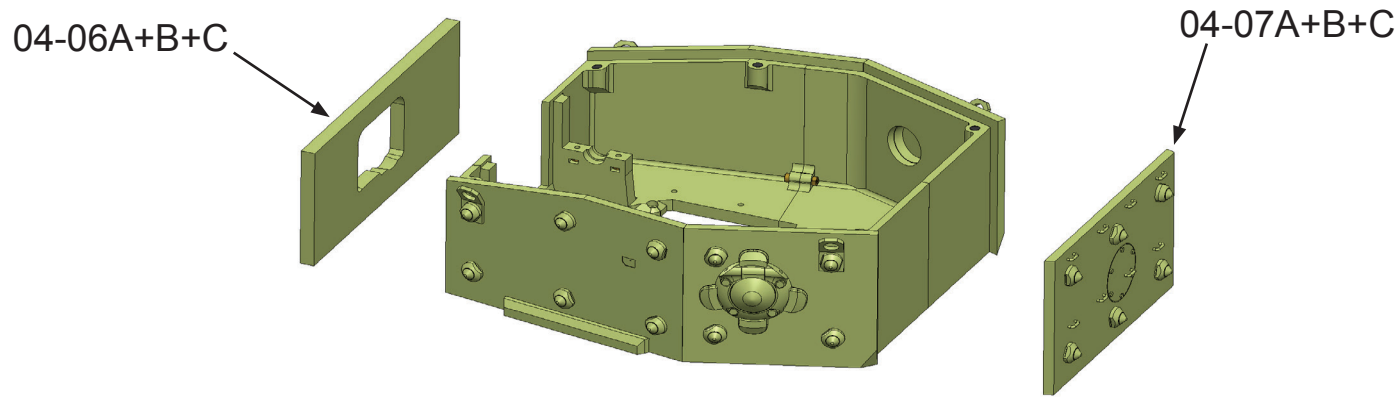

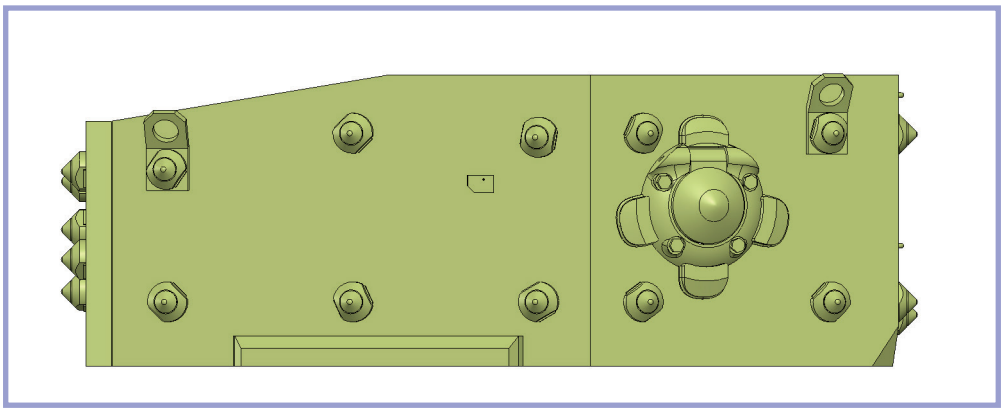

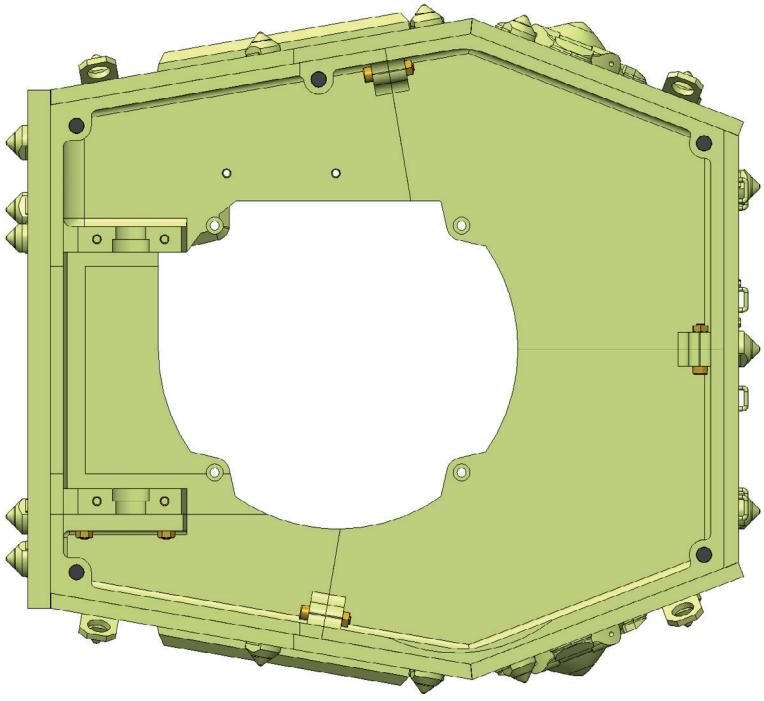

Glue parts 04-06A+B+C and 04-07A+B+C to part 04-01.

Assembly 04 - Lower Turret

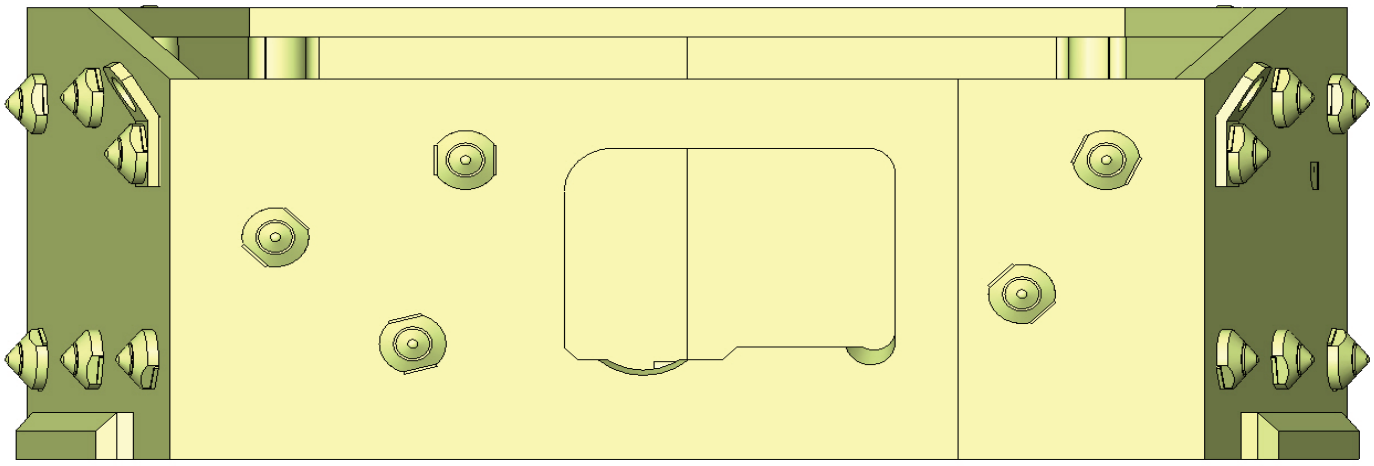

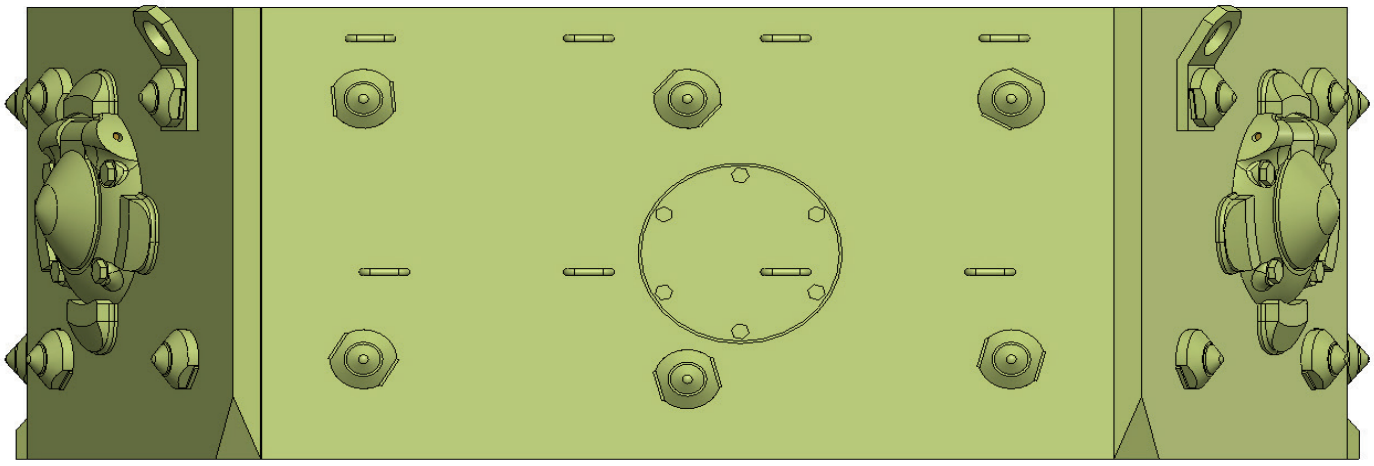

Auxiliary views of the parts 04-06A+B+C and 04-07A+B+C.

Assembly 04 - Lower Turret

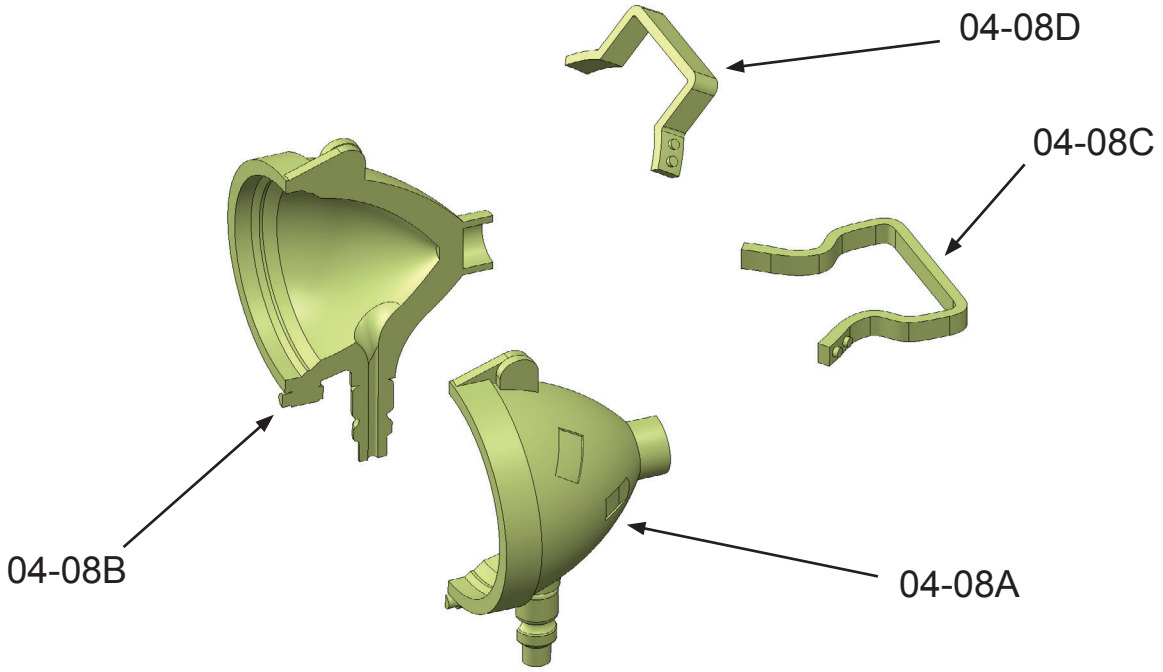

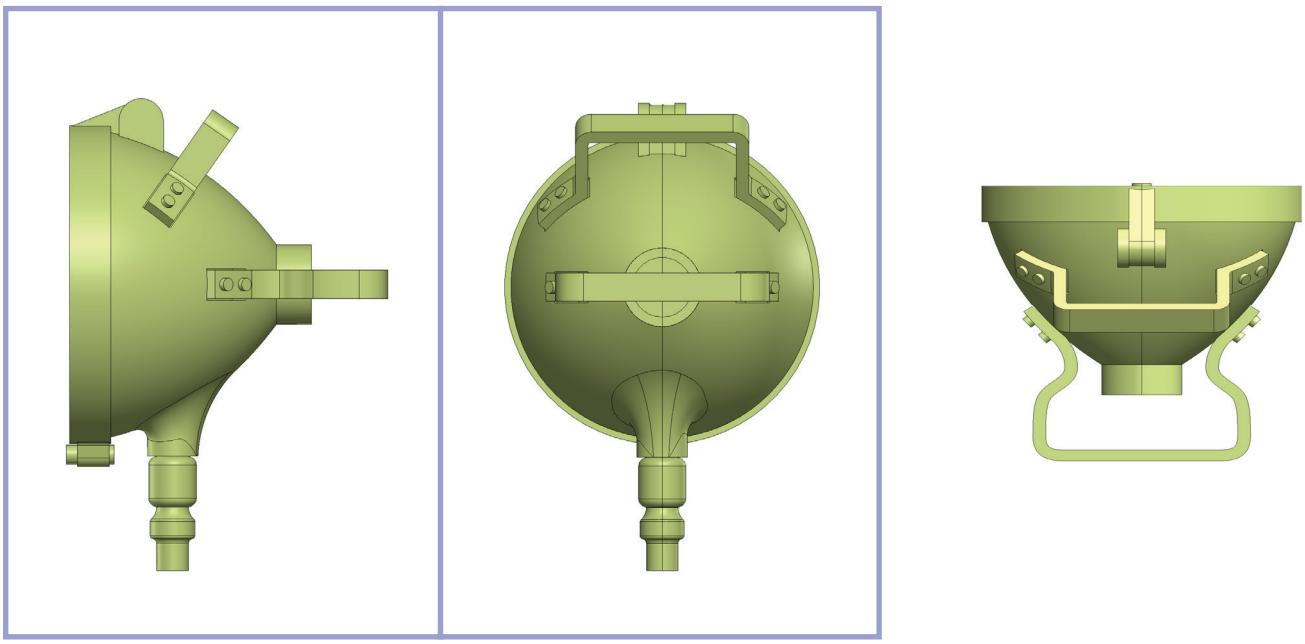

Glue parts 04-08A, 04-08B, 04-08C and 04-08D together.
You can skip this step if you are printing part 04-08ABCD.

Assembly 04 - Lower Turret

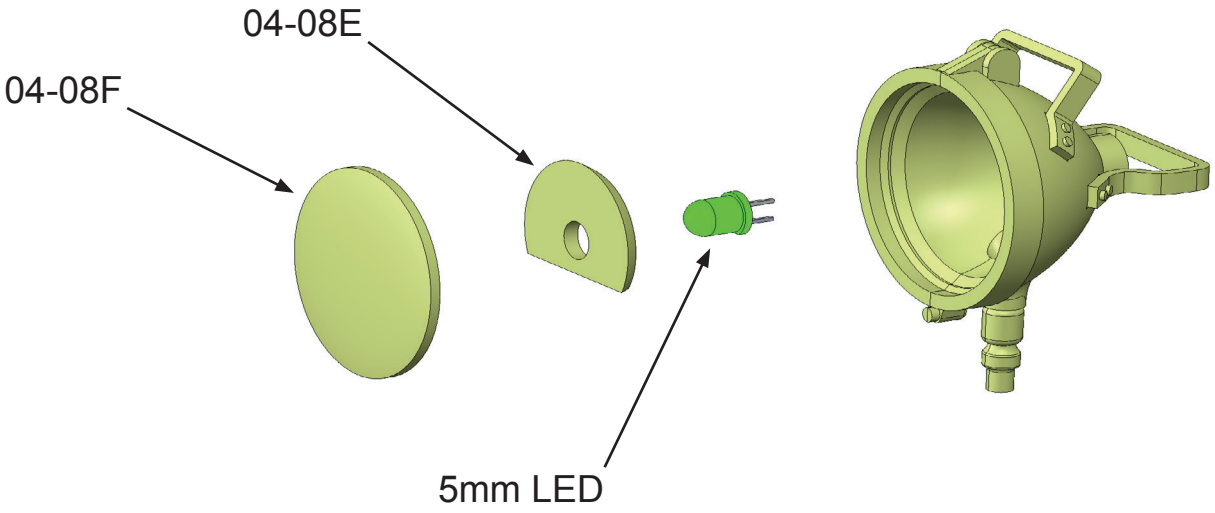

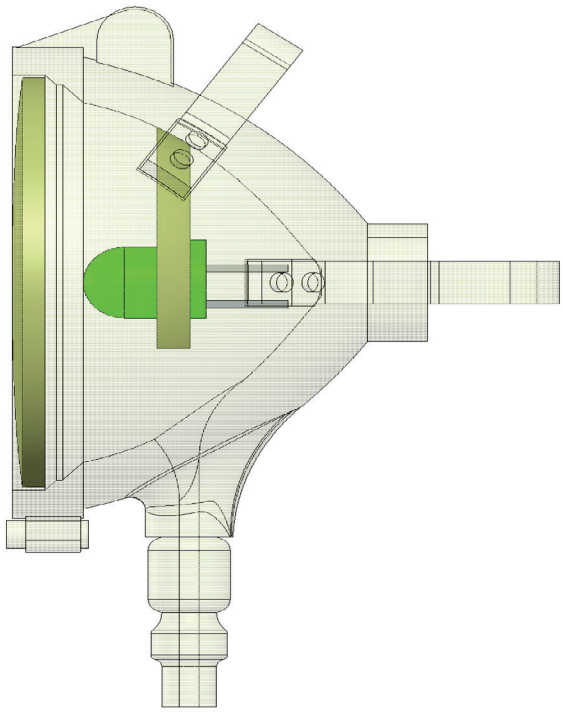

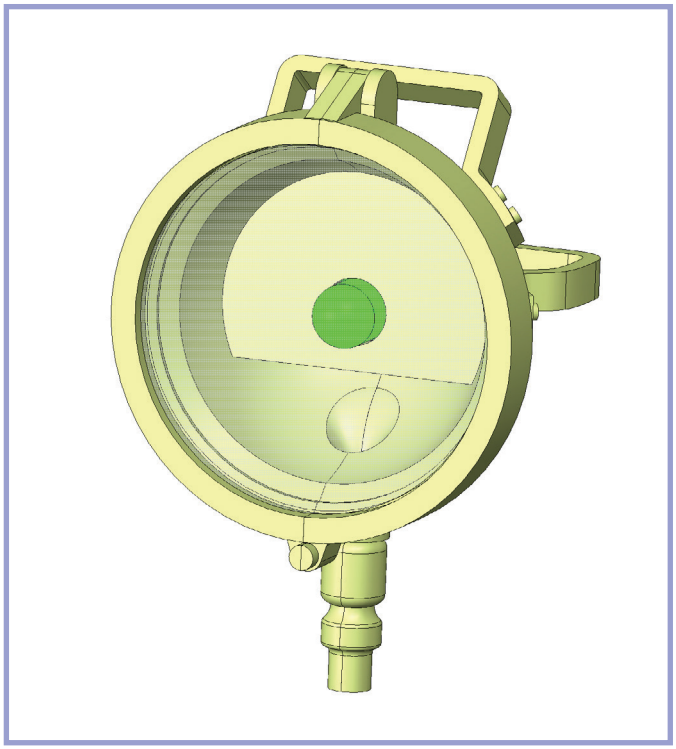

Solder the wires to the 5mm LED diode according to the documentation.
We recommend wires with a maximum diameter of 0.5 mm.
The installation hole for the cables has a diameter of 1.2 mm.
Insert the prepared and tested diode into part 04-08E.
Route the wires through the installation hole.
Glue parts 04-08E and 04-08F.

Assembly 04 - Lower Turret

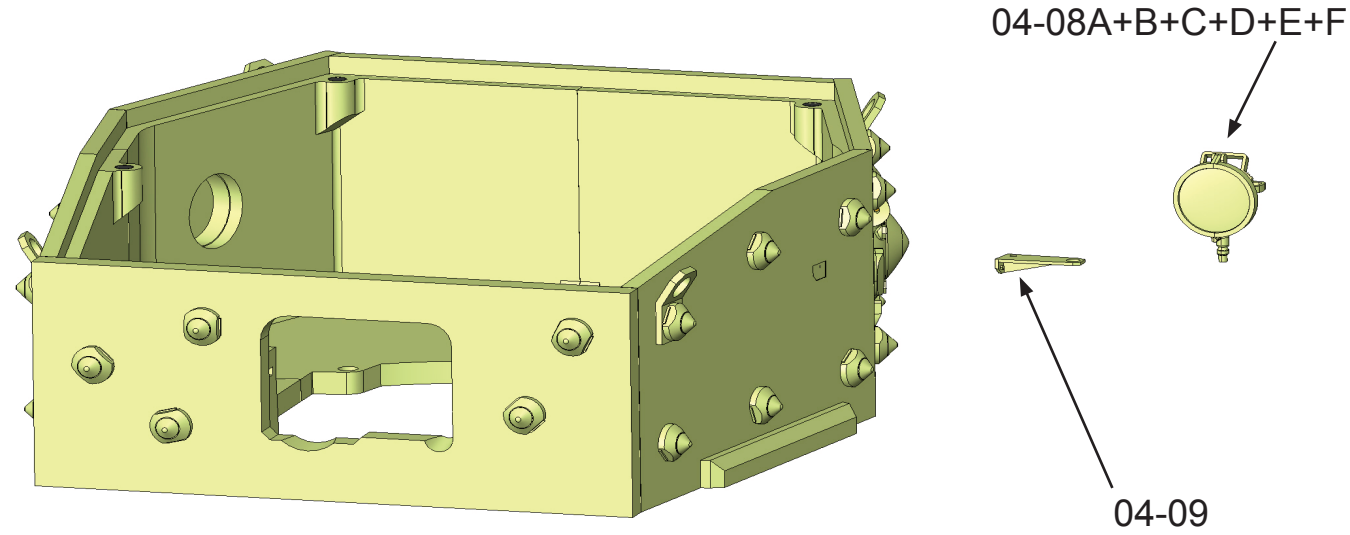

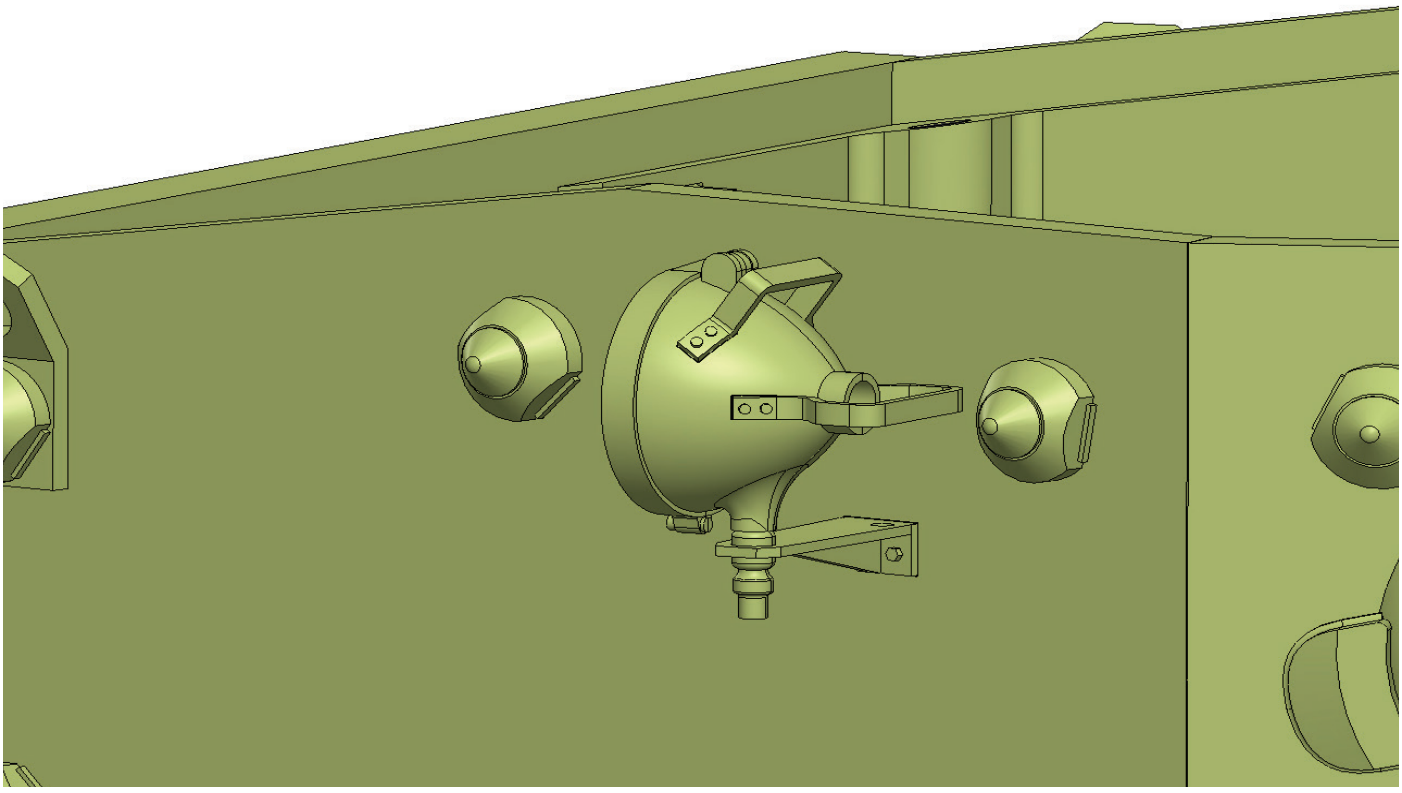

Glue the parts assembly 04-08A+B+C+D+E+F to the turret using part 04-09.
You can push the wire through the hole in the back of part 04-09.

Assembly 04 - Lower Turret

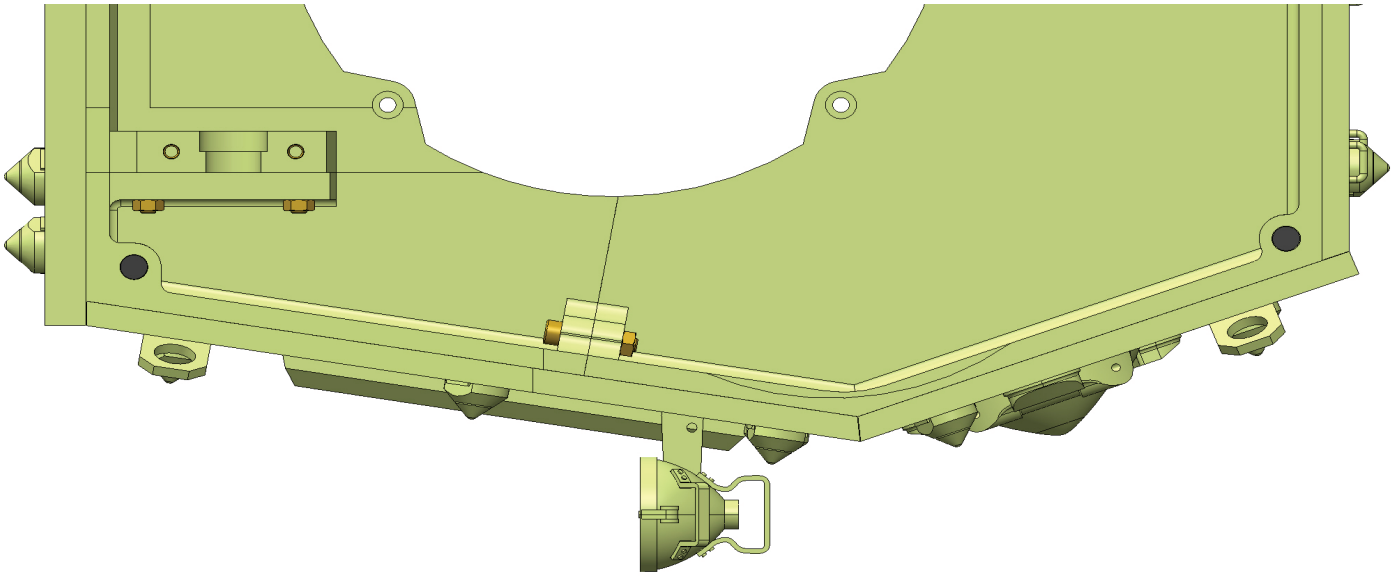

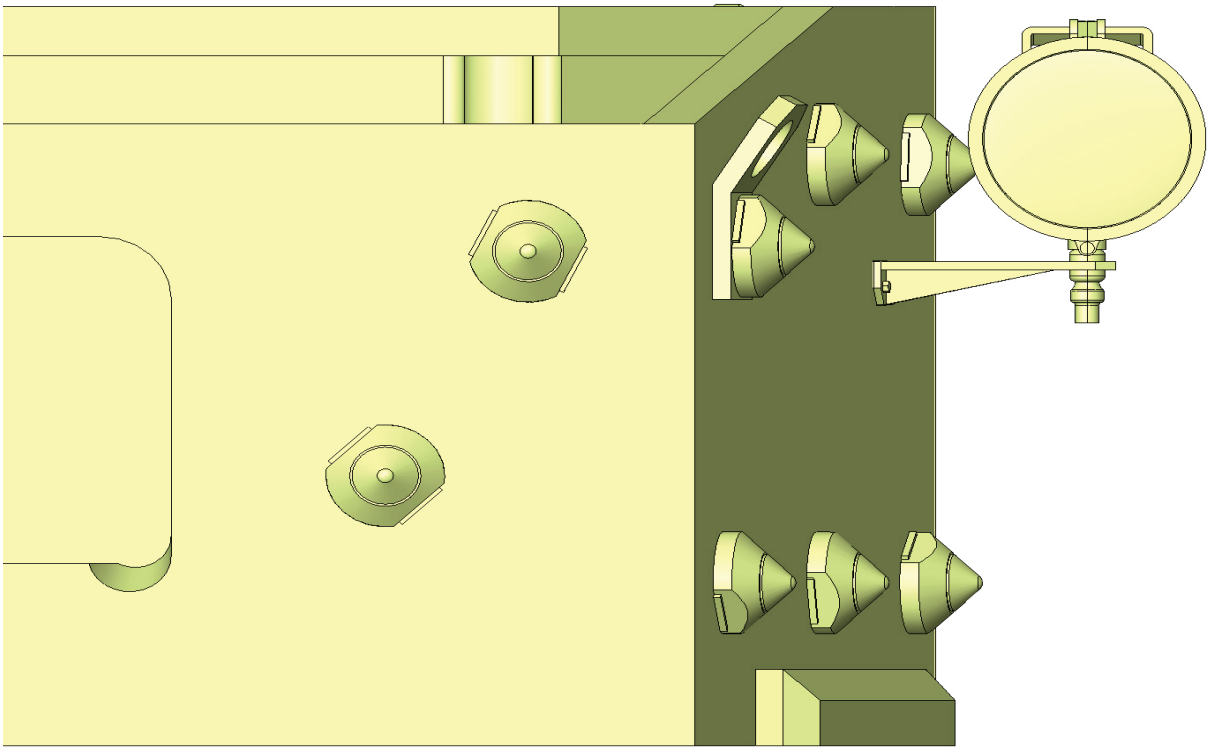

Auxiliary views for gluing parts 04-08A+B+C+D+E+F.

Assembly 04 - Lower Turret

Assembly 05 - Top of the Turret

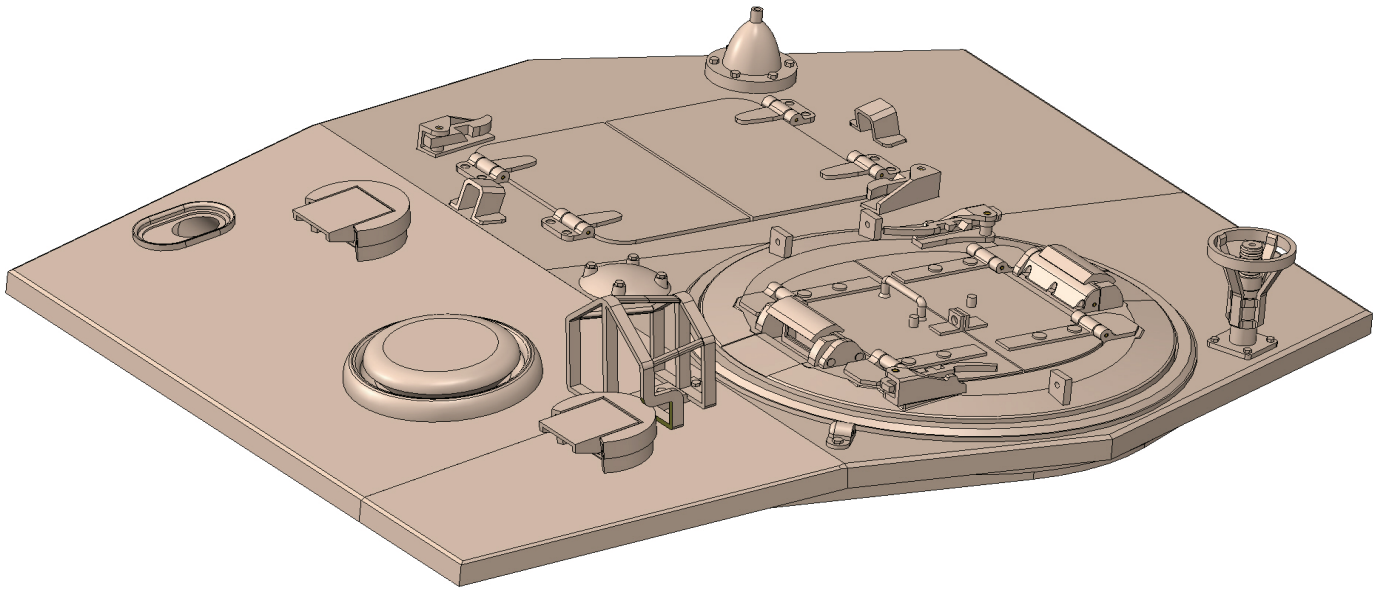

3D PRINTED PARTS:	05-01A (1x), 05-01B (2x), 05-01C (1x), 05-01D (1x), 05-01E (1x), 05-01F (1x), 05-01G (2x), 05-01H (2x), 05-02A (1x), 05-02B (1x), 05-02C (2x), 05-03 (1x), 05-04A (1x), 05-04A (1x), 05-05A (2x), 05-05B (2x), 05-06A (2x), 05-06B (2x), 05-07 (1x), 05-08 (1x), 05-09 (2x), 05-10A (1x), 05-10B (1x).
OPTIONAL 3D PRINTED PARTS::	05-01AB (1x), 05-01ABCE (1x), 05-01ABCE_no_handles (1x), 05-01C_no_handles (1x), 05-02AB (1x), 05-02BC (1x), 05-02ABC (1x), 05-04AB (1x), 05-07_SLA (1x), 05-09_alt (2x), 05-10AB (1x).
NON-PRINTED PARTS:	M4 nut (5x), M2x16mm screw (4x), Pin -diameter 1mm -lenght 14mm (4x), Pin -diameter 1mm -lenght 15mm (4x), Pin -diameter 1mm -lenght 29mm (2x),

Assembly 05 - Top of the Turret

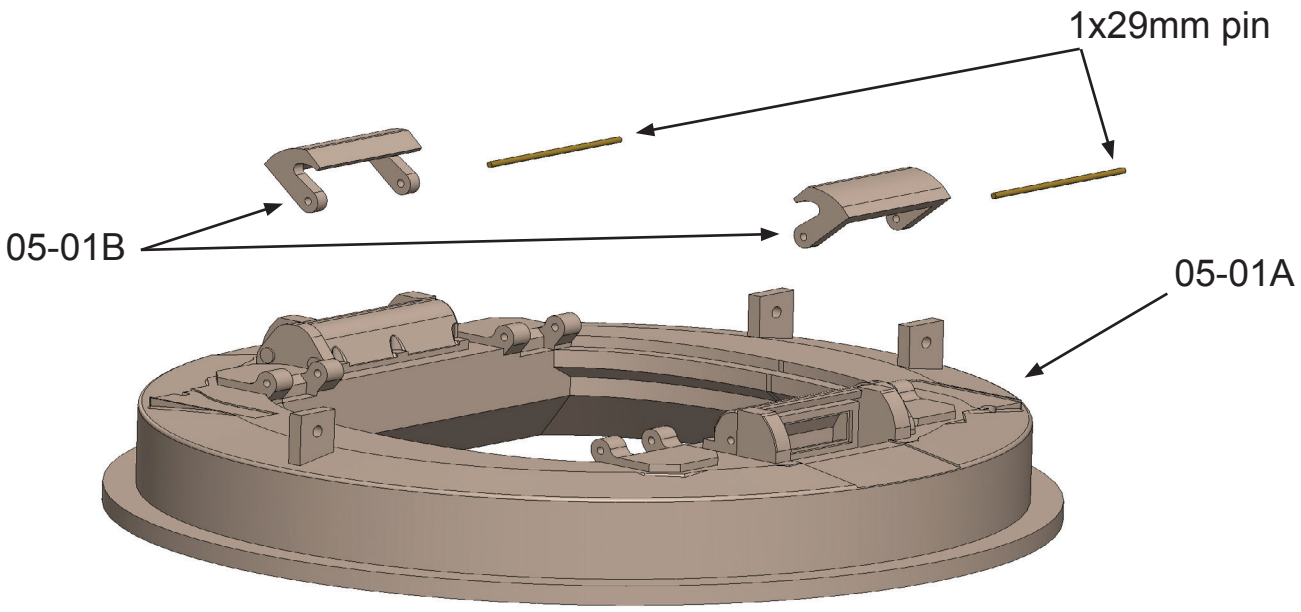

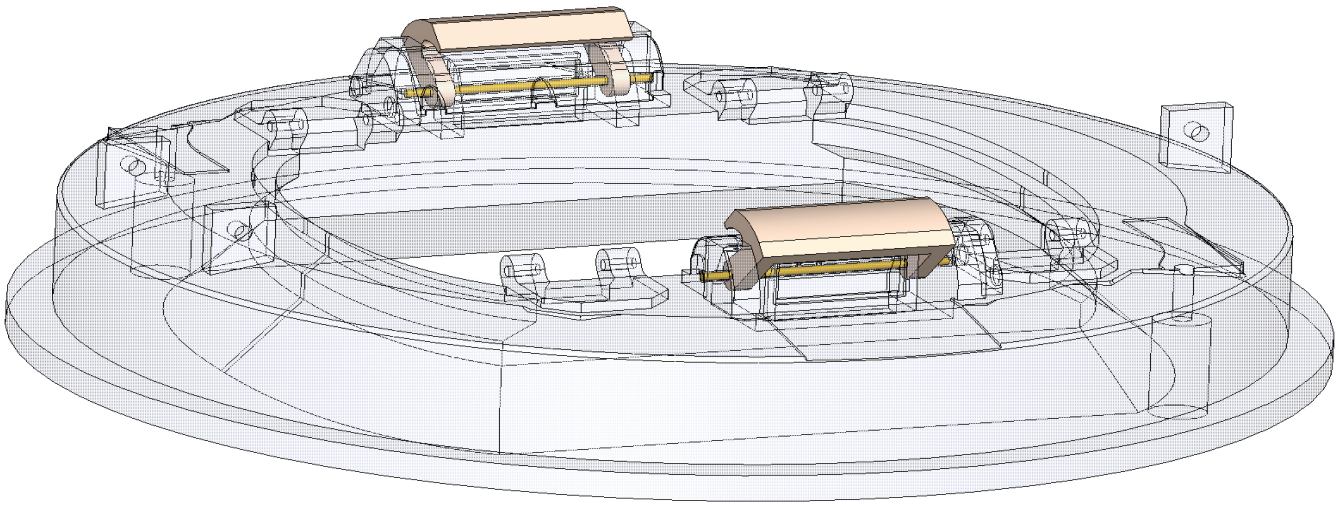

Attach two parts 05-01B to part 05-01A.Use a wire with a diameter of 1 mm.
The length of the wire is 29 mm.

Assembly 05 - Top of the Turret

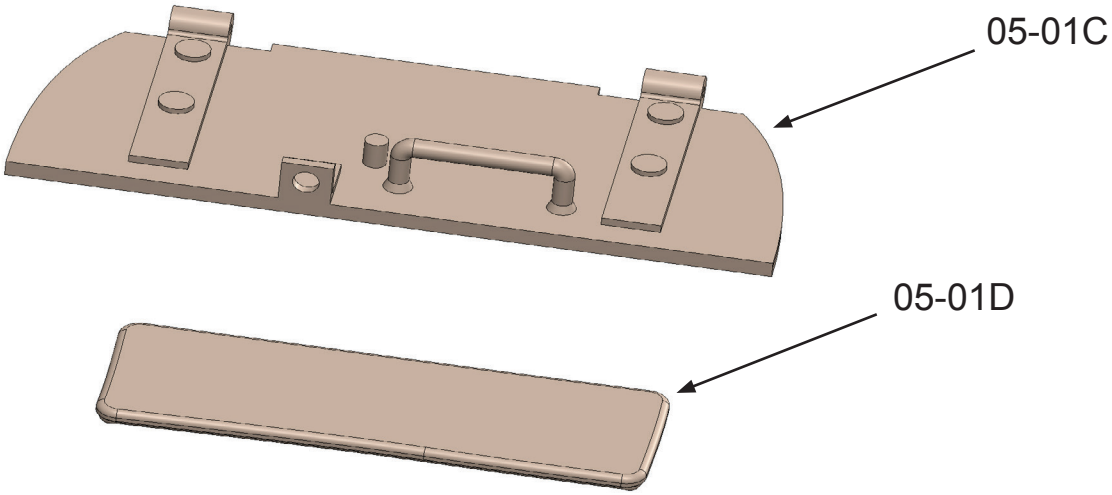

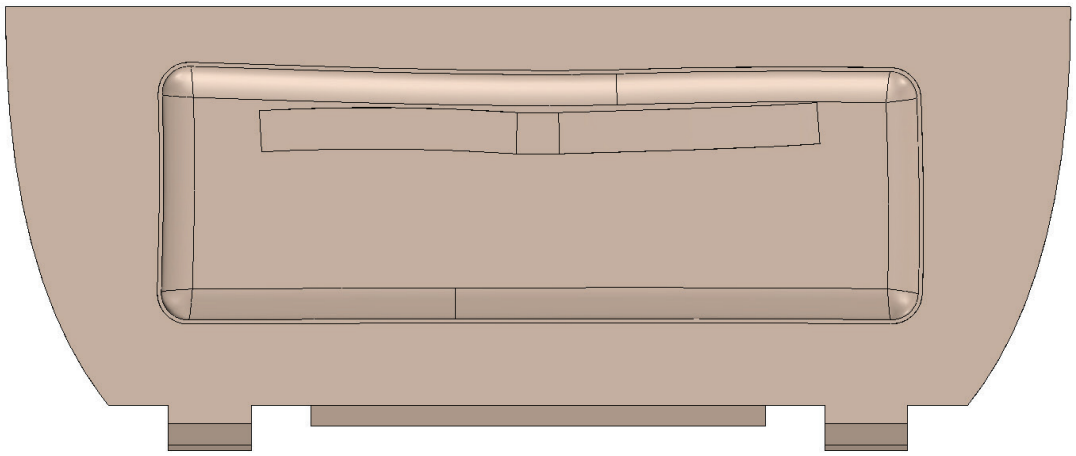

Glue parts 05-01C and 05-01D together.

Assembly 05 - Top of the Turret

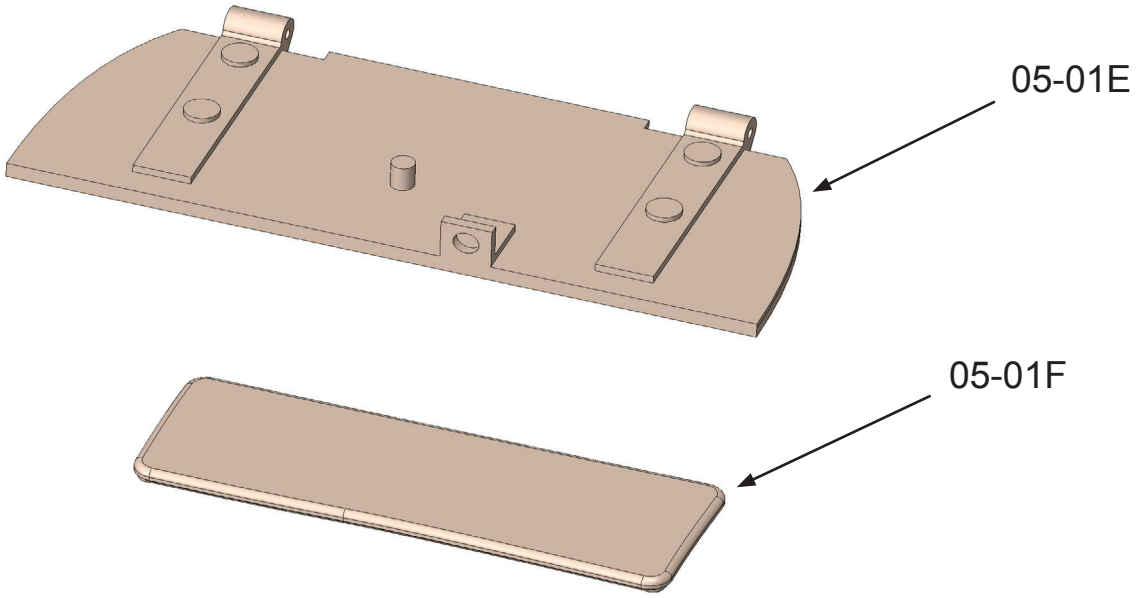

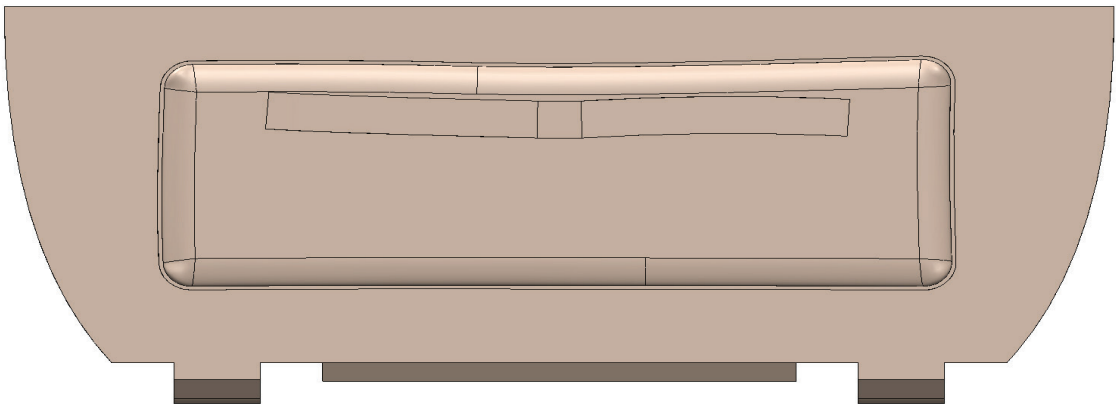

Glue parts 05-01E and 05-01F together.

Assembly 05 - Top of the Turret

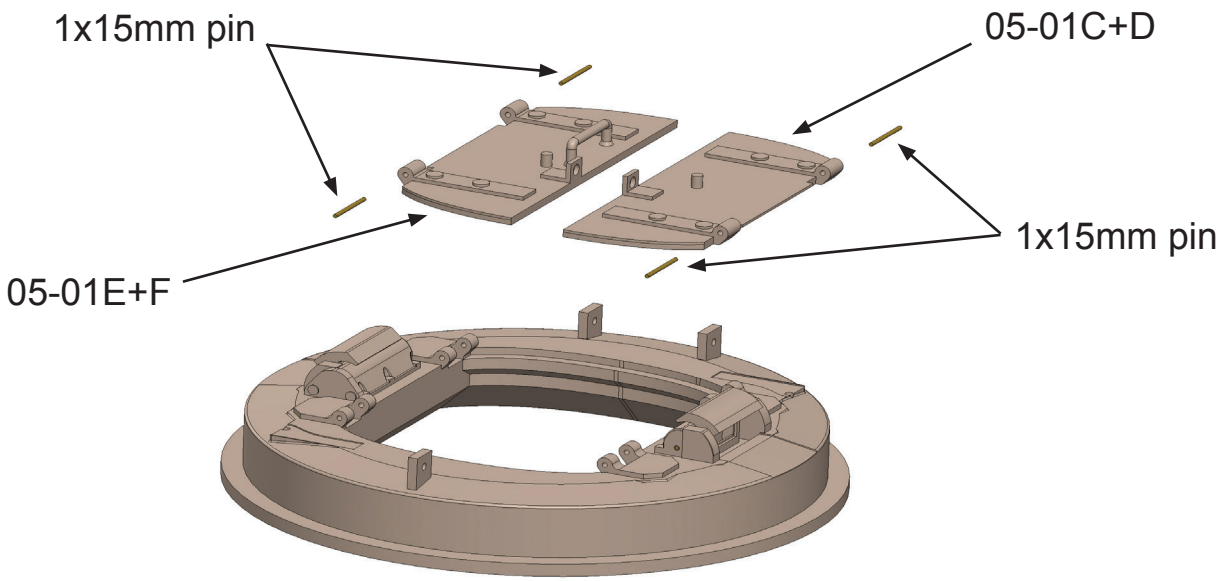

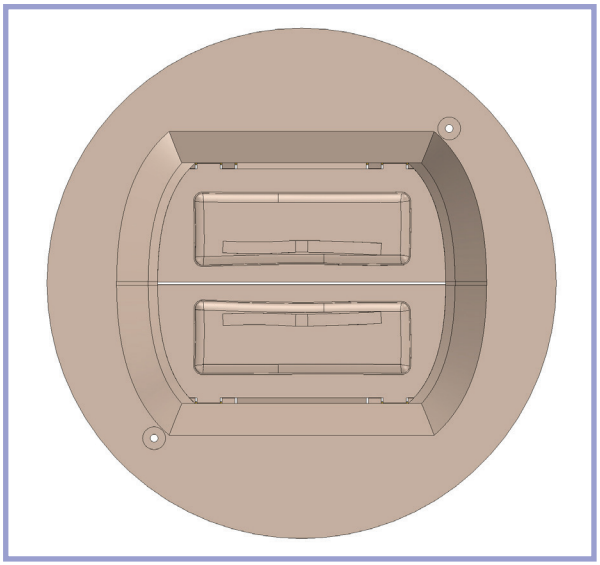

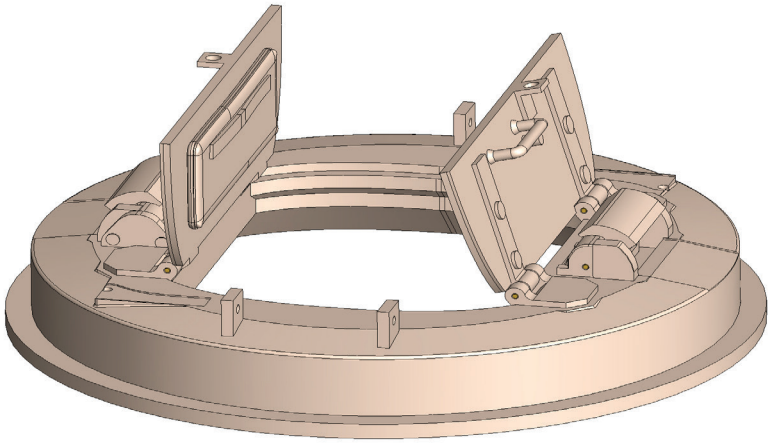

Attach the parts assemblies 05-01C + D and 05-01E + F to part 05-01A using a wire with a diameter of 1 mm and a length of 15 mm.
If you are not interested in such a complex construction, use simplified, alternative parts.

Assembly 05 - Top of the Turret

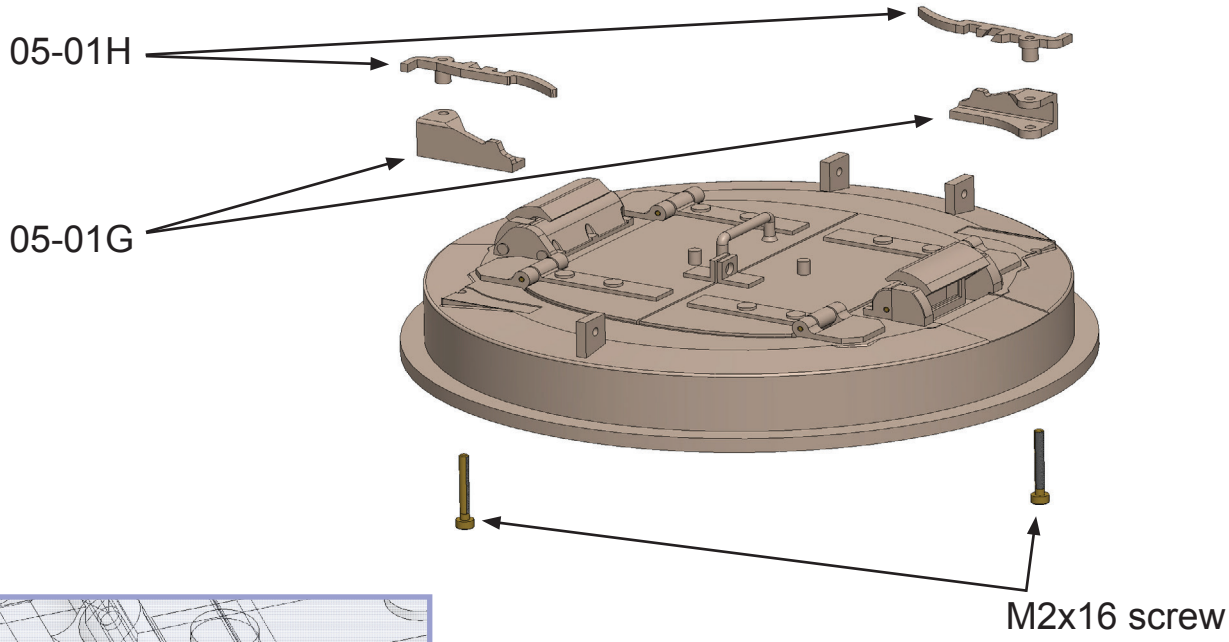

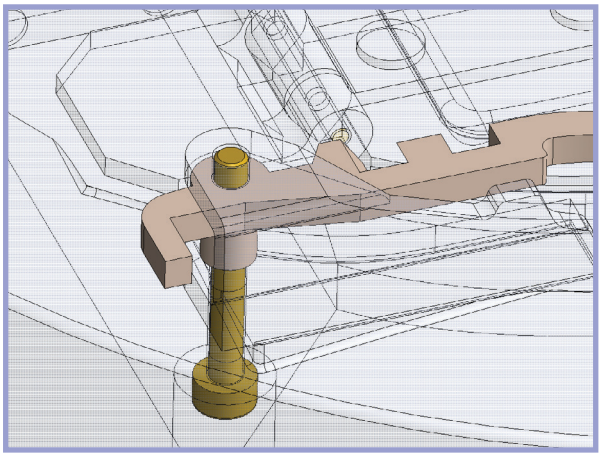

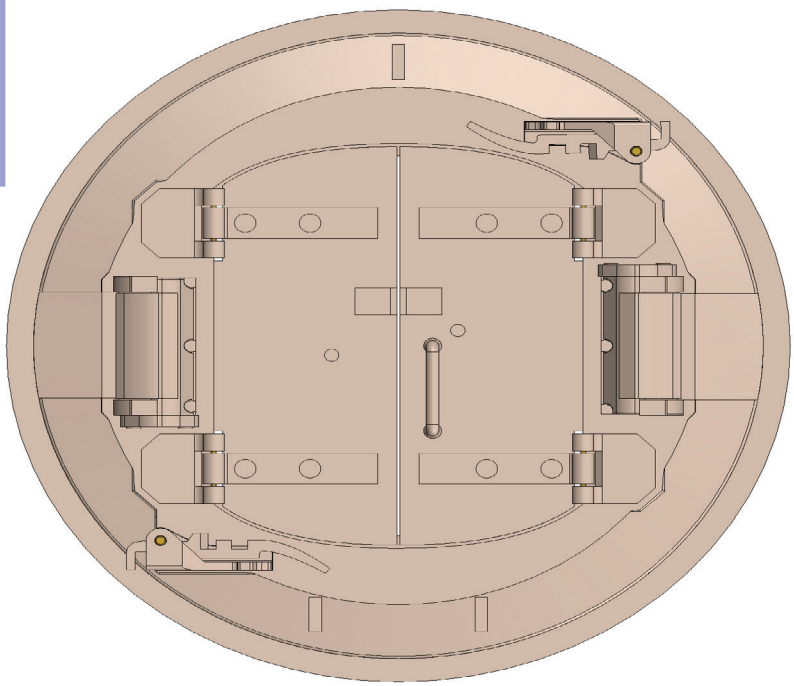

Glue the parts 05-01G to part 05-01A.
Attach two parts 05-01H using two M2x16 screws.
The part 05-01H must rotate freely.

Assembly 05 - Top of the Turret

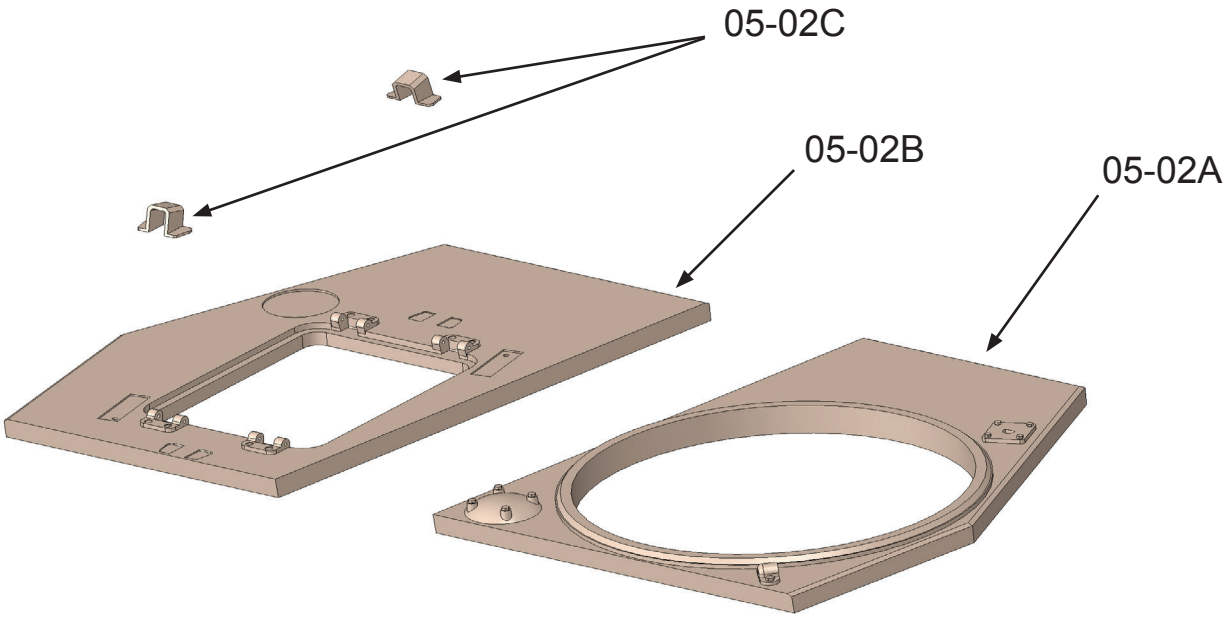

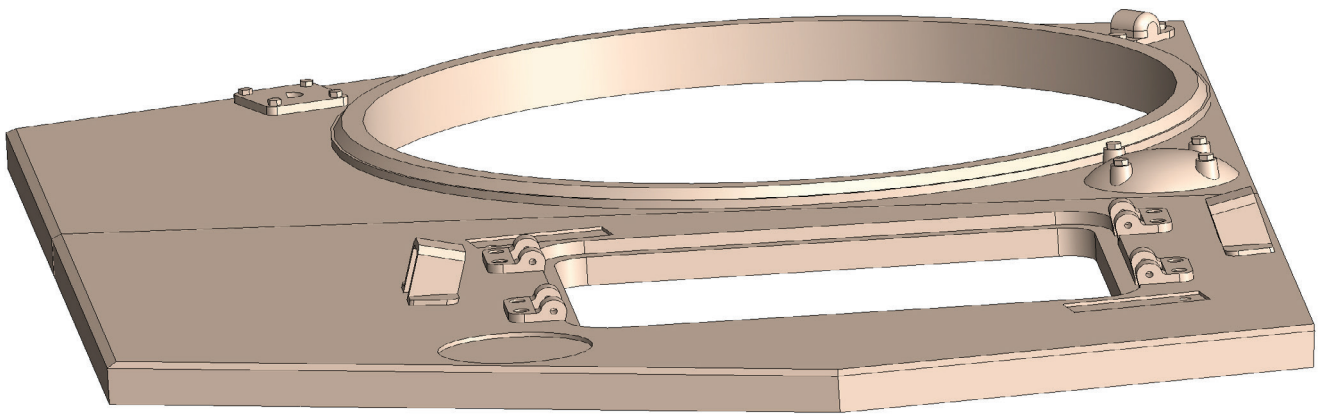

Prepare parts 05-02A and 05-02B.
Glue two parts 05-02C to part 05-02B.
You can skip this step if you are printing part 05-02AB or 05-02ABC.

Assembly 05 - Top of the Turret

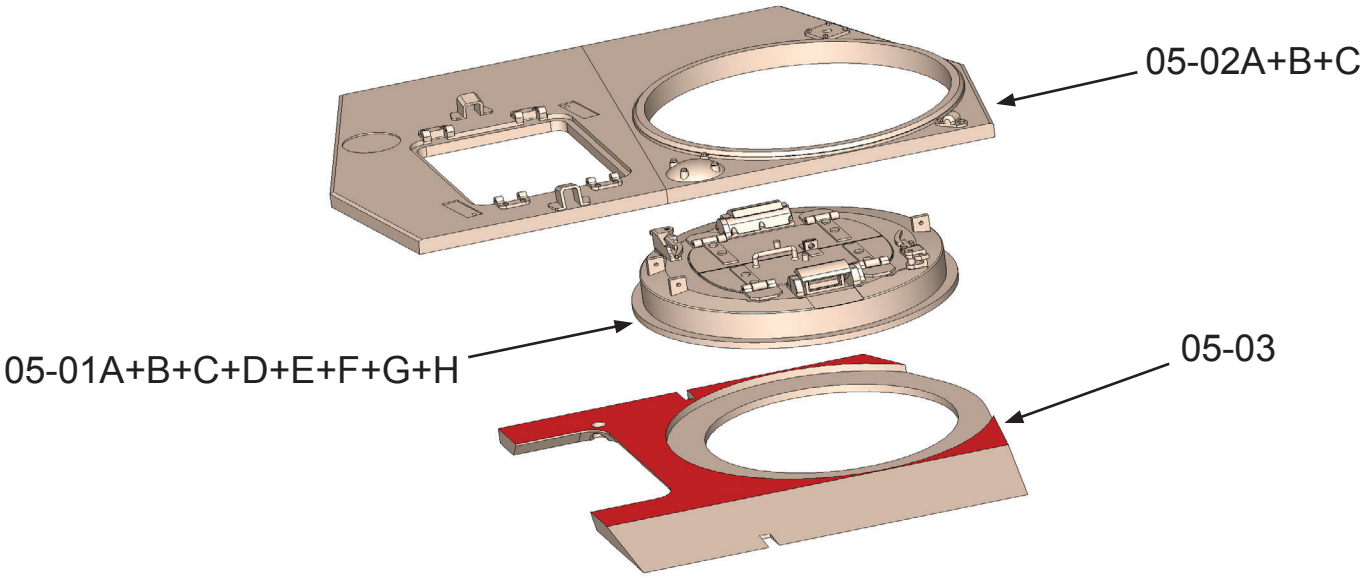

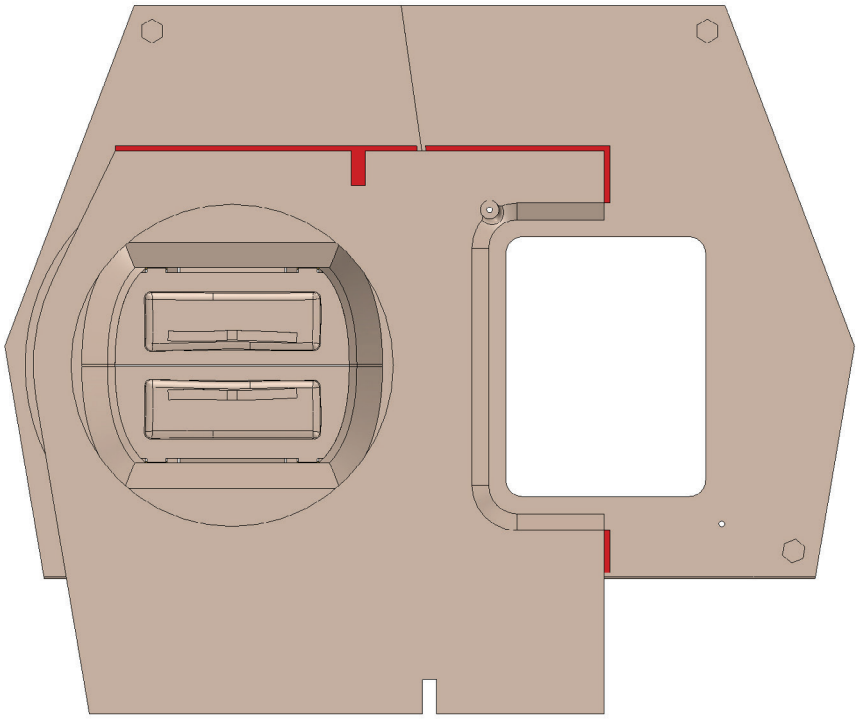

Insert the parts assembly 01-05A to 01-05H between parts 05-02A+B+C and 05-03.
Glue parts 05-02A+B and 05-03 together,
align according to the groove on the parts (bottom picture, red color).
Apply the adhesive only to the areas marked in red.
Part 01-05A must rotate freely.

Assembly 05 - Top of the Turret

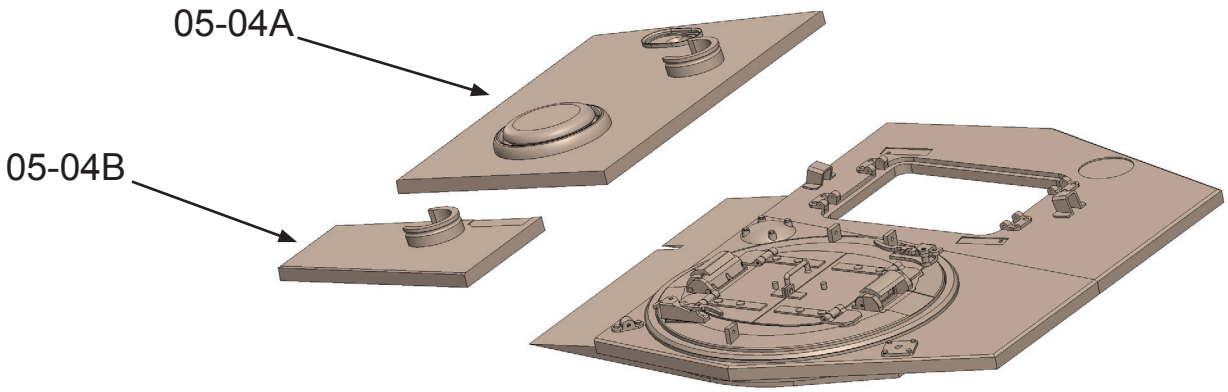

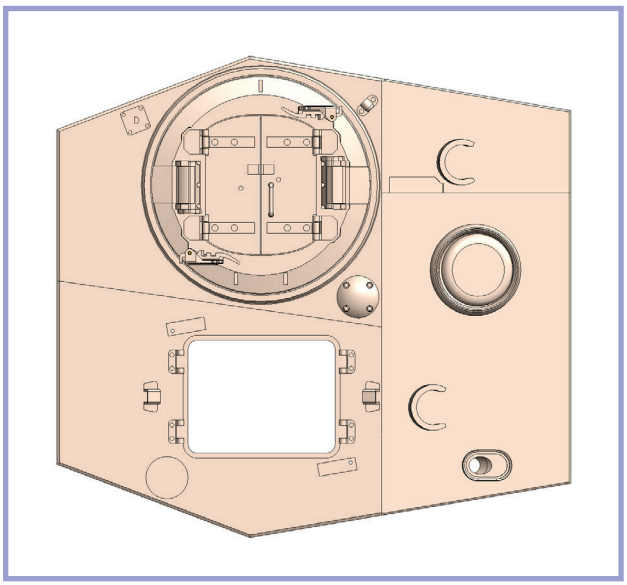

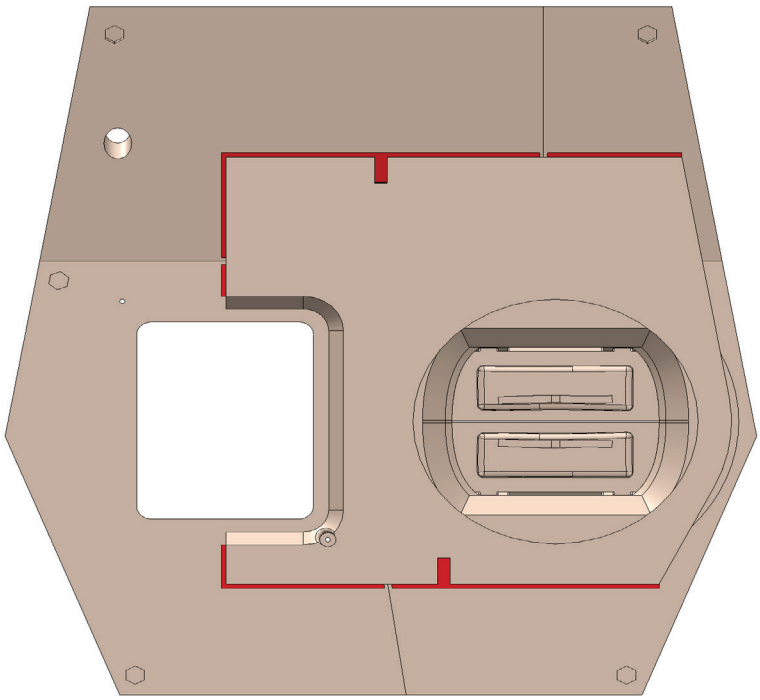

Glue parts 05-04A and 05-04B.
Align according to the groove on the parts (bottom picture, red color).

Assembly 05 - Top of the Turret

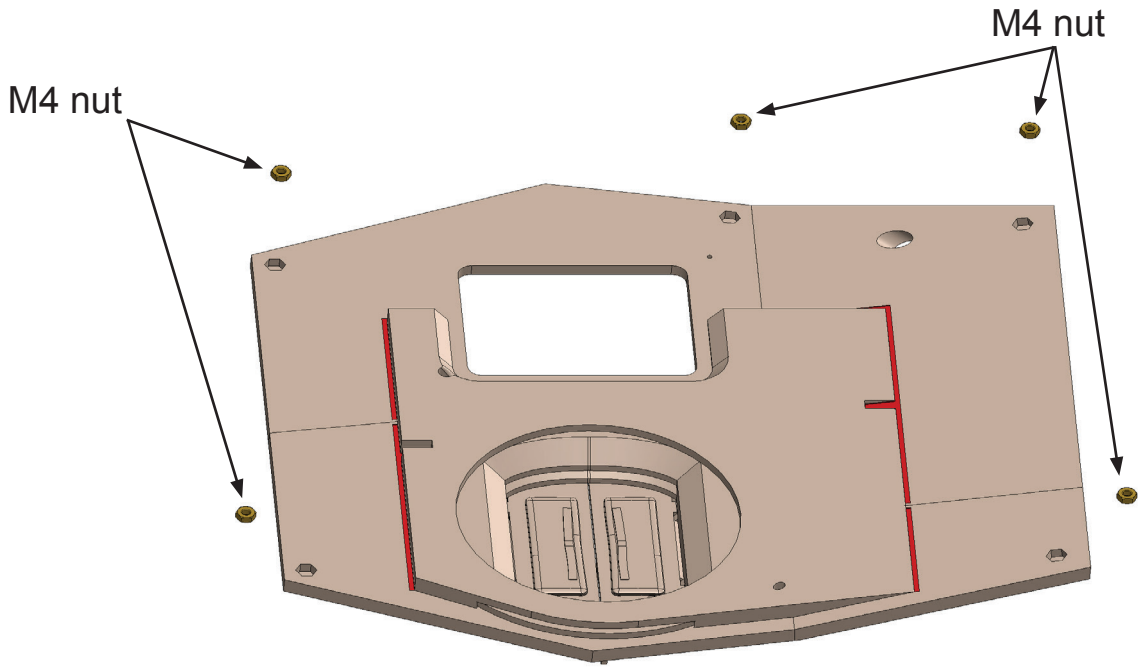

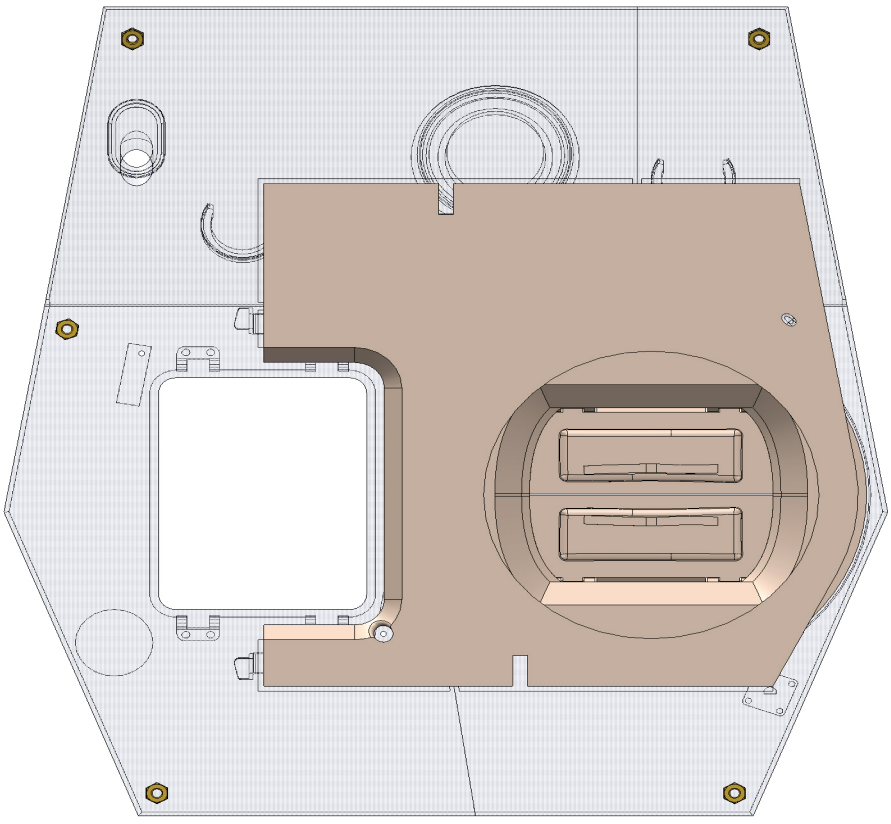

Glue five M4 nuts into parts 05-02A+B and 02-04A+B.

Assembly 05 - Top of the Turret

2x

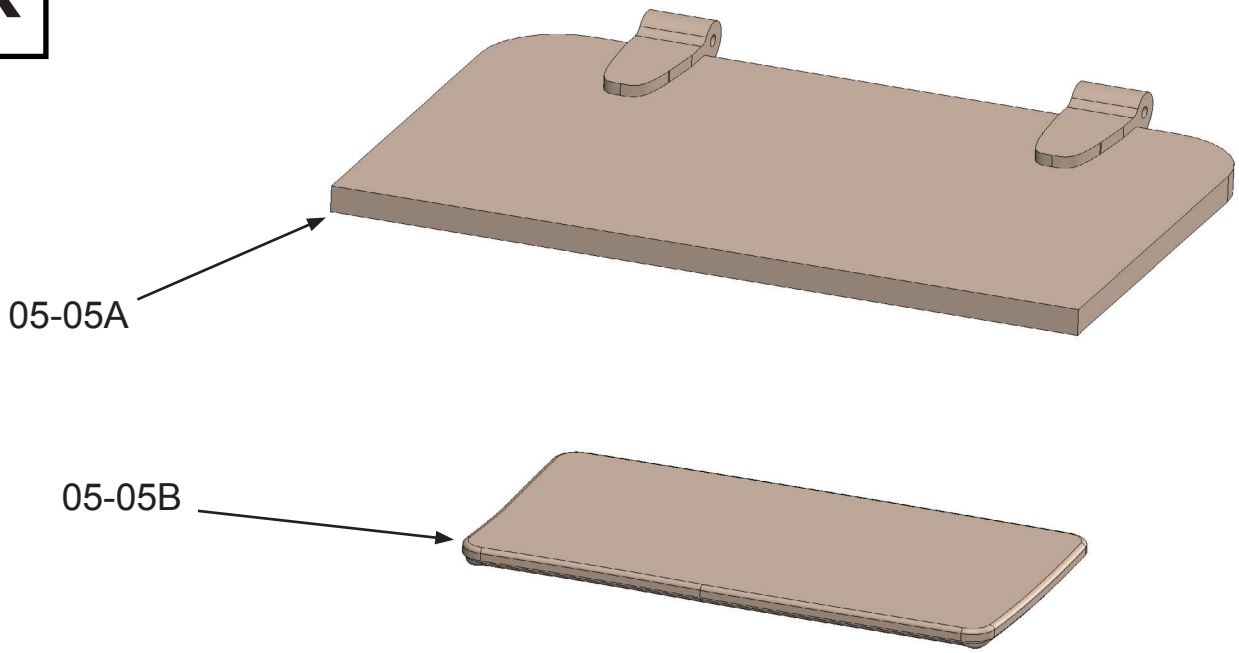

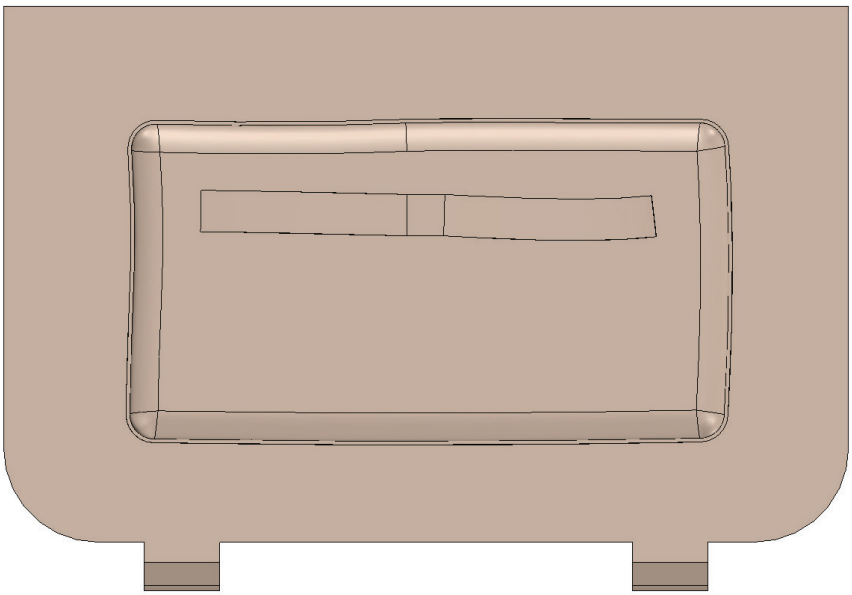

Glue part 05-05A and 05-05B together. You will need two such units.

Assembly 05 - Top of the Turret

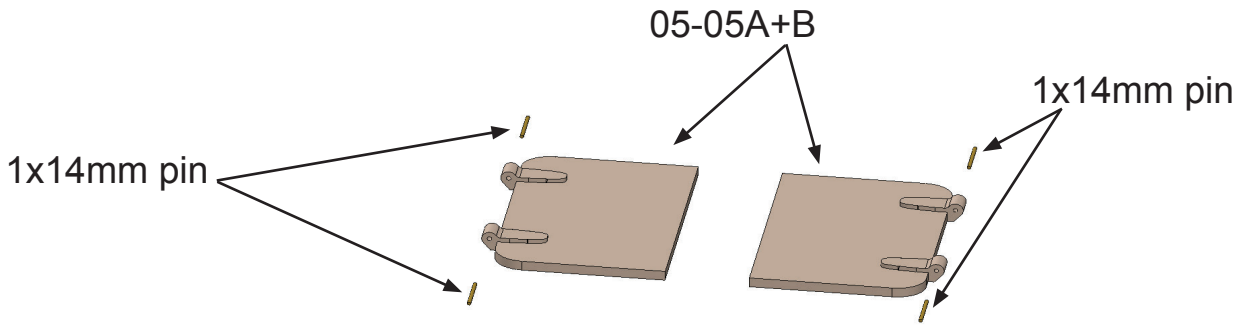

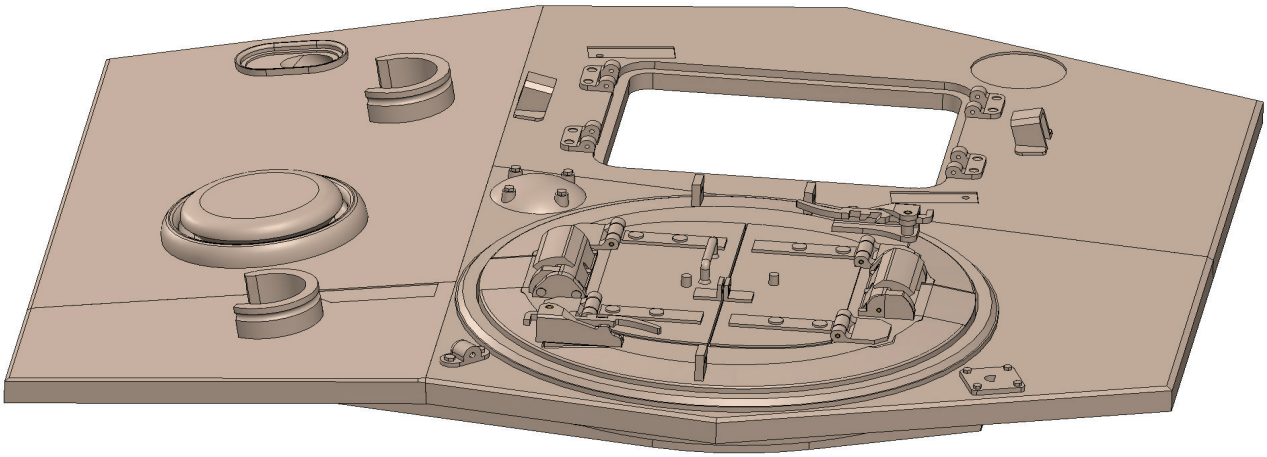

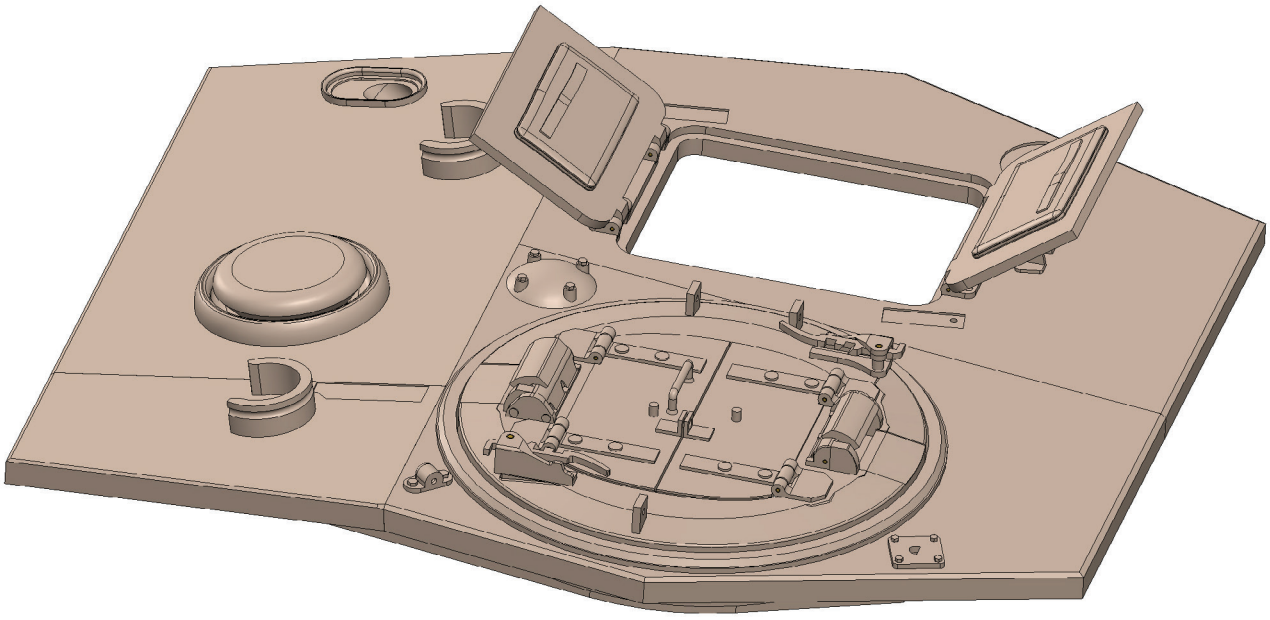

Attach the 05-05A and 05-05B part units using a 1mm diameter, 14mm long wire.

Assembly 05 - Top of the Turret

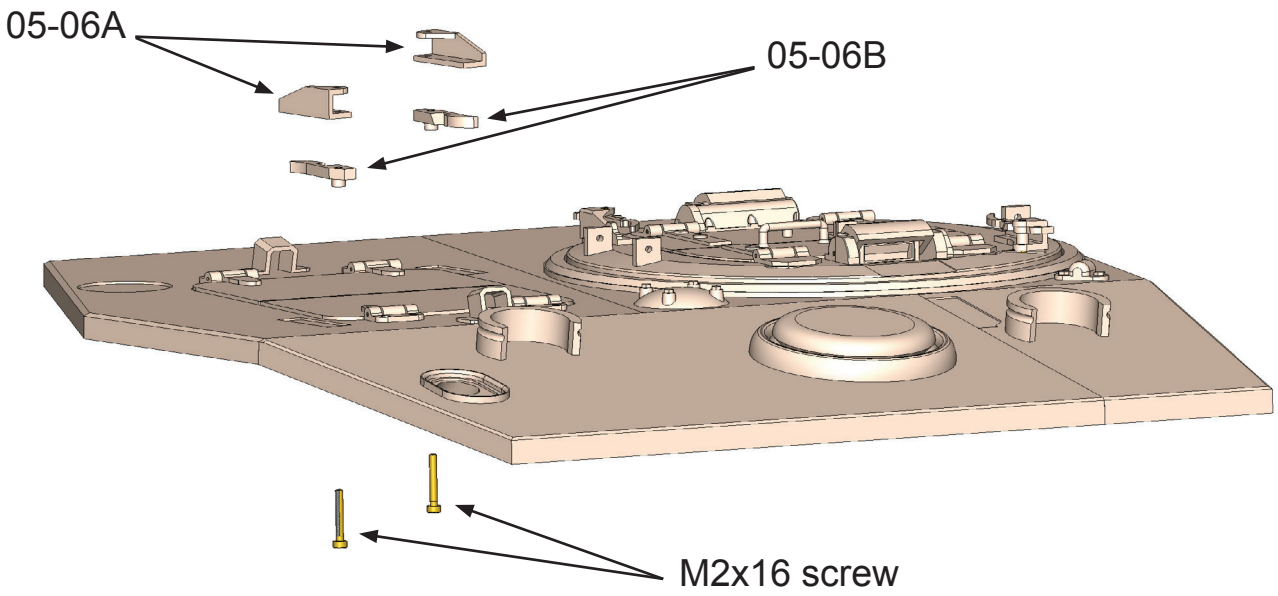

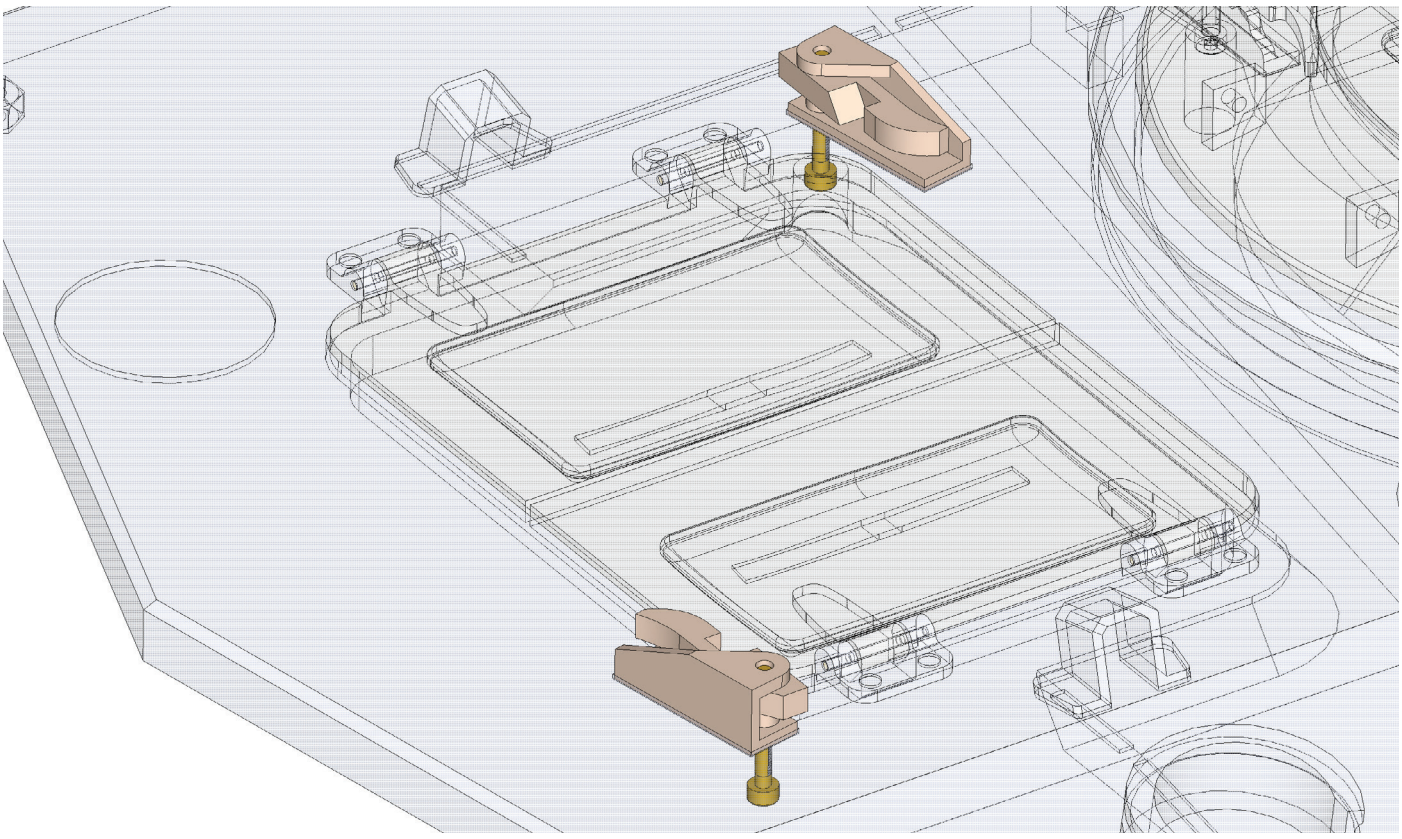

Glue the parts 05-06A to part 05-02B.
Attach two parts 05-06B using two M2x16 screws.
The part 05-06B must rotate freely.

Assembly 05 - Top of the Turret

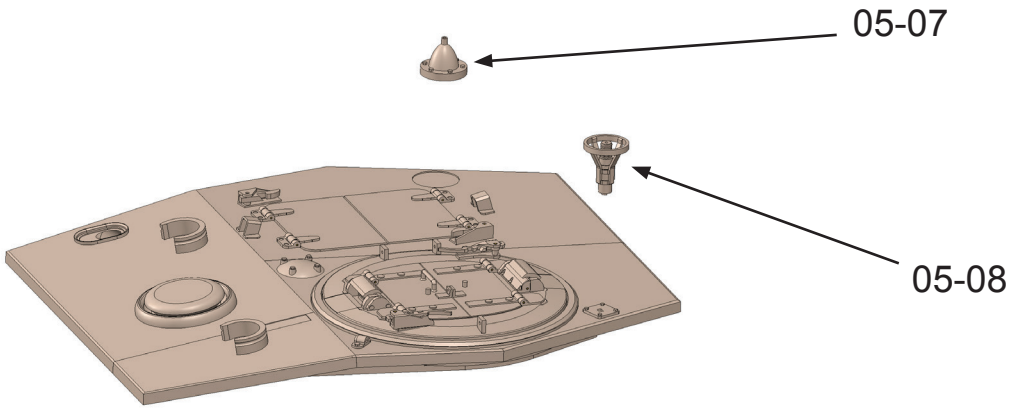

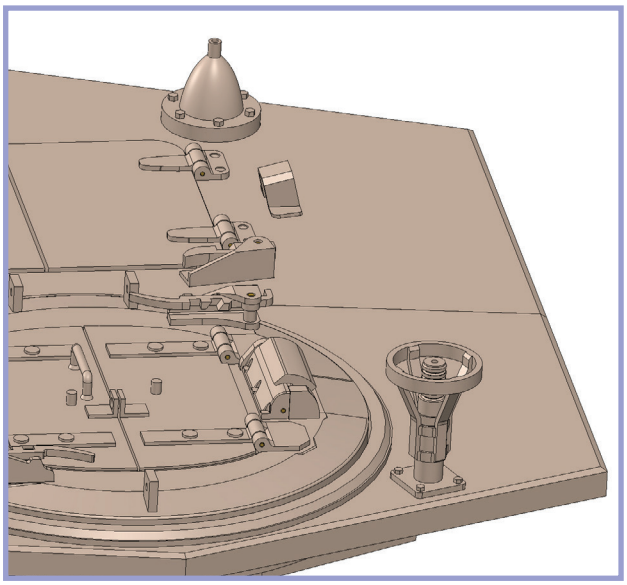

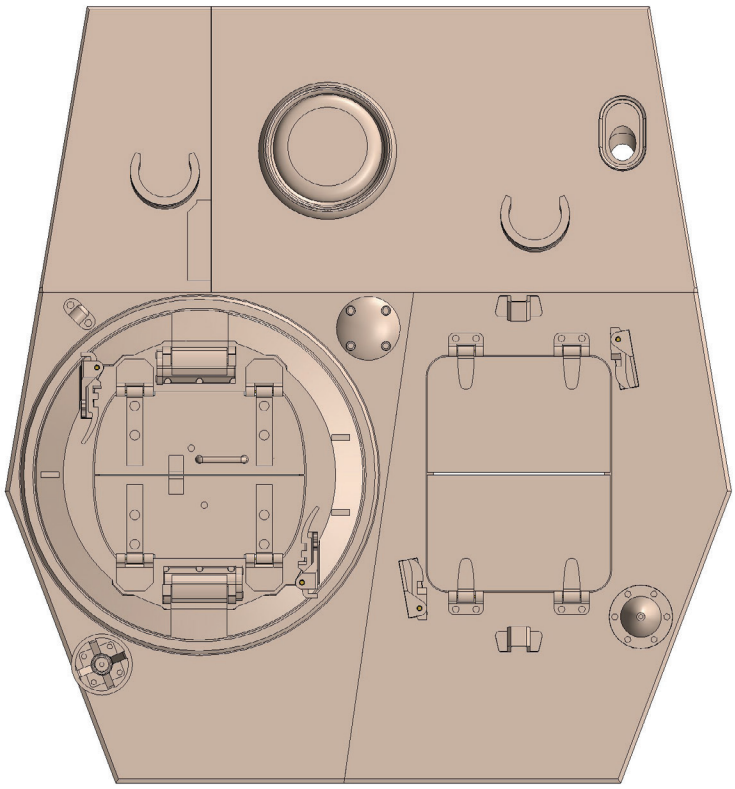

Glue parts 05-07 and 05-08.

Assembly 05 - Top of the Turret

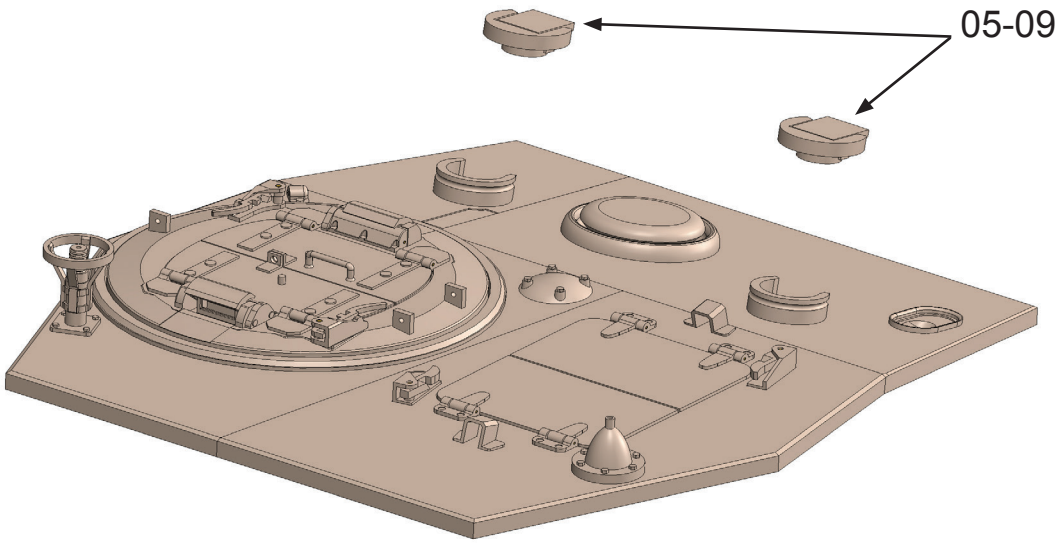

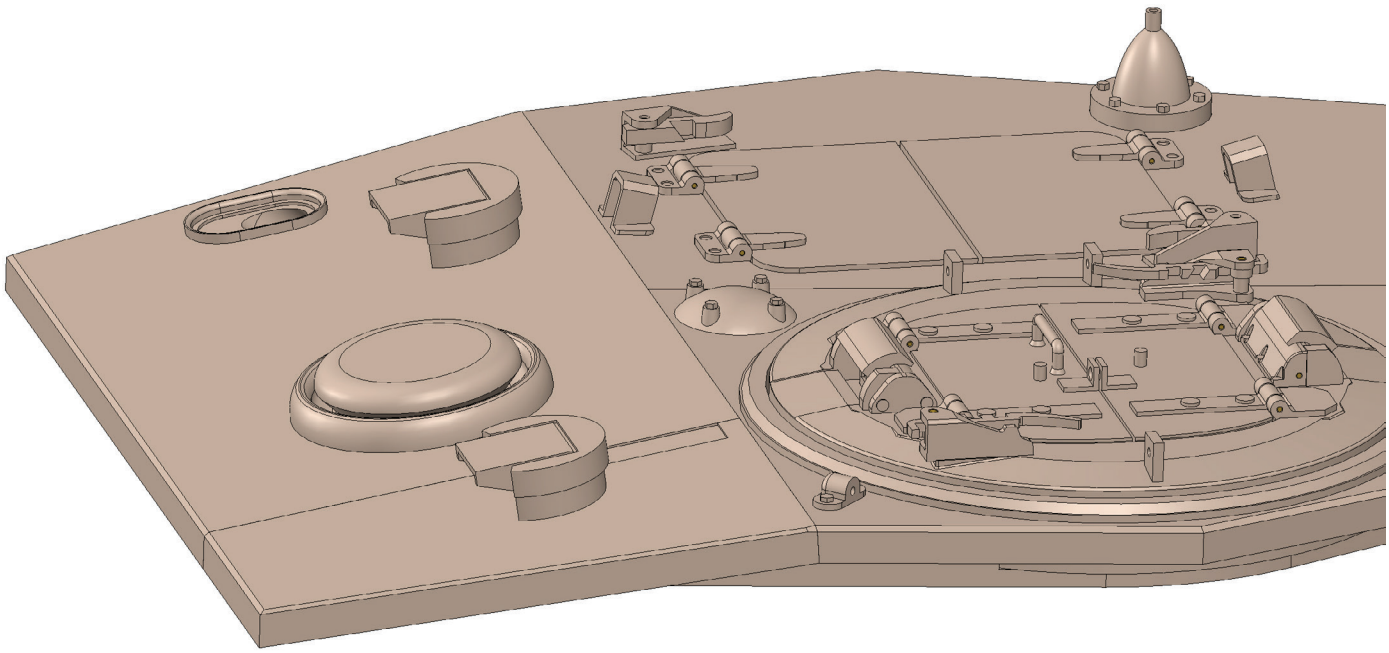

Add two parts 05-09. You don’t have to glue the parts. They can be partially rotated.

Assembly 05 - Top of the Turret

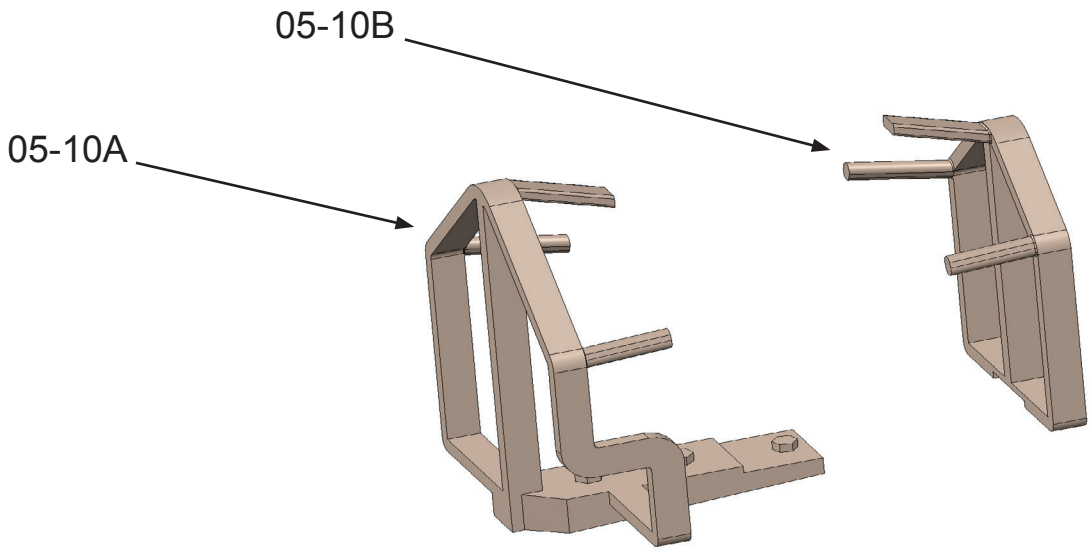

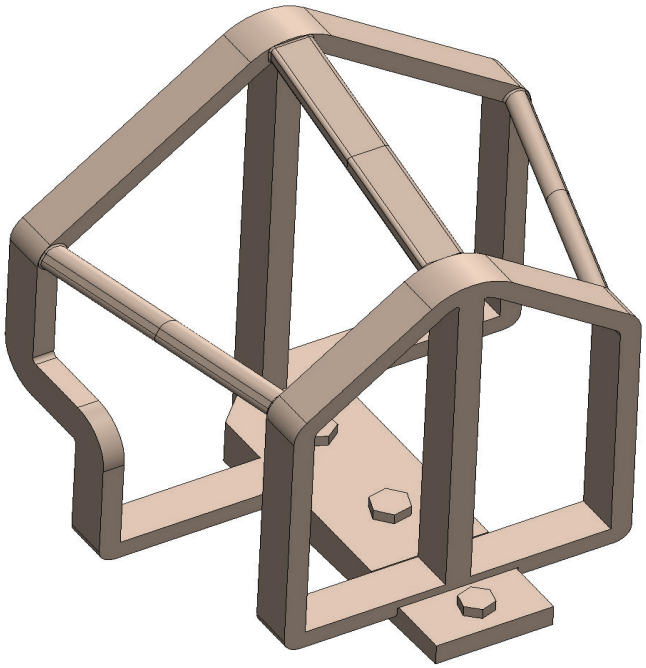

Glue parts 05-10A and 05-10B together.
You can skip this step when using part 05-10AB.

Assembly 05 - Top of the Turret

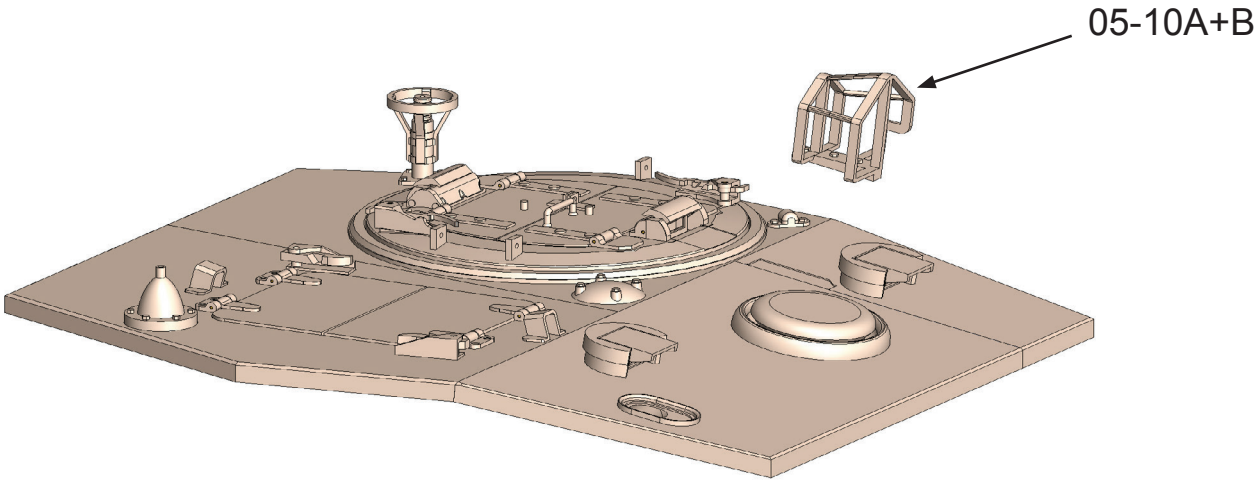

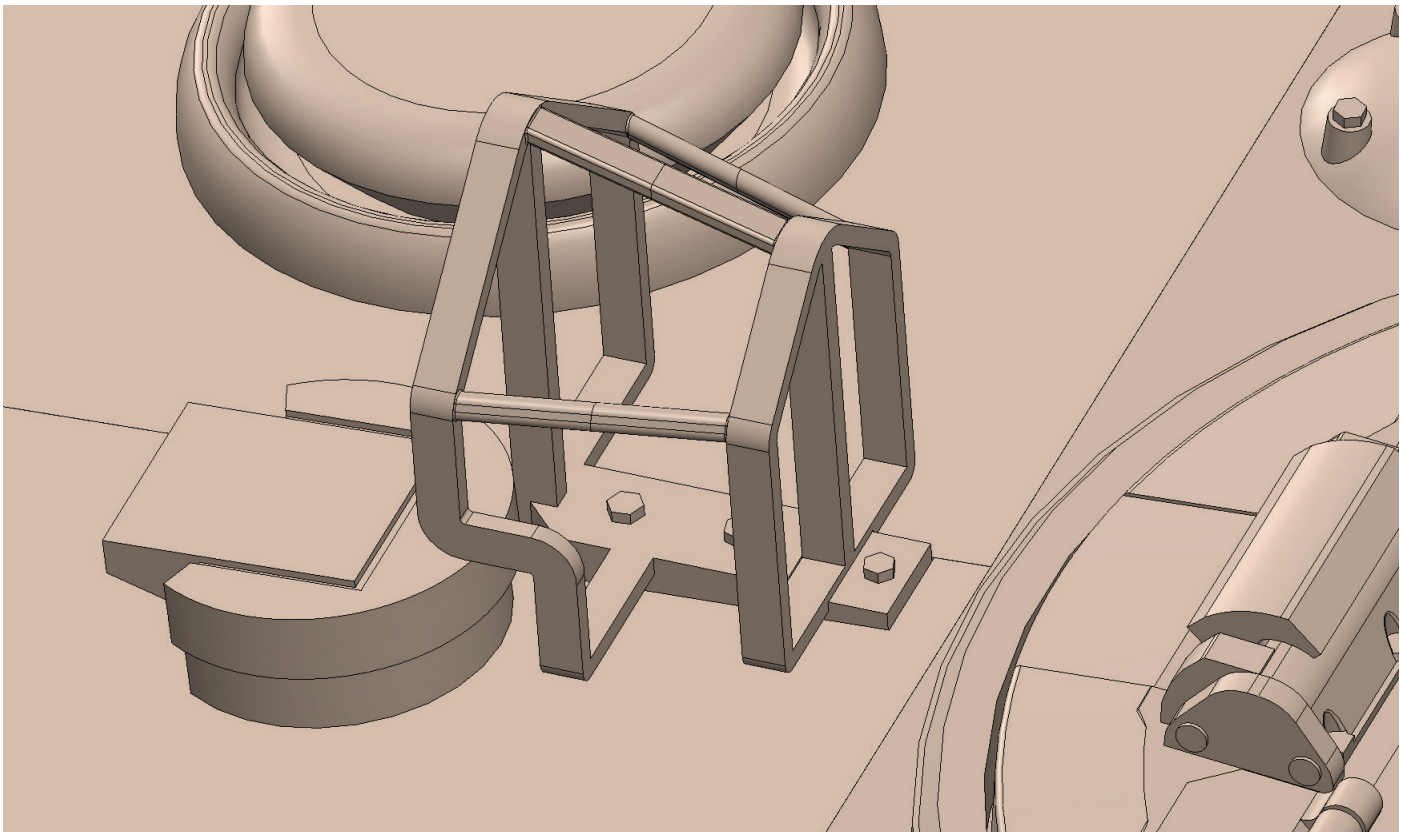

Glue part 05-10AB to part 05-04.

Assembly 05 - Top of the Turret

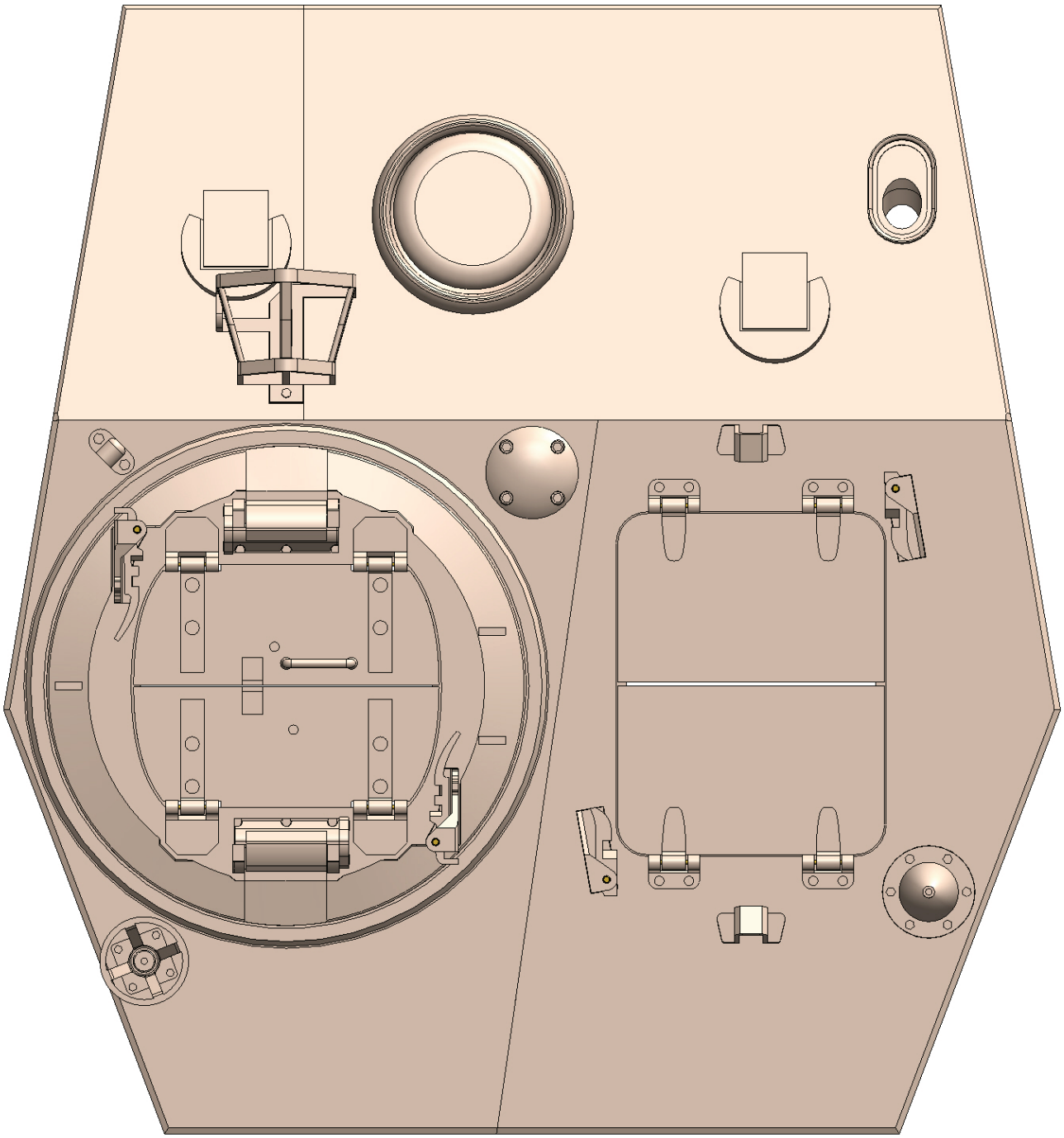

View of the finished set.

Assembly 05 - Top of the Turret

Assembly 06 - Cannon

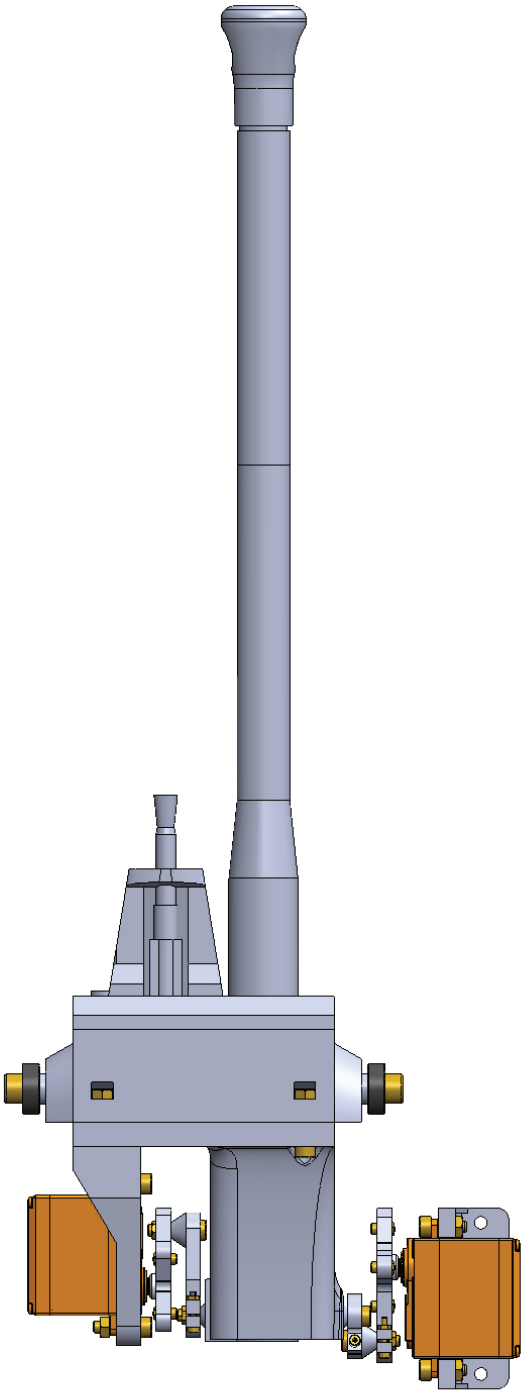

Cannon - version A
moves with the levers

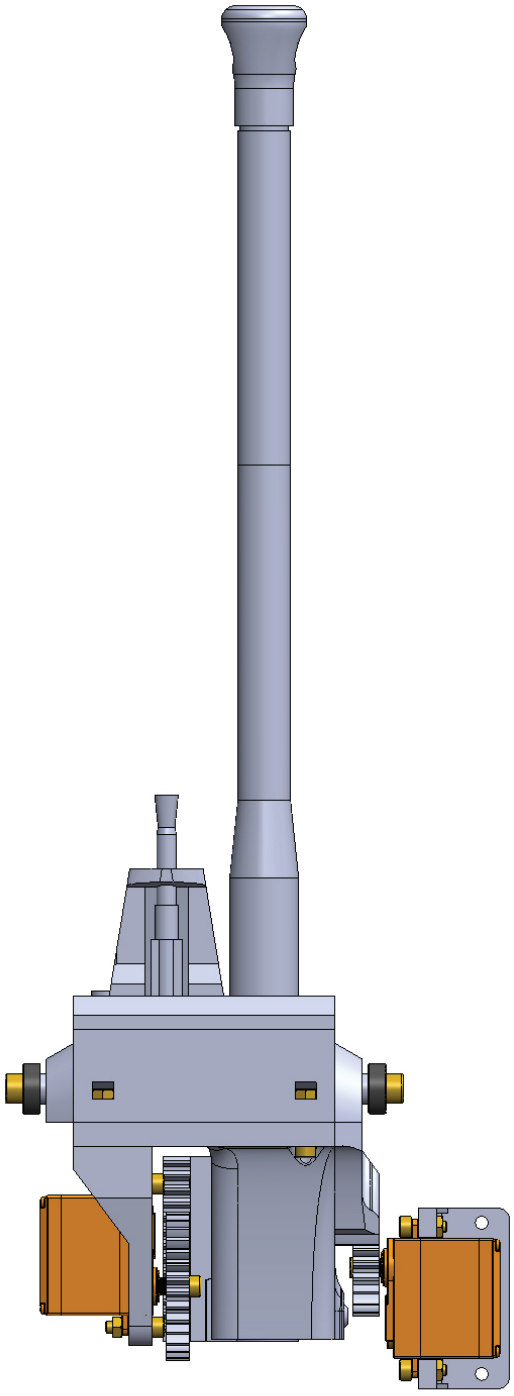

Cannon - version B
moves with the gears

You can use two different versions of mechanics for the cannon.
The only difference is the six 3D printed parts.
They can be swapped at any time, quickly and easily.

Assembly 06 - Cannon A - Version with levers

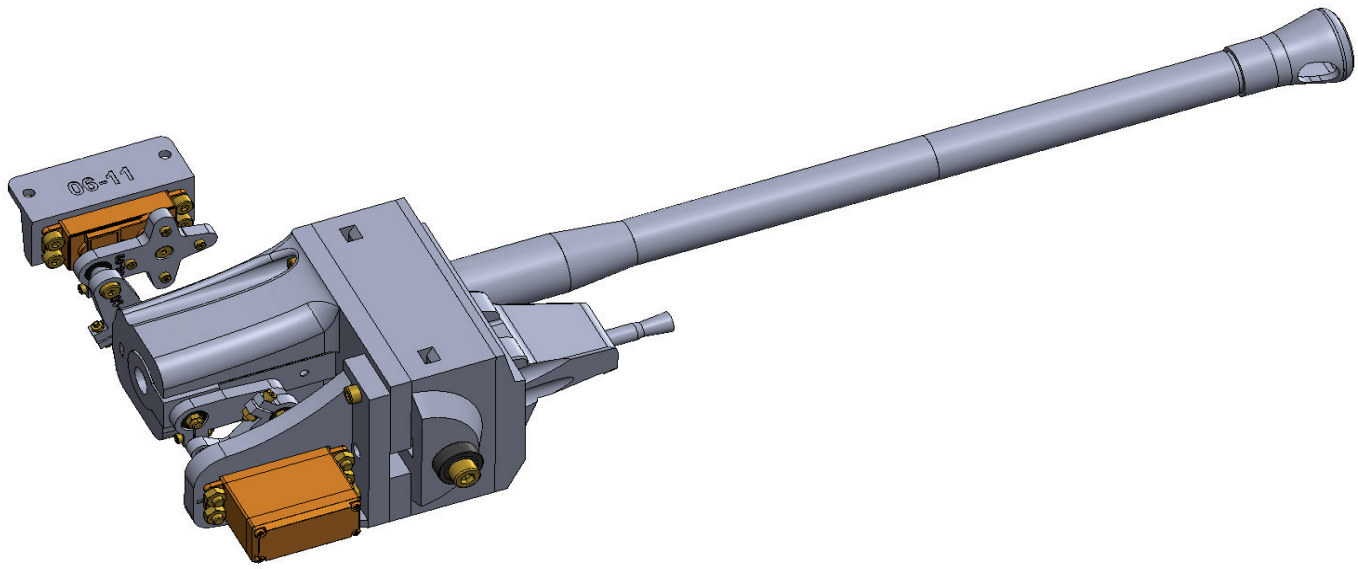

3D PRINTED PARTS:	06-01A (1x), 06-01B (1x), 06-02 (1x), 06-03 (1x), 06-04 (1x), 06-05 (1x), 06-06 (1x), 06-07 (1x), 06-08 (1x), 06-09 (1x), 06-10 (1x), 06-11 (1x), 06-12 (1x), 06-13 (2x).
OPTIONAL 3D PRINTED PARTS:	06-01AB (1x)
NON-PRINTED PARTS:	M6 nut (2x), M4 nut (13x), M3 nut (3x), M2 nut (12x), M6x20mm screw (2x), M4x30mm screw (2x), M4x20mm screw (2x), M4x12mm screw (8x), M3x16mm screw (2x), M3x12mm screw (1x), M2x12mm screw (4x), M2x6mm screw (8x), MG995 servo with arm (2x), 606zz bearing (6x17x6mm) (2x), 623zz bearing (3x10x4mm) (4x).

Assembly 06 - Cannon A - Version with levers

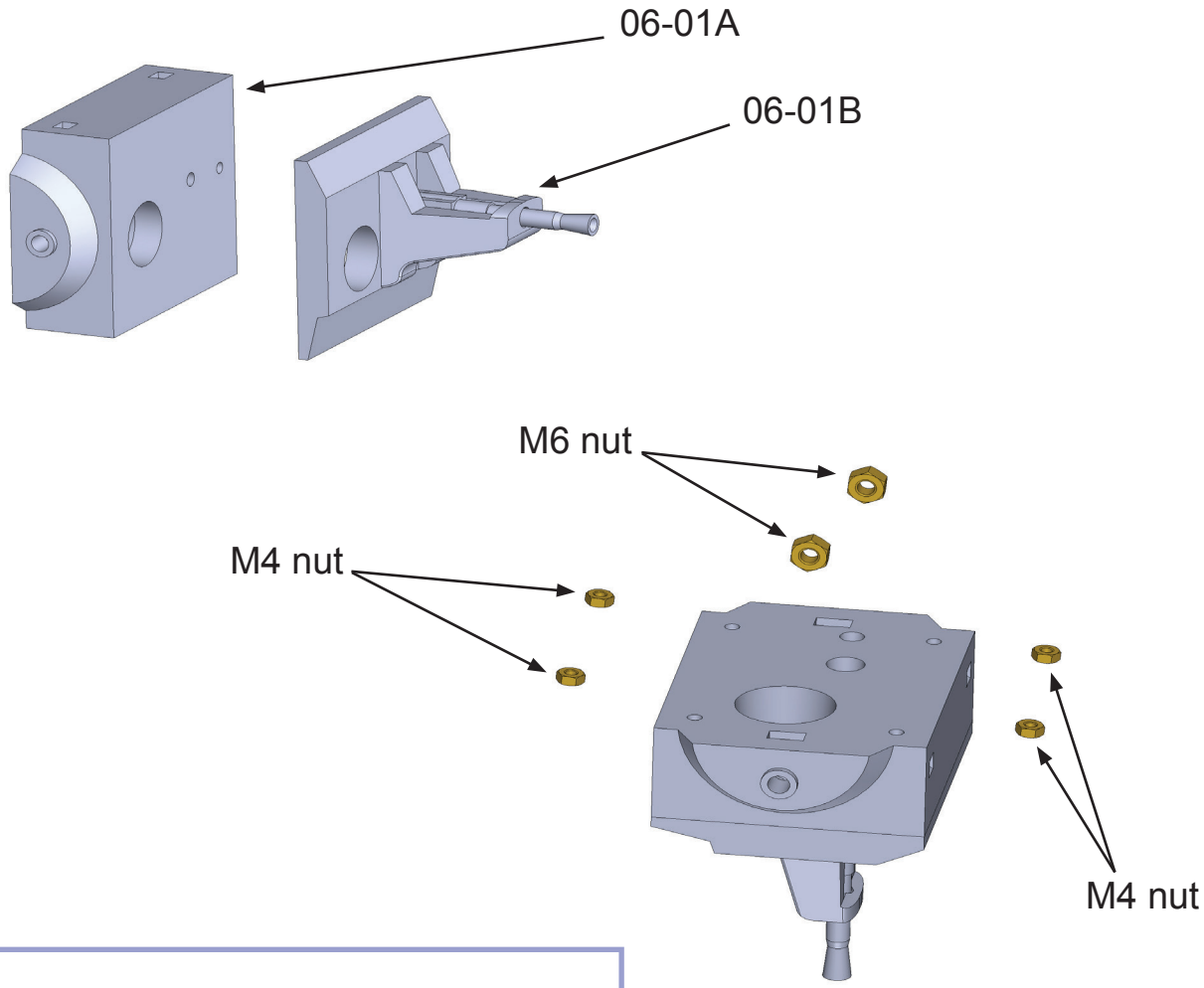

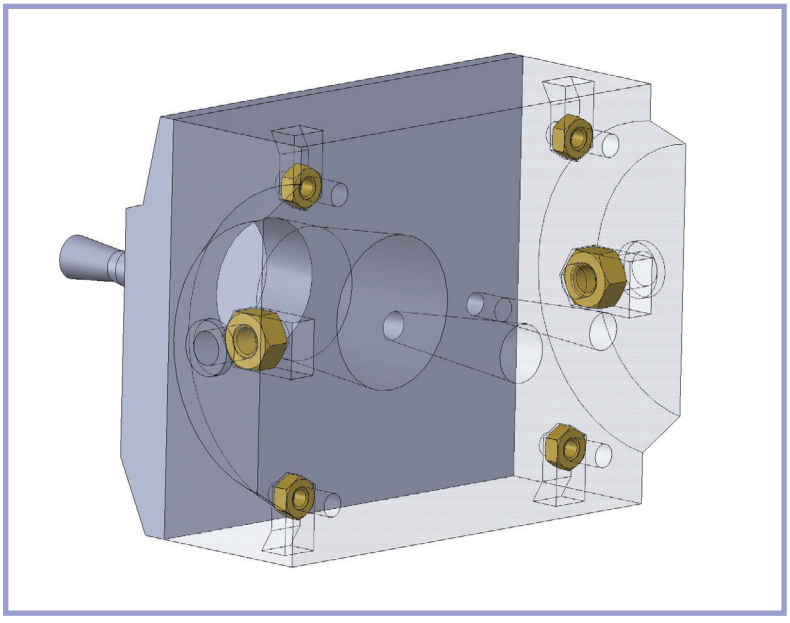

Glue parts 06-01A and 06-01B together.
You can skip this step if you are printing part 06-01AB.
Insert two M6 nuts and 4 M4 nuts into the part.

Assembly 06 - Cannon A - Version with levers

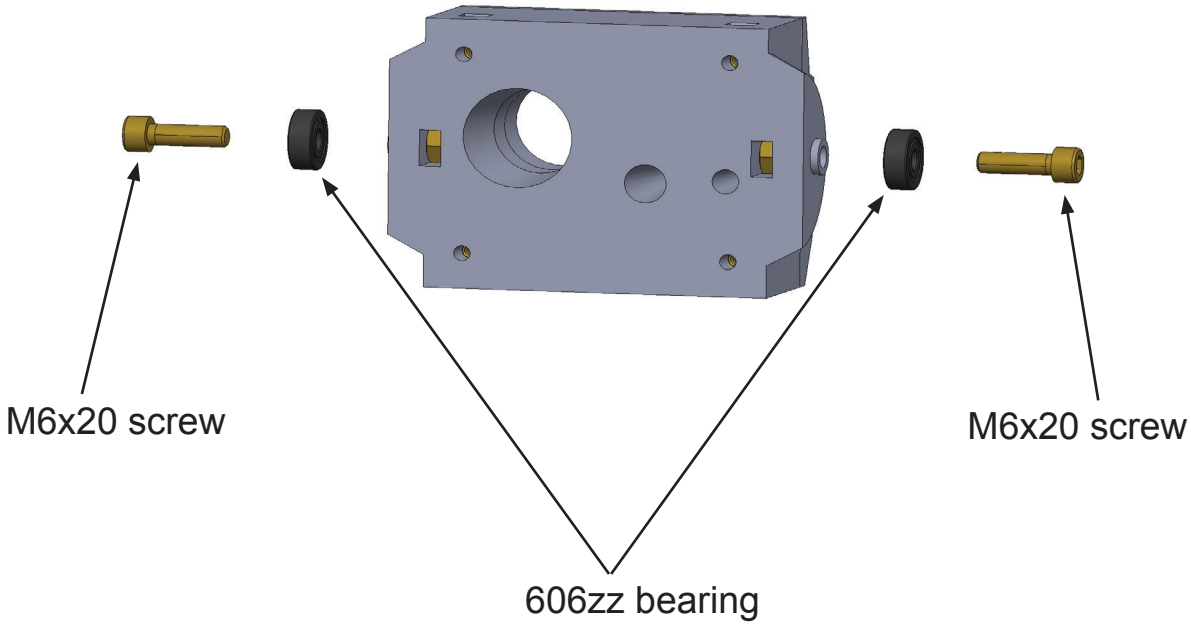

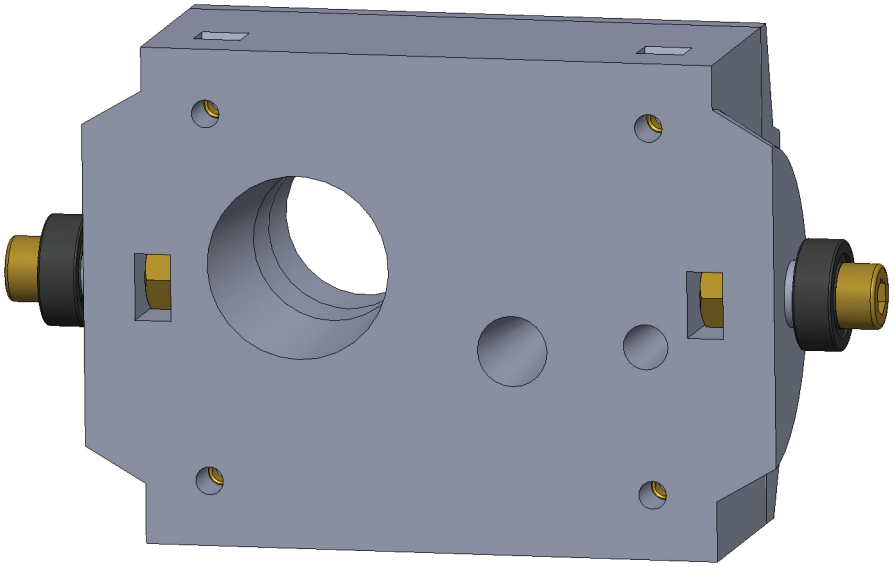

Attach two 606zz bearings with M6x20 screws.

Assembly 06 - Cannon A - Version with levers

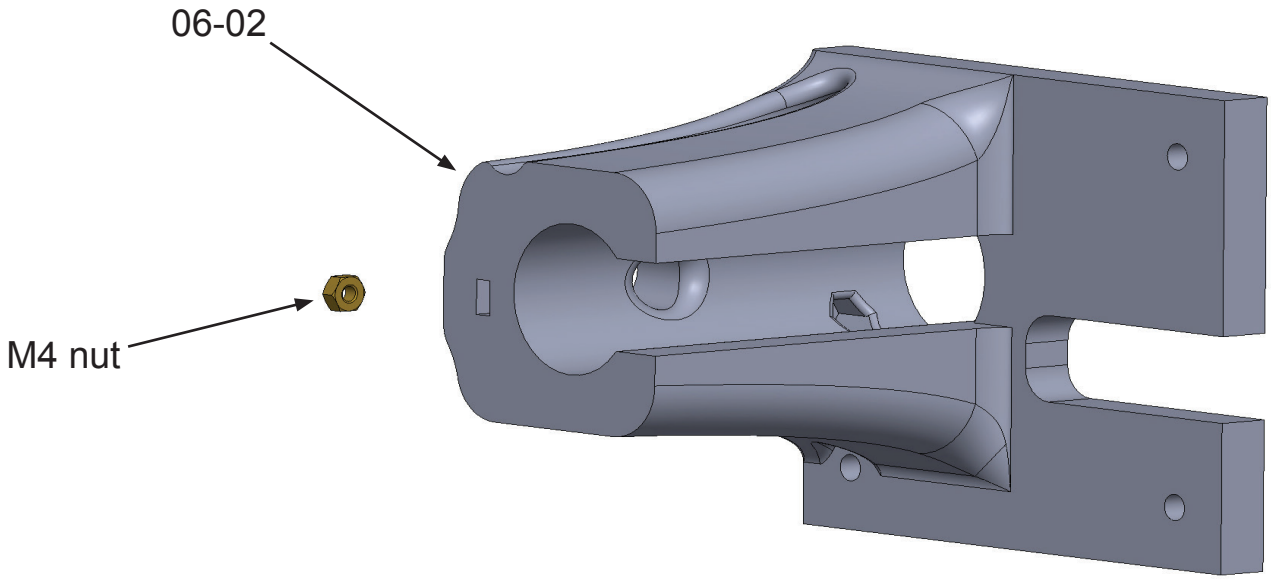

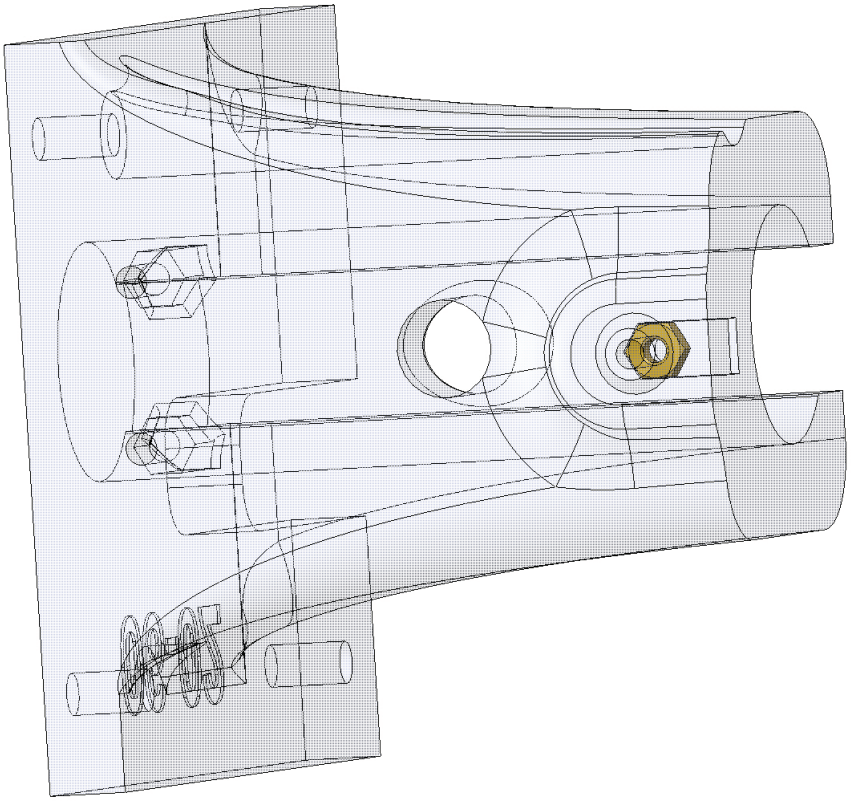

Insert M4 nut into part 06-02.

Assembly 06 - Cannon A - Version with levers

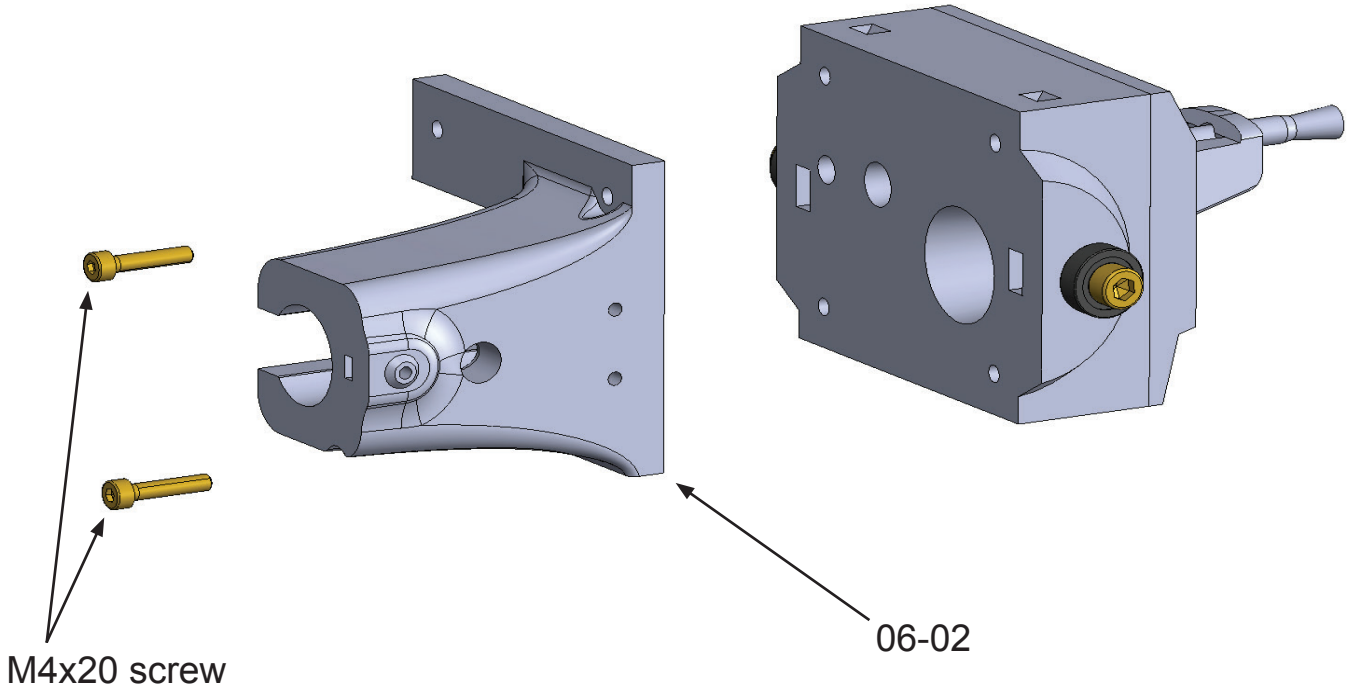

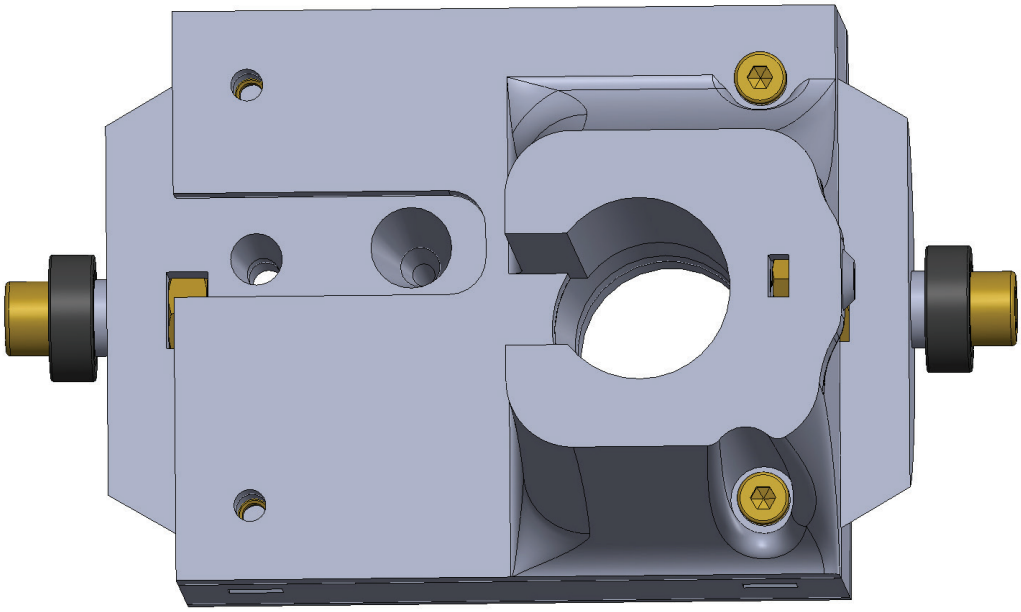

Join parts 06-01 and 06-02 with two M4x20 screws.

Assembly 06 - Cannon A - Version with levers

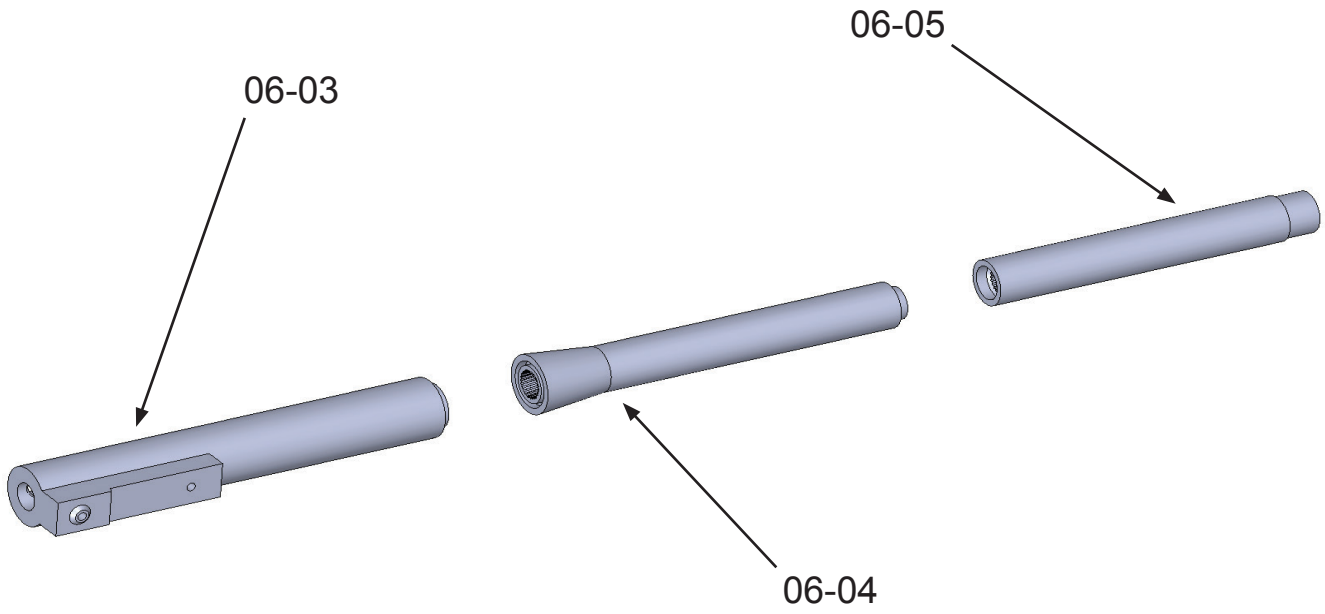

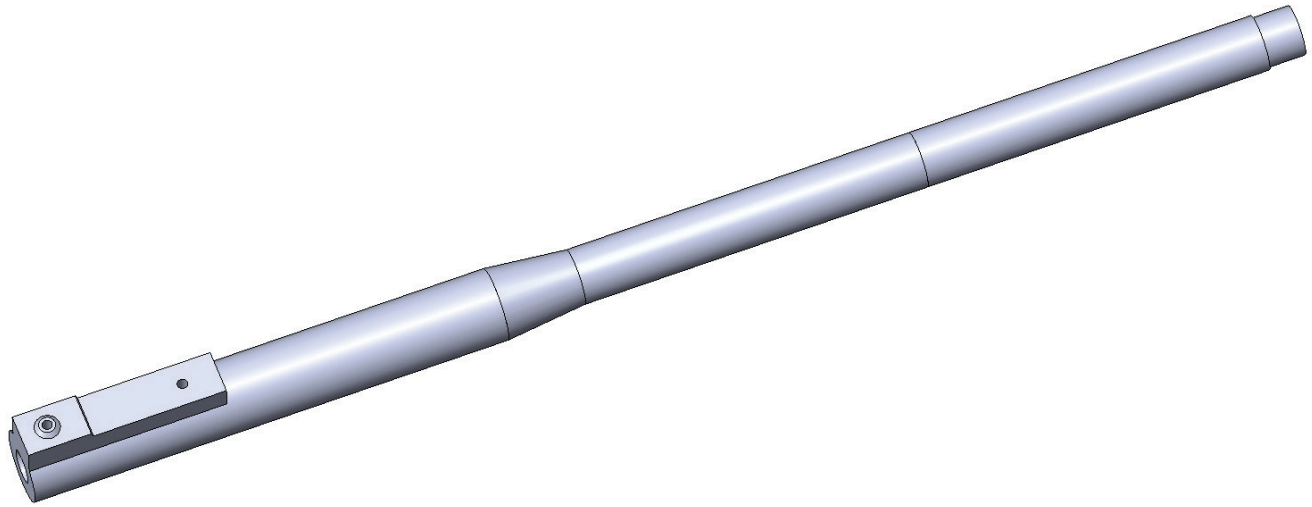

Glue parts 06-03, 06-04 and 06-05 together.

Assembly 06 - Cannon A - Version with levers

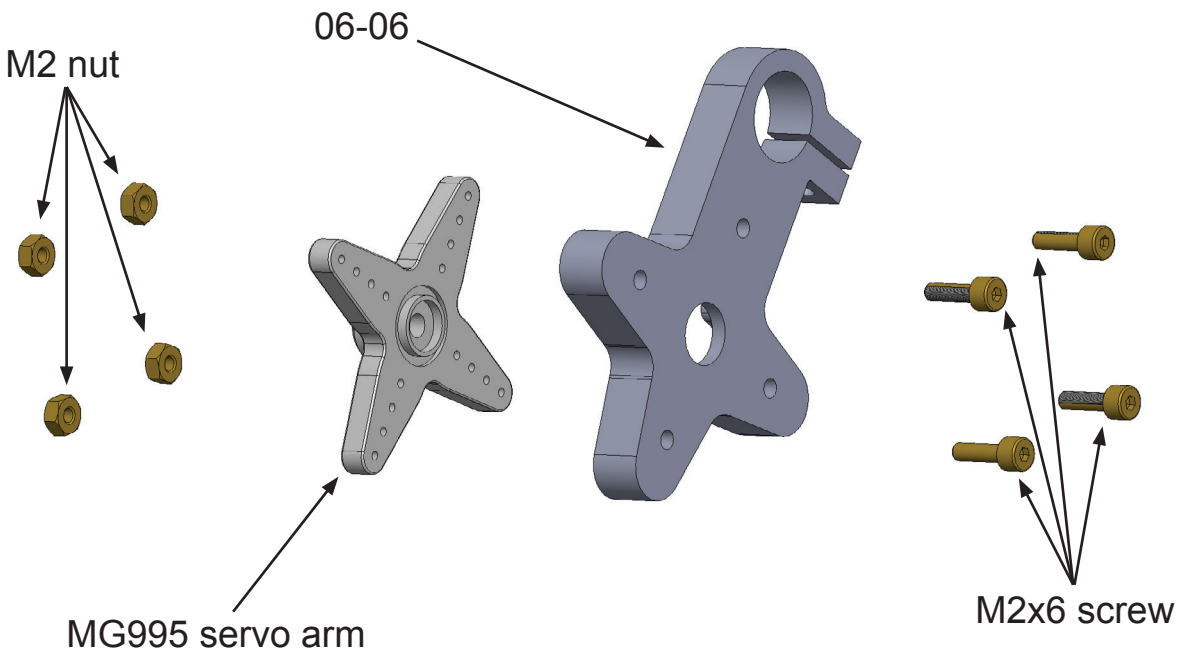

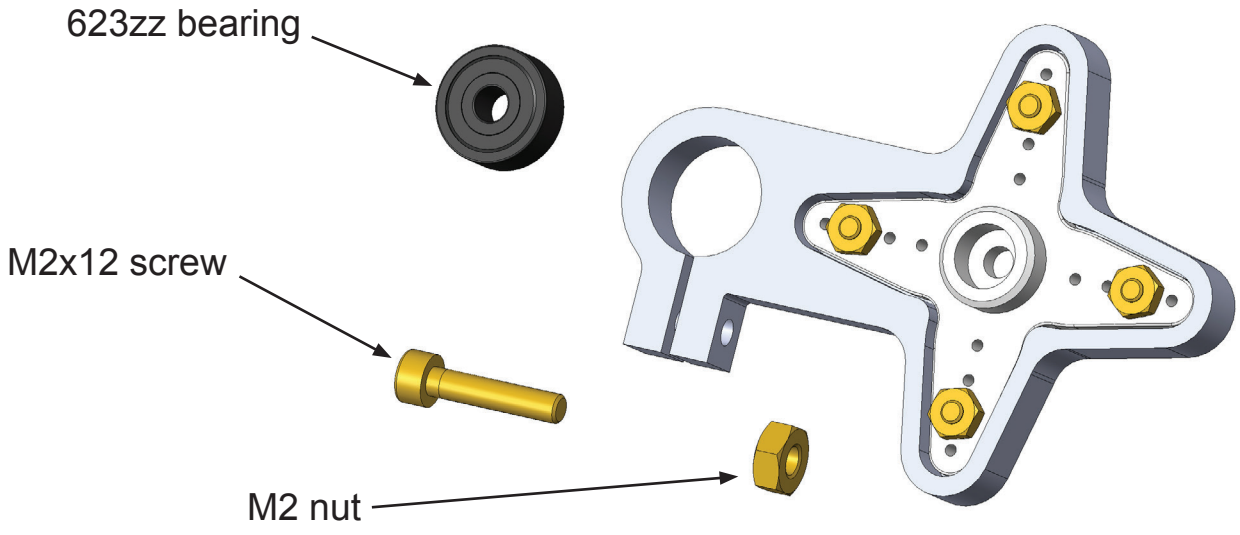

Attach part 06-06 to the MG995 servo arm.
Secure with four M2x6 screws and M2 nuts.Use drill if needed.
Put 623zz bearing into the part 06-06. Secure with M2x12 screw and M2 nut.

Assembly 06 - Cannon A - Version with levers

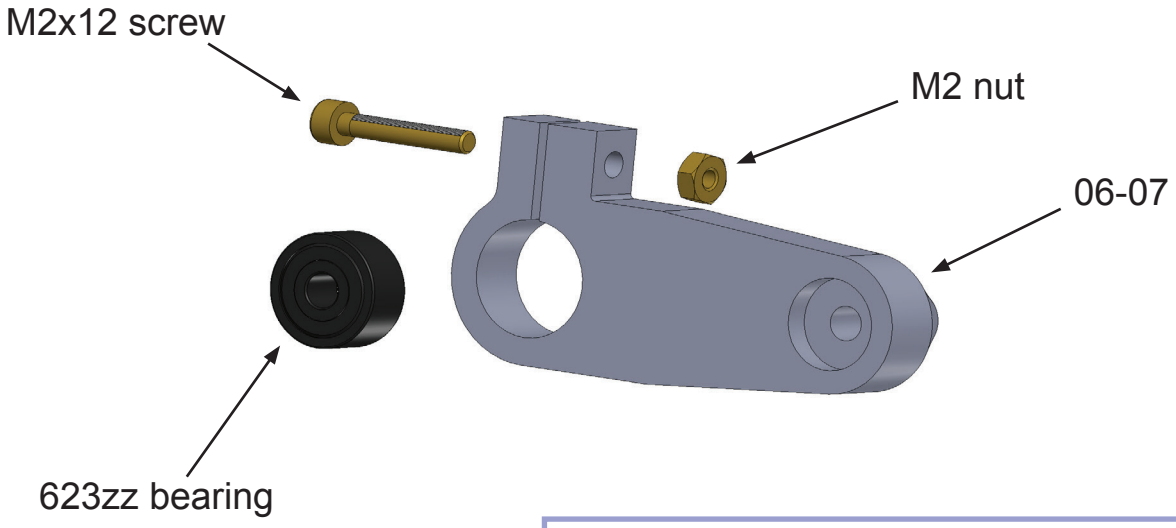

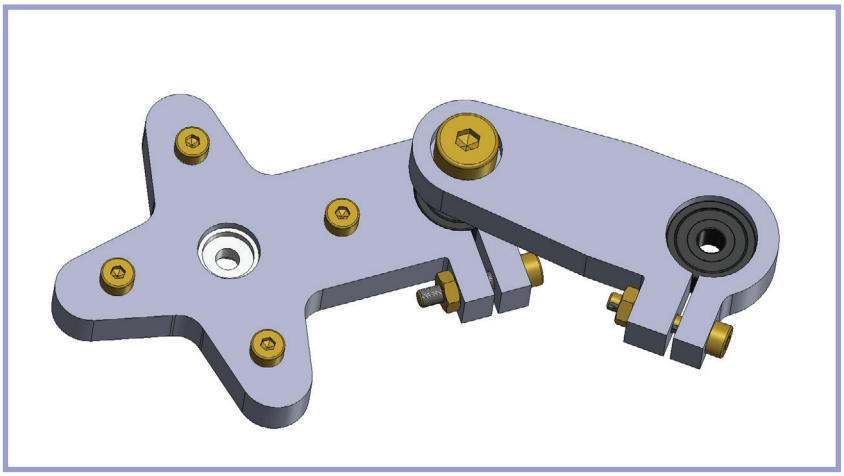

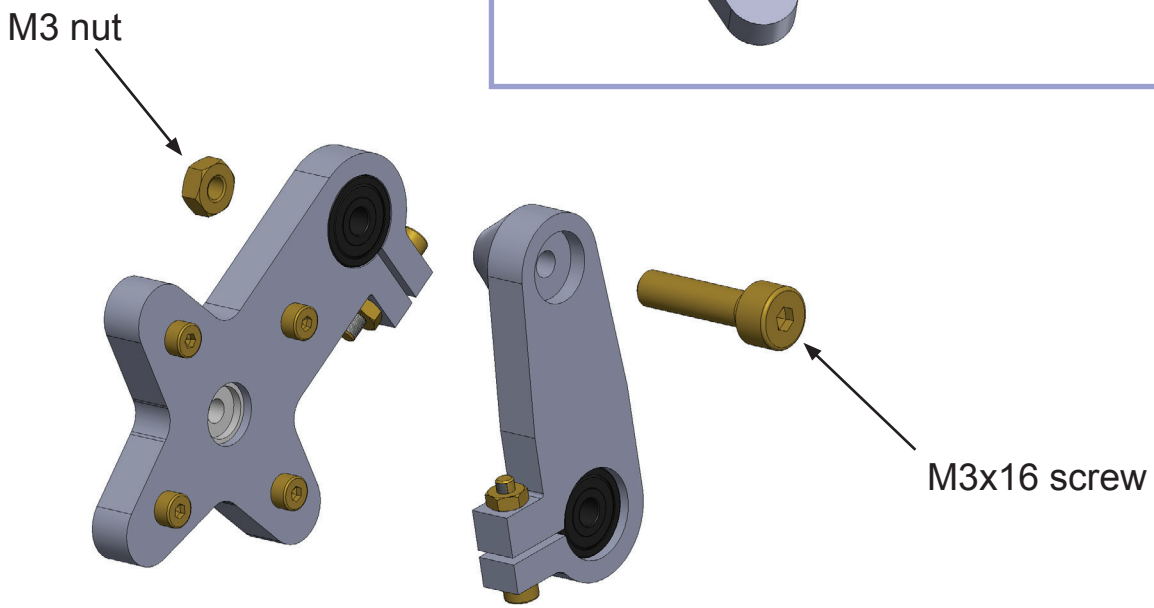

Put 623zz bearing into the part 06-07.Secure with M2x12 screw and M2 nut.
Attach the part 06-06. Use the M3x16 screw and M3 nut.
The arm must rotate freely. Secure the nut against falling out.

Assembly 06 - Cannon A - Version with levers

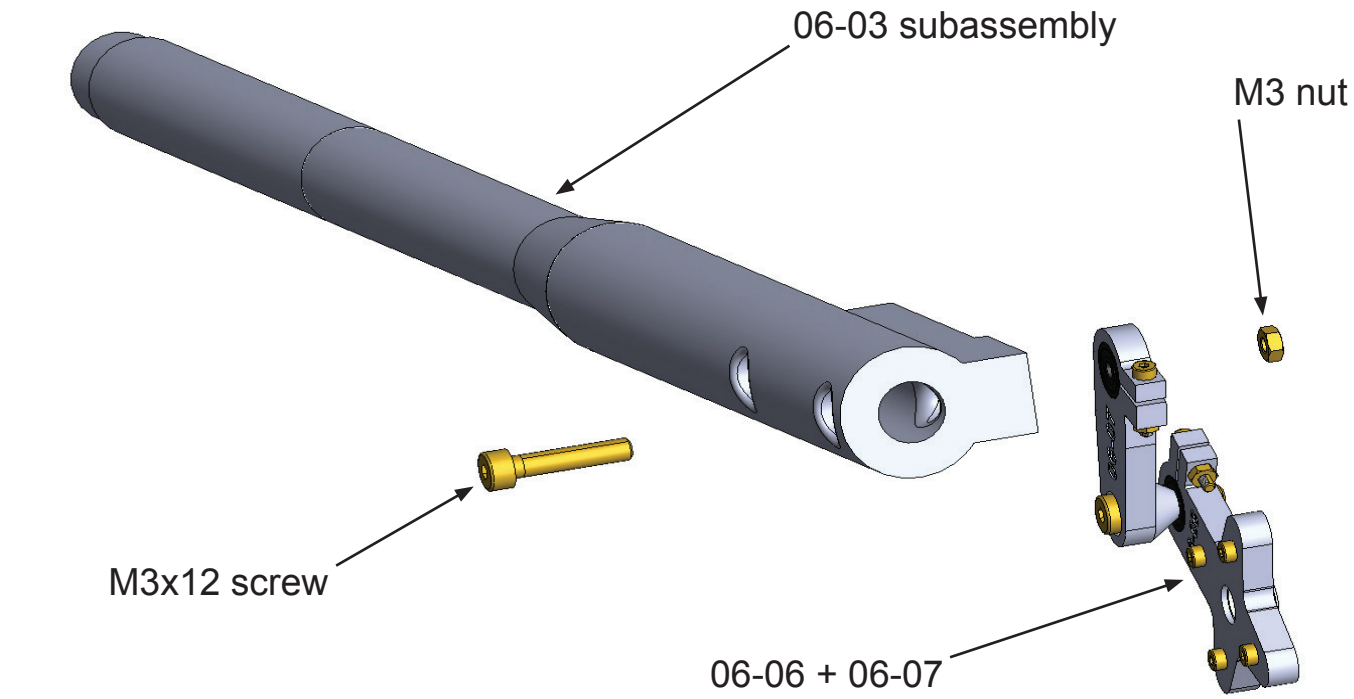

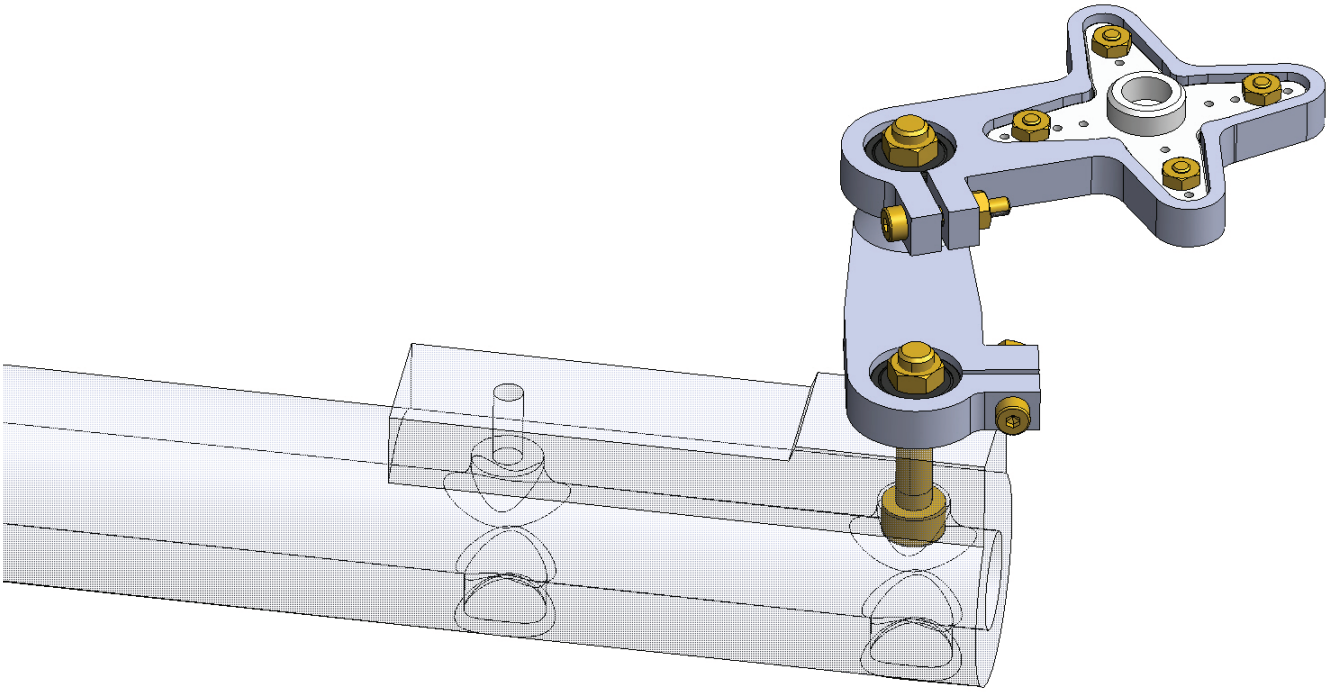

Attach part 06-07 into the part 06-03. Use M3x12 screw and M3 nut.
Part 06-07 must rotate freely. Secure the nut against falling out.

Assembly 06 - Cannon A - Version with levers

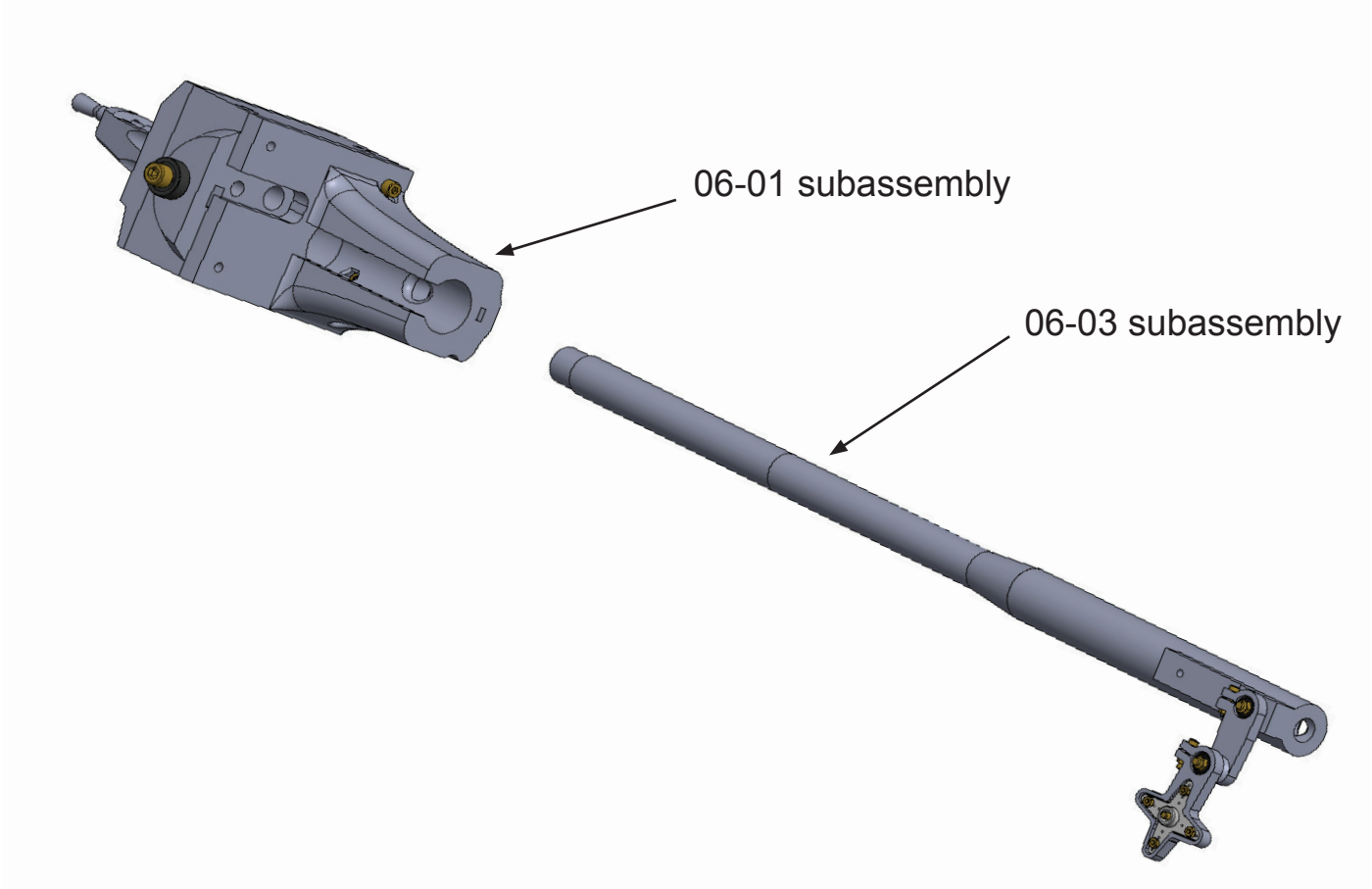

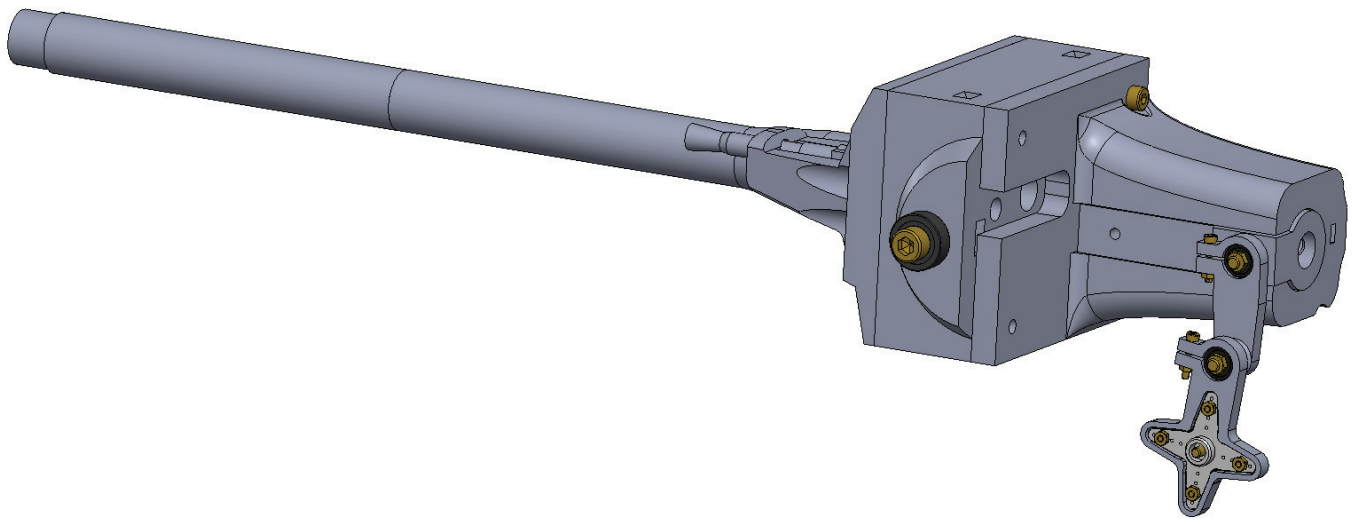

Insert subassembly 06-03. Do not glue the parts together.

Assembly 06 - Cannon A - Version with levers

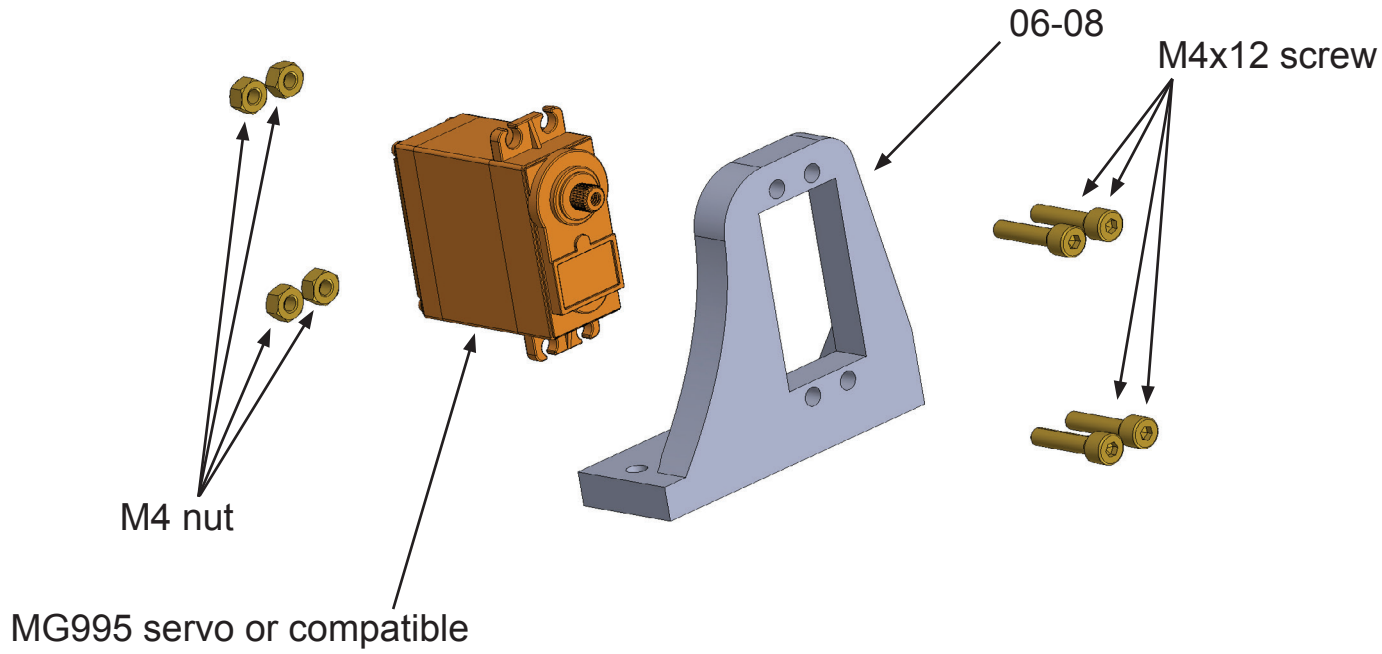

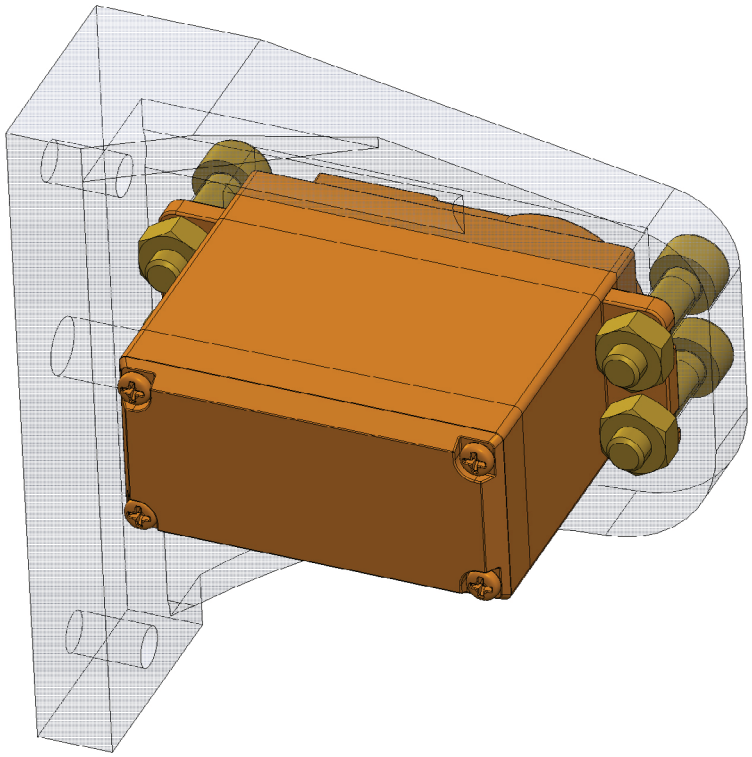

Attach a MG995 or other compatible servo to part 06-08.
Use 4 M4x12 screws and M4 nuts.

Assembly 06 - Cannon A - Version with levers

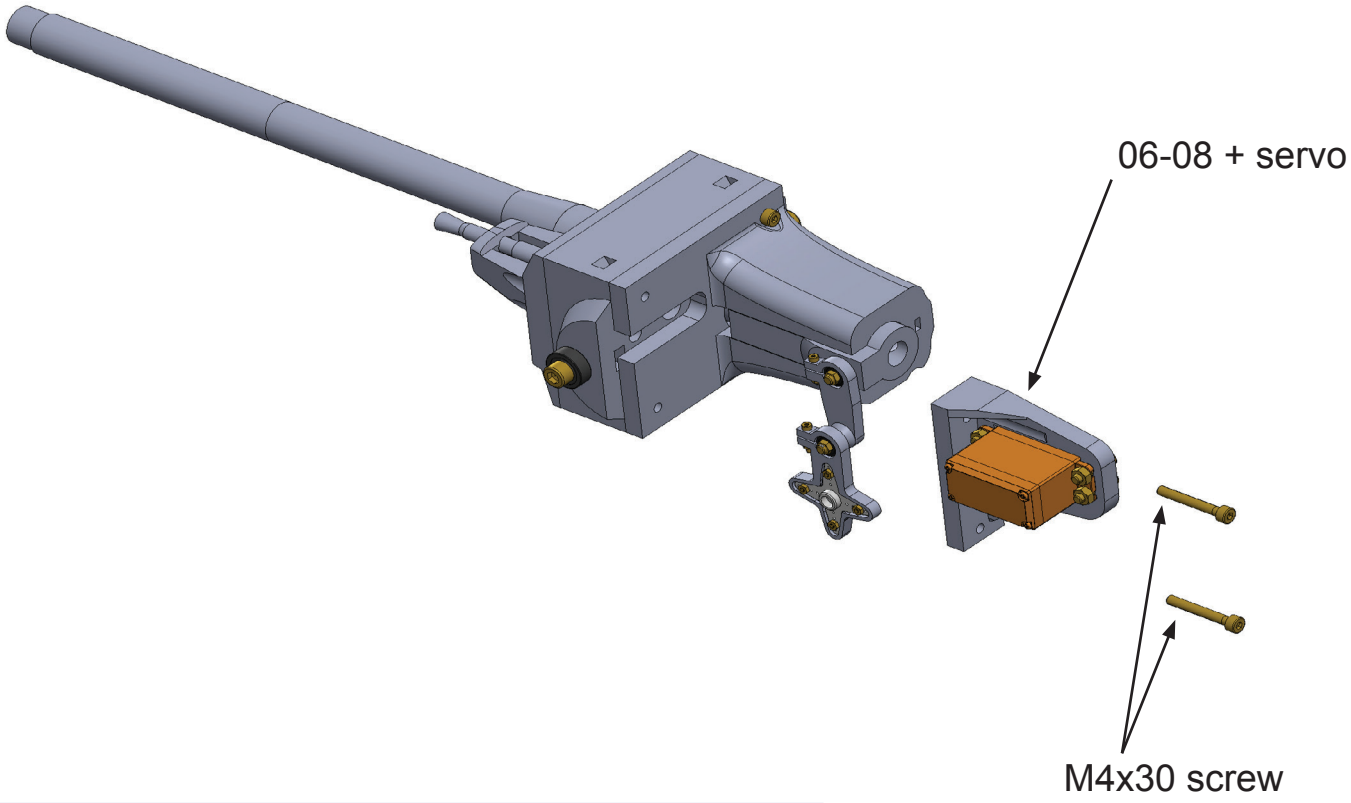

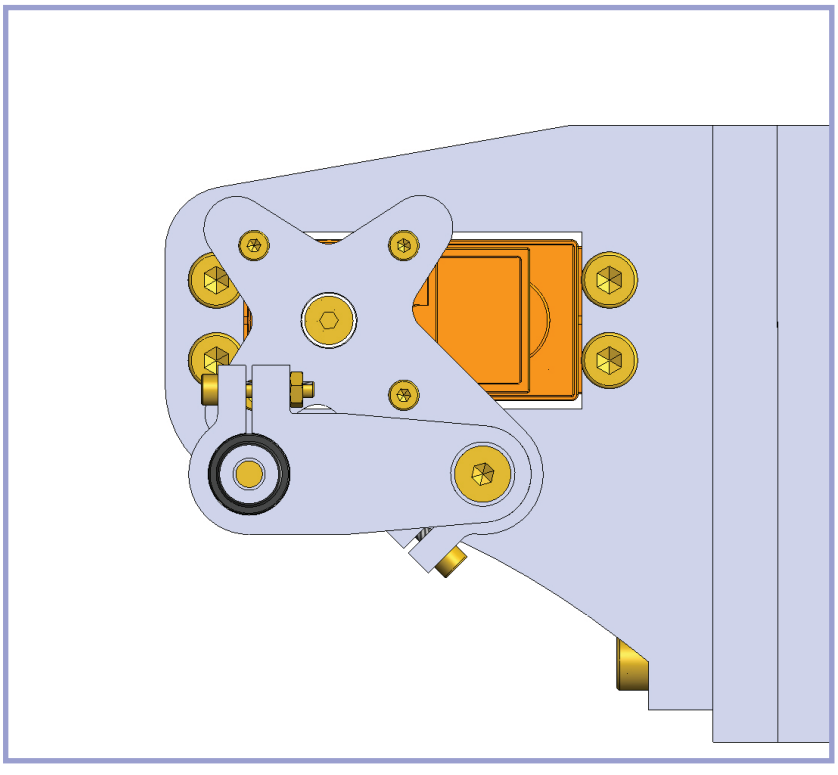

Fasten part 06-08 with two M4x30 screws.
Connect the arm to the servo.

Assembly 06 - Cannon A - Version with levers

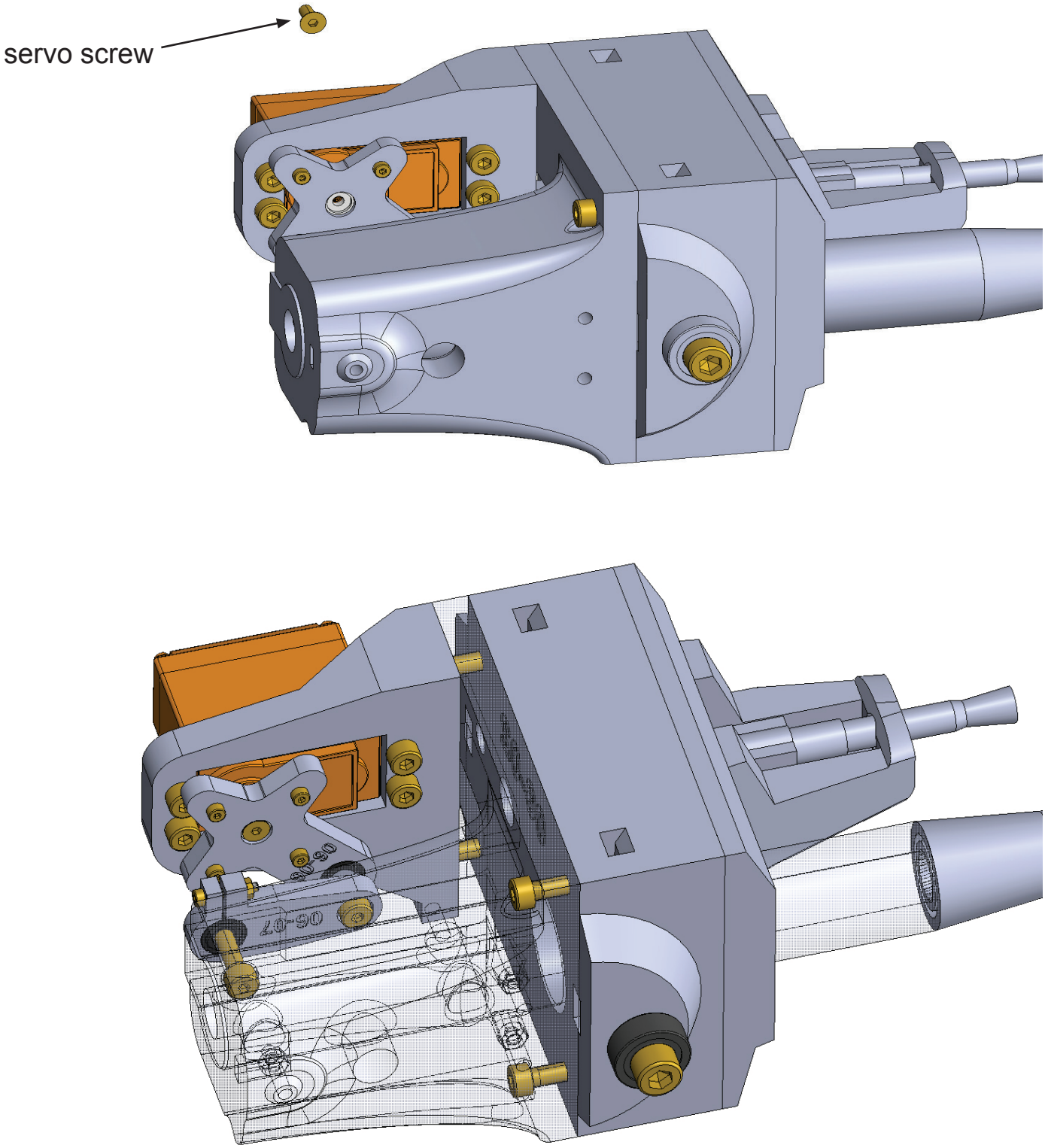

Correct position of the servo and arm in the zero/default position.
Part 06-07 is parallel to the cannon. The arm of the servo is at an angle of 45°.

Assembly 06 - Cannon A - Version with levers

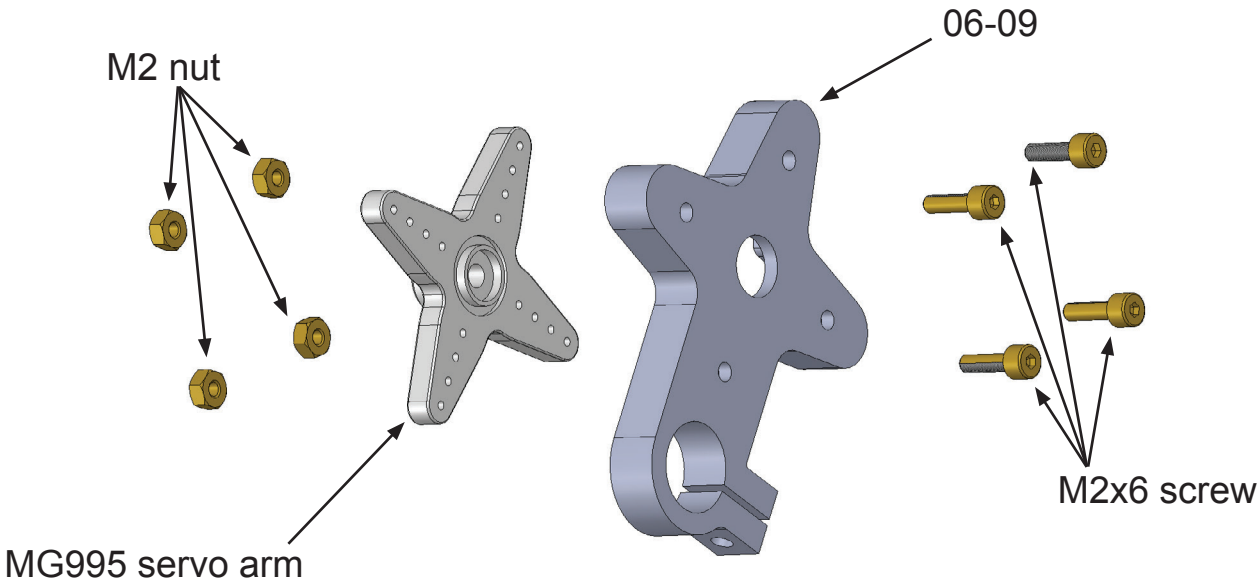

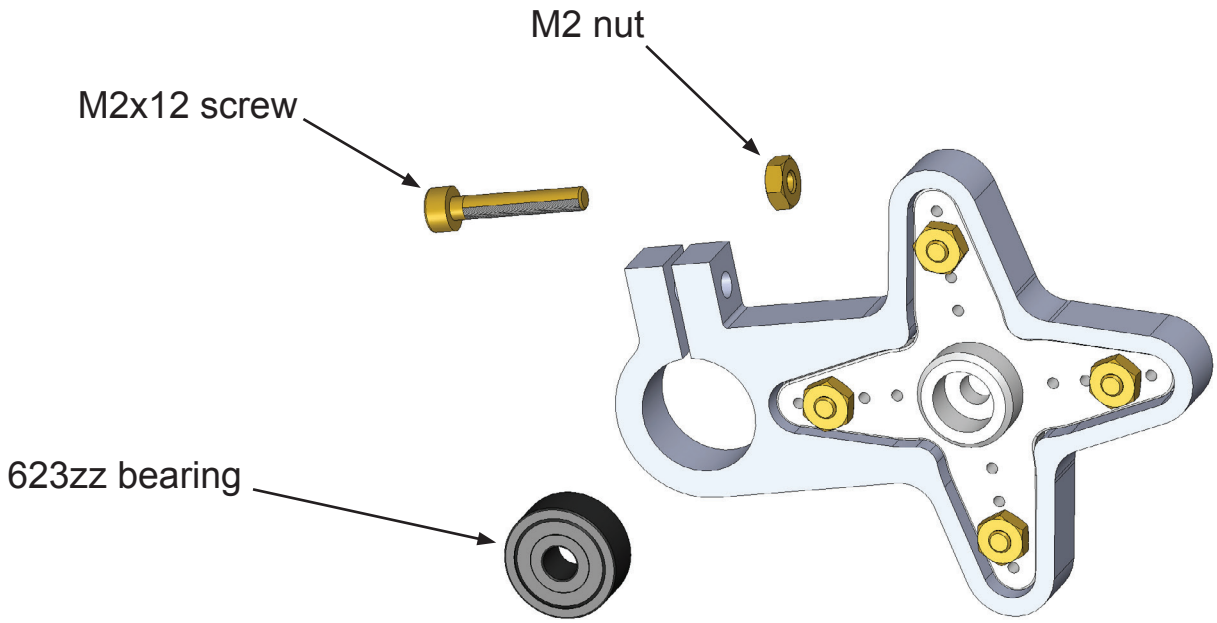

Attach part 06-09 to the MG995 servo arm.
Secure with four M2x6 screws and M2 nuts.Use drill if needed.
Put 623zz bearing into the part 06-09. Secure with M2x12 screw and M2 nut.

Assembly 06 - Cannon A - Version with levers

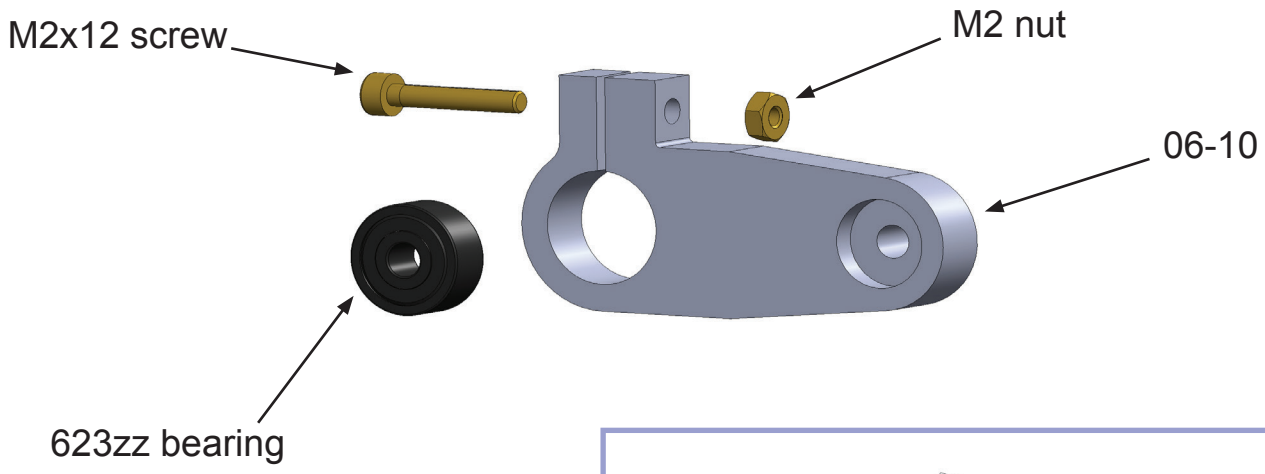

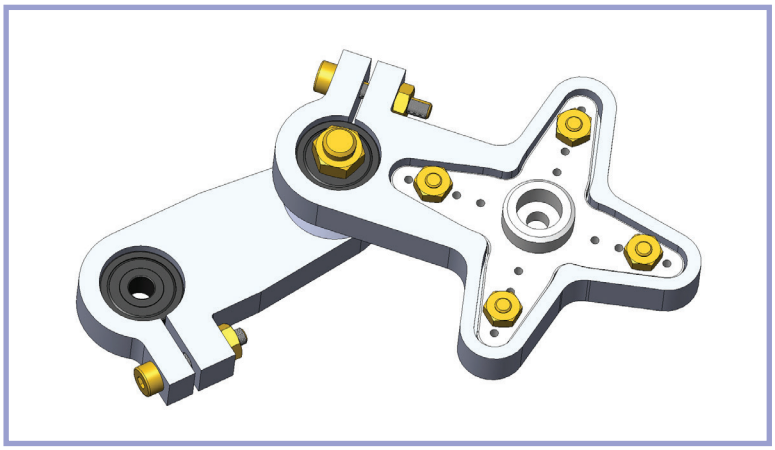

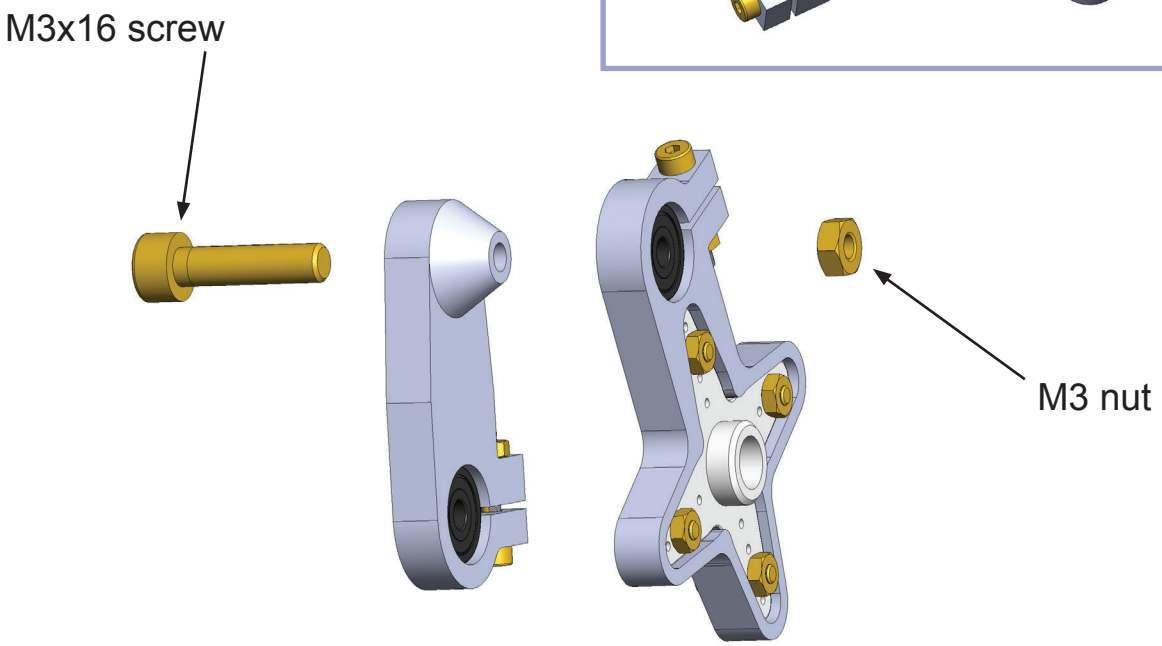

Put 623zz bearing into the part 06-10.Secure with M2x12 screw and M2 nut.
Attach the part 06-09. Use the M3x16 screw and M3 nut.
The arm must rotate freely. Secure the nut against falling out.

Assembly 06 - Cannon A - Version with levers

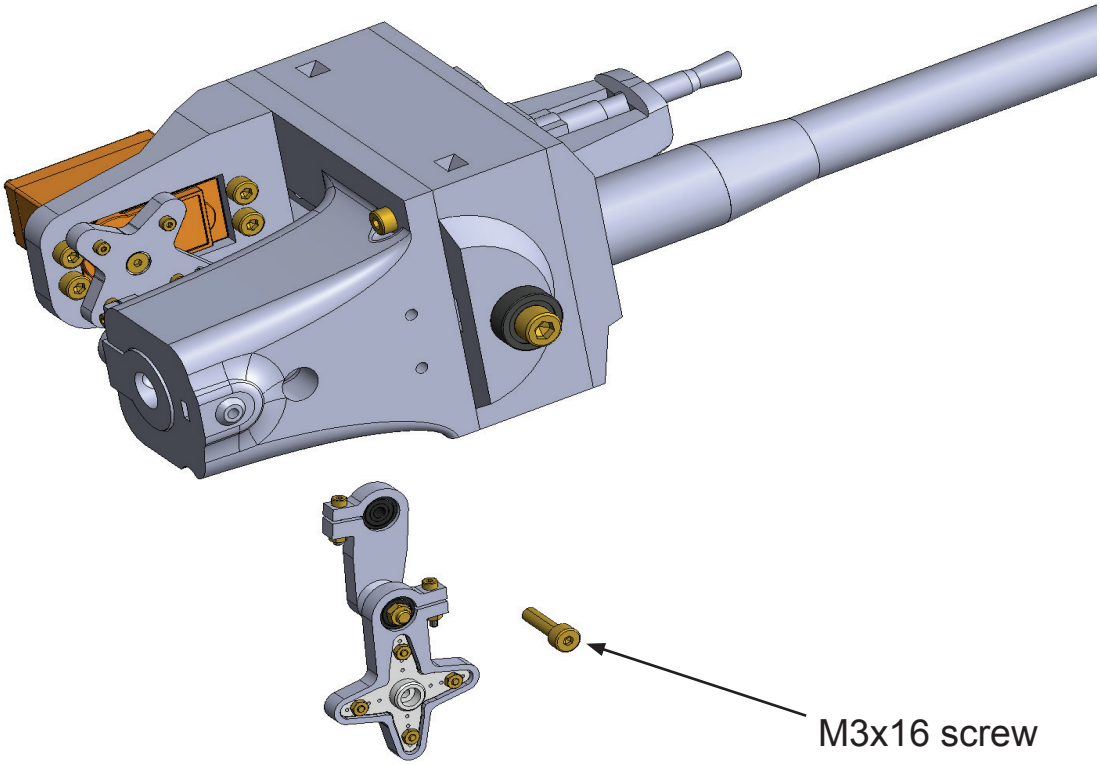

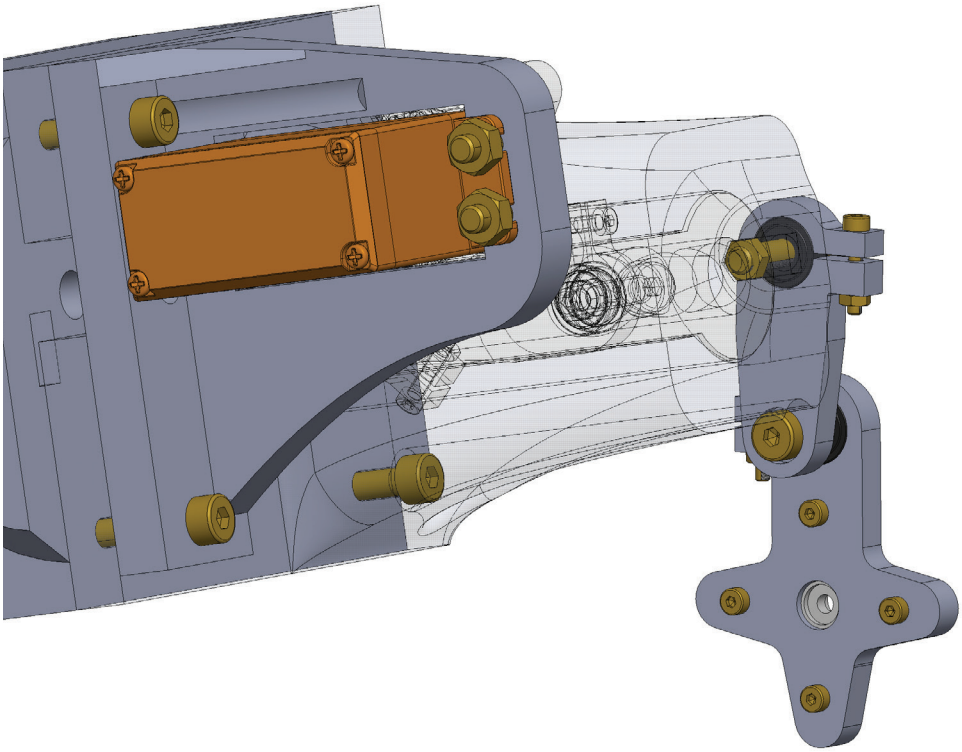

Attach part 06-10 to part 06-02 using M4x16 screw.
The arm must rotate freely.

Assembly 06 - Cannon A - Version with levers

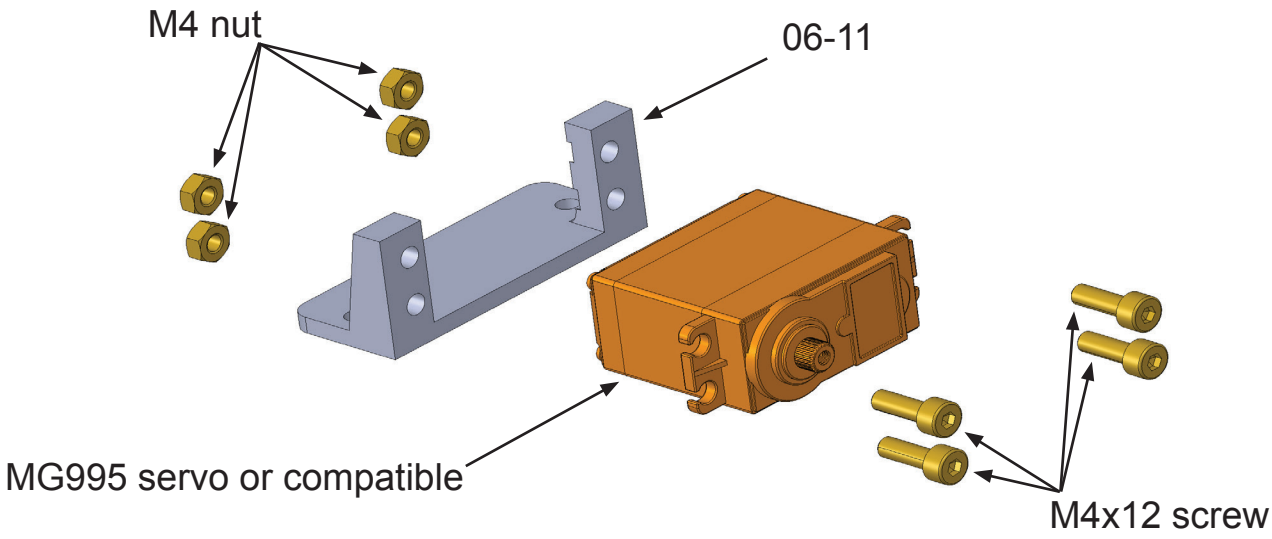

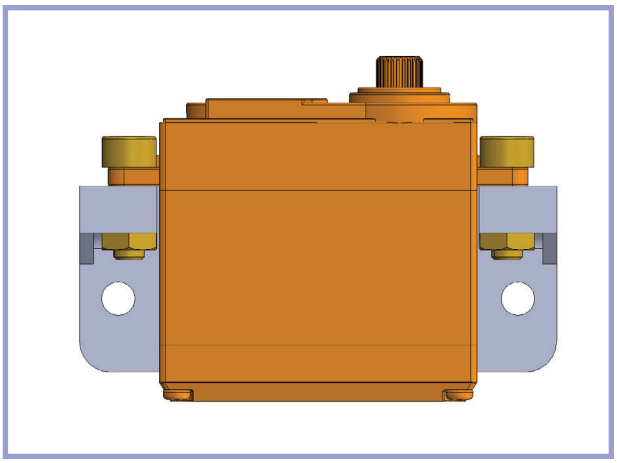

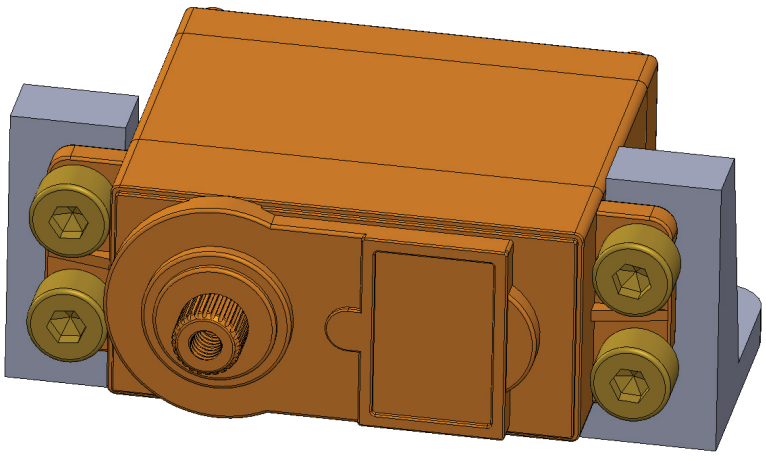

Attach a MG995 or other compatible servo to part 06-11.
Use 4 M4x12 screws and M4 nuts.

Assembly 06 - Cannon A - Version with levers

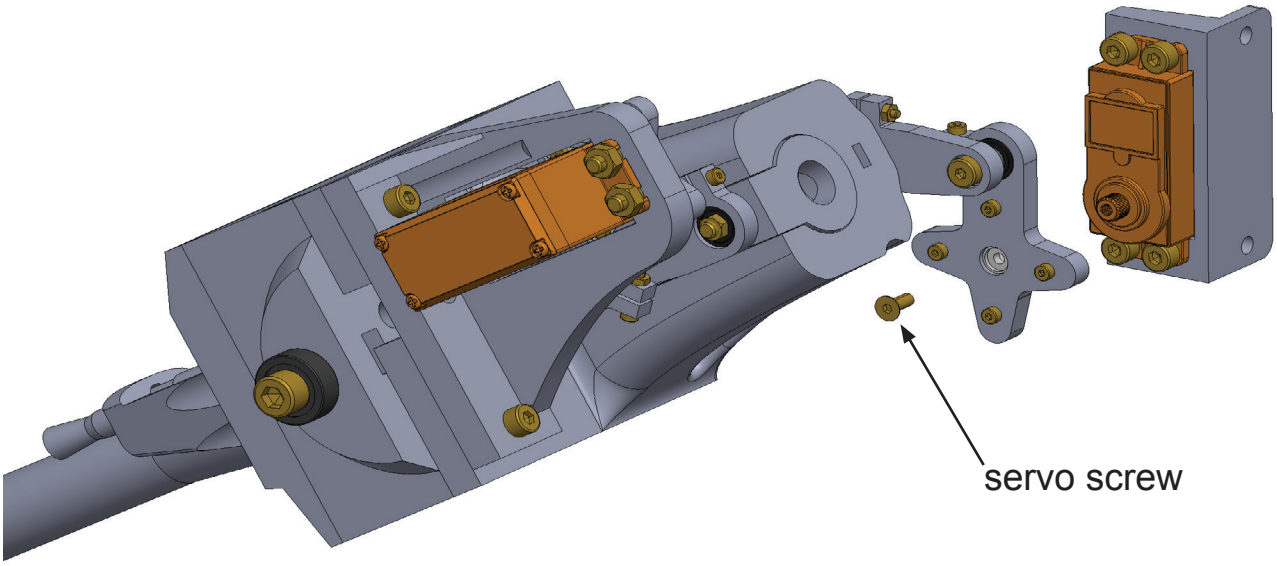

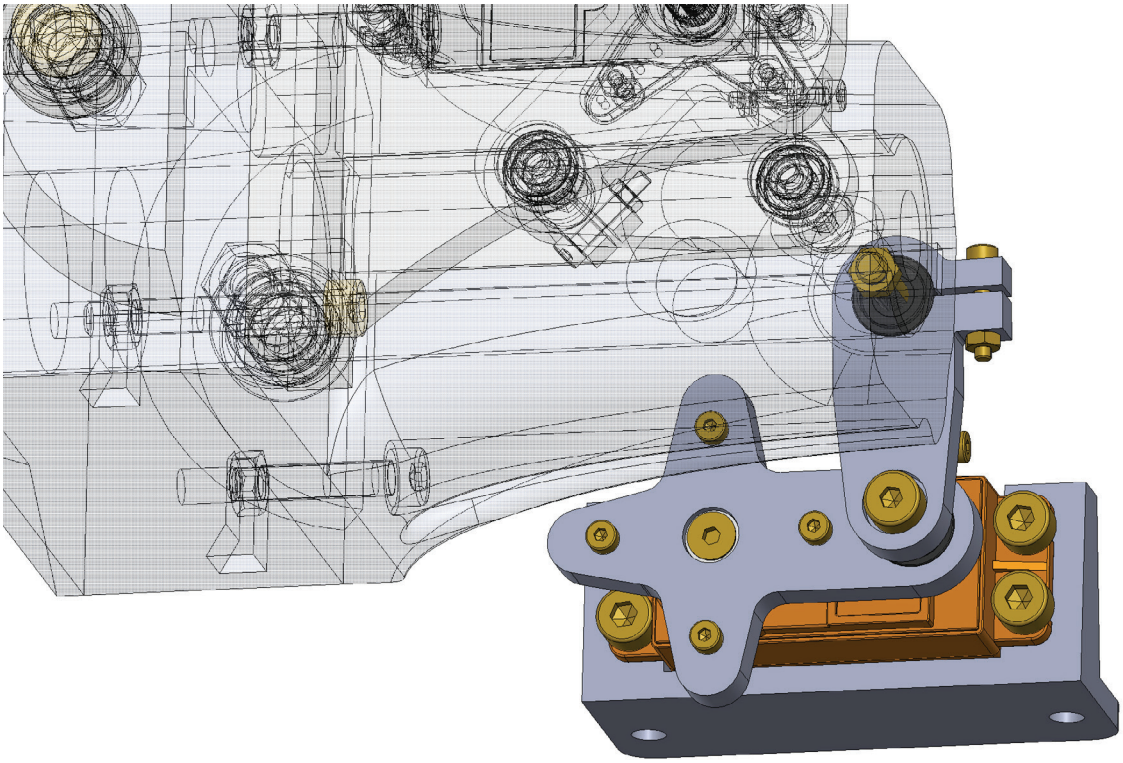

Prepare part 06-11 together with the servo.
Connect the arm to the servo using the screw provided.
The screw is part of the servomotor package.

Assembly 06 - Cannon A - Version with levers

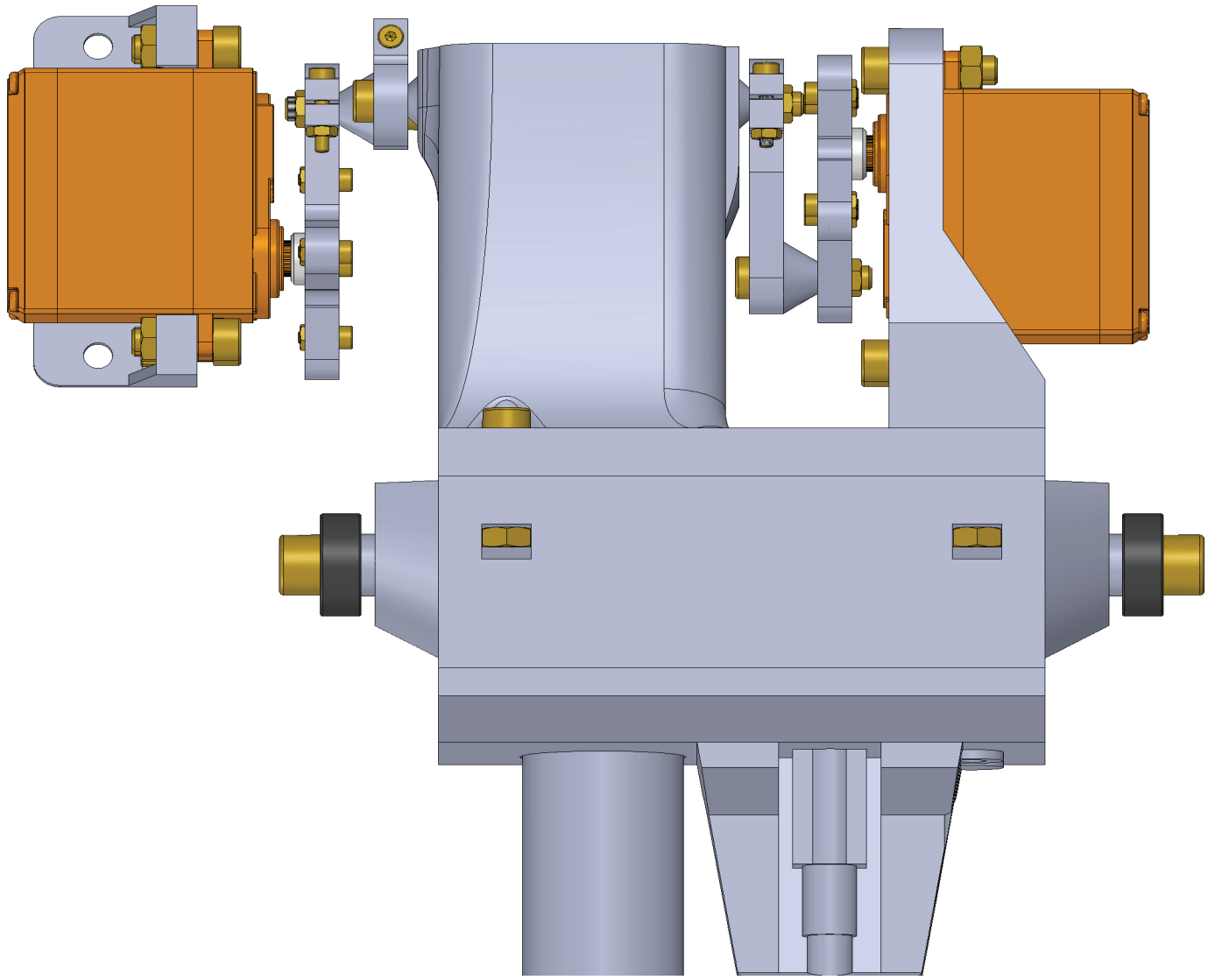

Correct position of the servo and arm in the zero/default position.
Part 06-10 is perpendicular to the cannon.
The arm of the servo is parallel to the cannon.

Assembly 06 - Cannon A - Version with levers

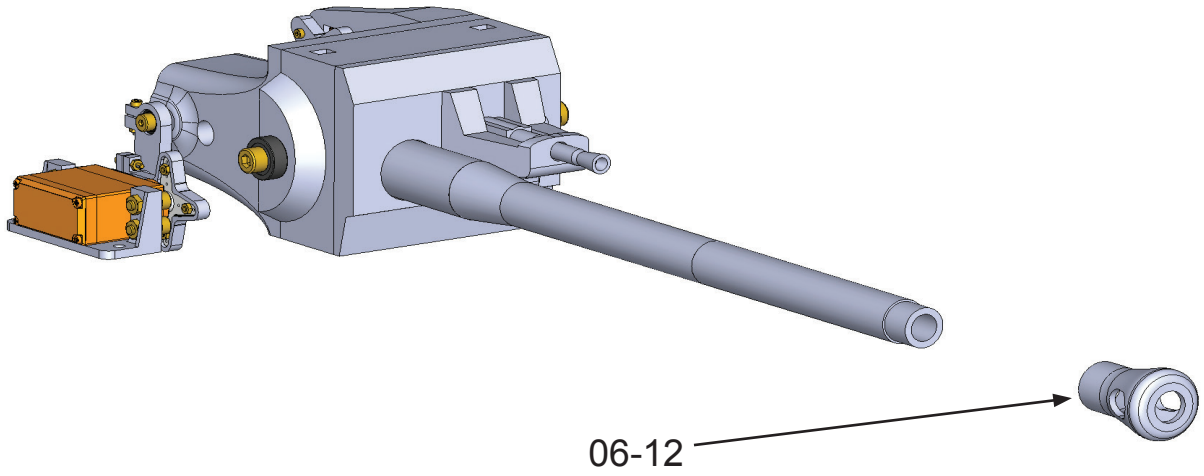

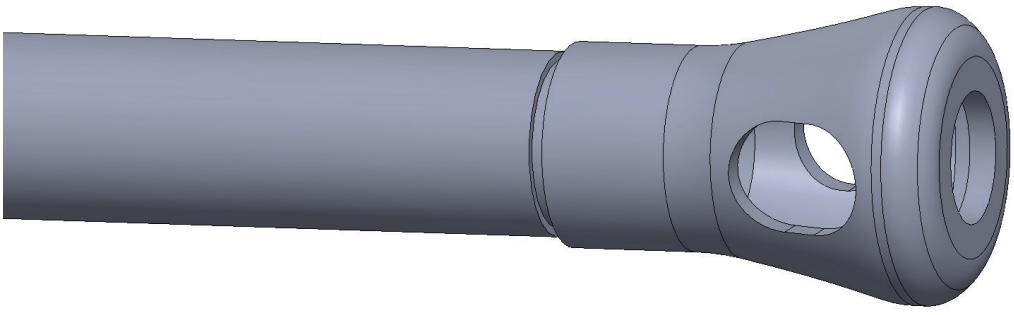

Complete the cannon by adding part 06-12.
Attach the part so that it can be detached in the future.
In case of service, the part will have to be detached.

Assembly 06 - Cannon A - Version with levers

Assembly 06 - Cannon B - Version with gears

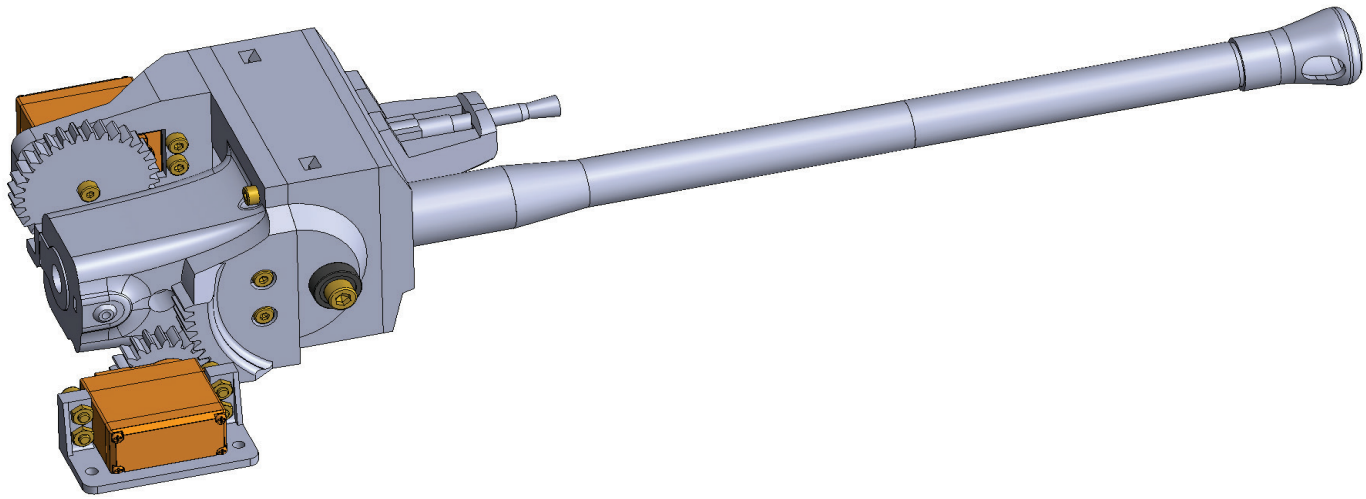

3D PRINTED PARTS:	06-01A (1x), 06-01B (1x), 06-02 (1x), 06-03 (1x), 06-04 (1x), 06-05 (1x), 06-06_alt (1x), 06-07_alt (1x), 06-08_alt (1x), 06-09_alt (1x), 06-10_alt (1x), 06-11_alt (1x), 06-12 (1x), 06-13 (2x).
OPTIONAL 3D PRINTED PARTS:	06-01AB (1x)
NON-PRINTED PARTS:	M6 nut (2x), M4 nut (12x), M3 nut (4x), M6x20mm screw (2x), M4x30mm screw (2x), M4x20mm screw (2x), M4x16mm screw (4x), M4x12mm screw (4x) - alternatively you can use M4x16mm instead of M4x12mm. M3x16mm screw (4x), M3x8mm screw (2x), MG995 servo with arm (2x), 606zz bearing (2x).

Assembly 06 - Cannon B - Version with gears

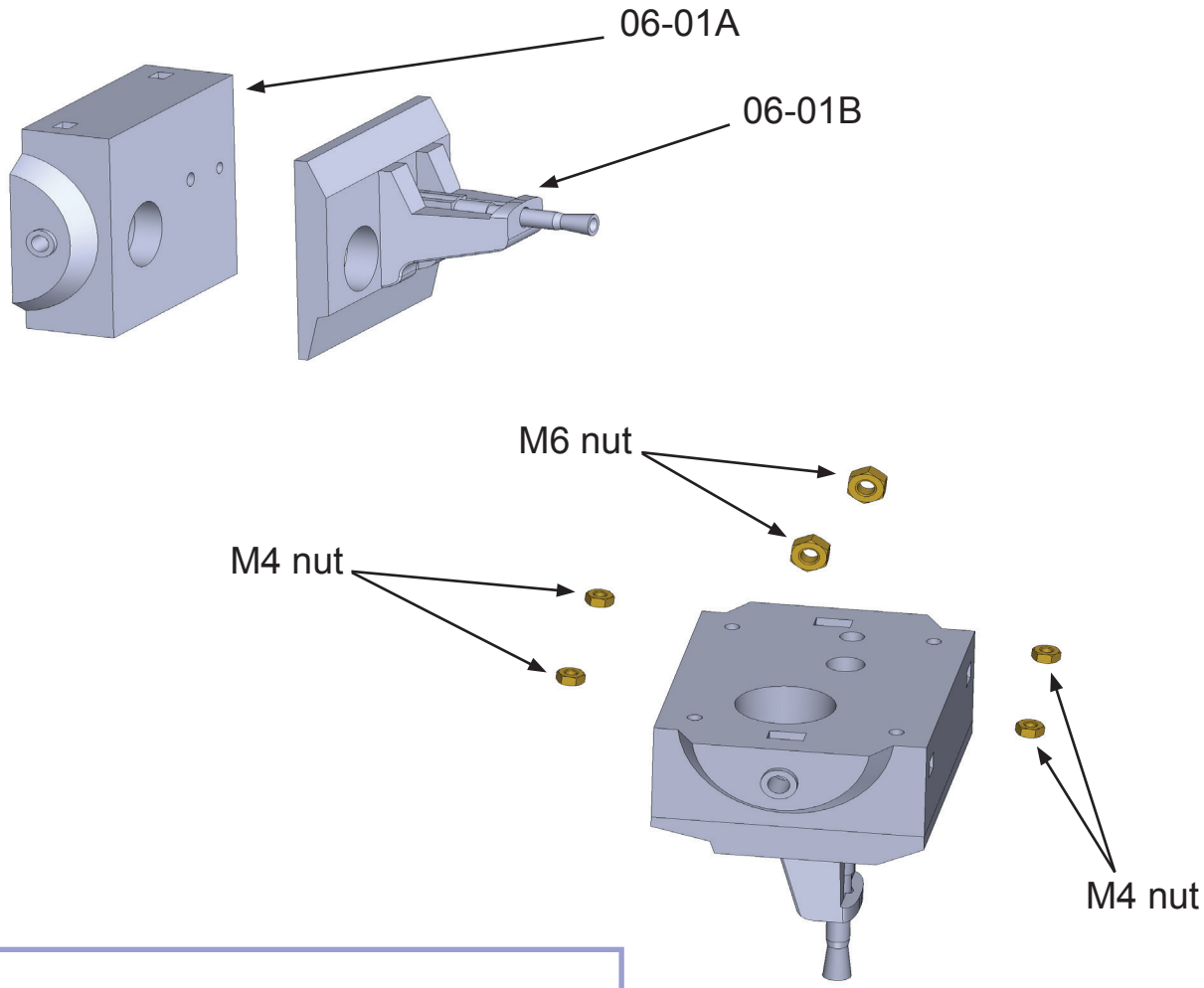

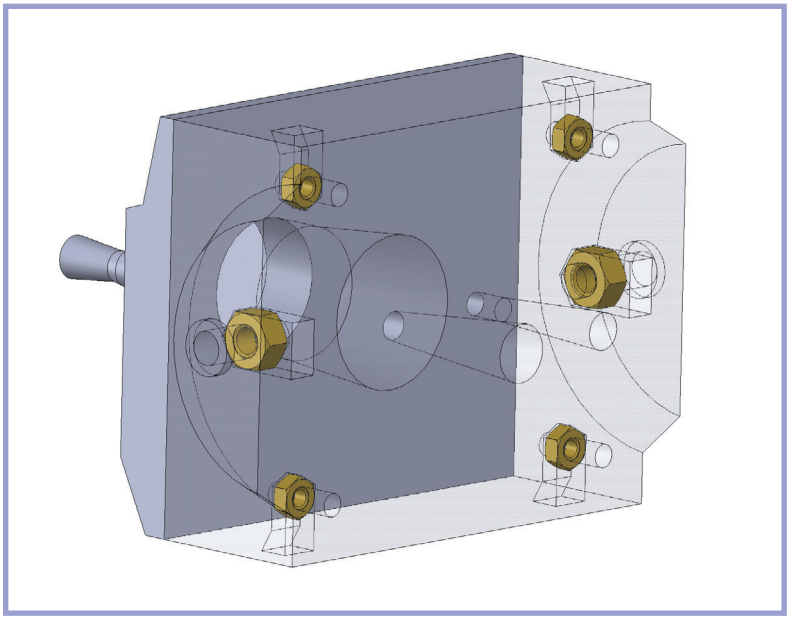

Glue parts 06-01A and 06-01B together.
You can skip this step if you are printing part 06-01AB.
Insert two M6 nuts and 4 M4 nuts into the part.

Assembly 06 - Cannon B - Version with gears

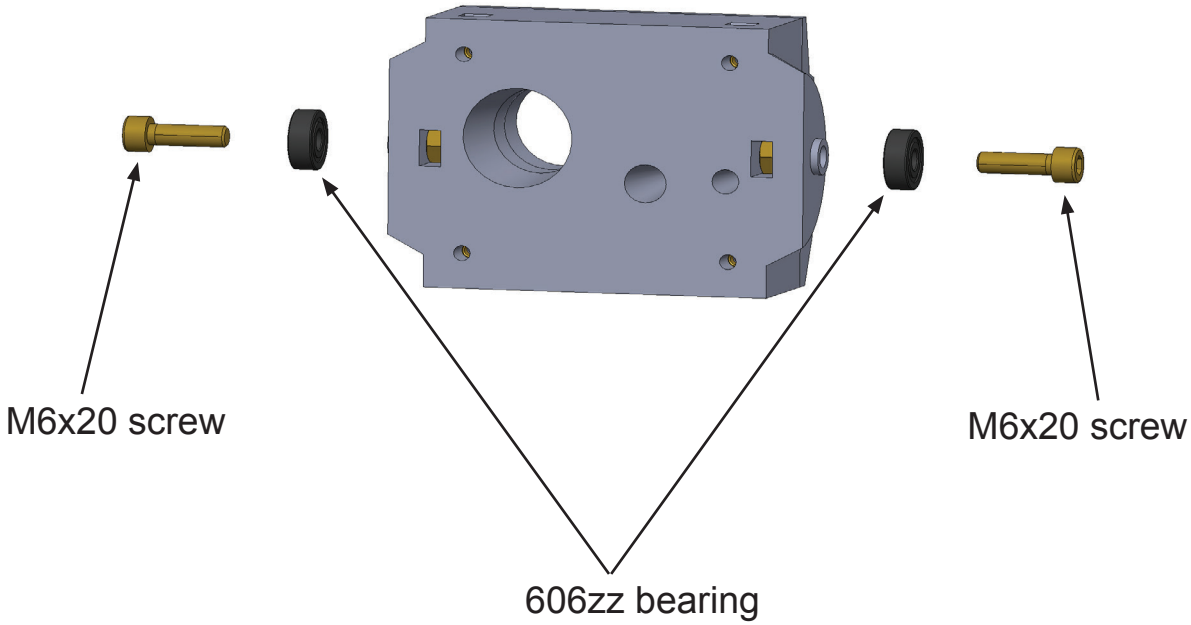

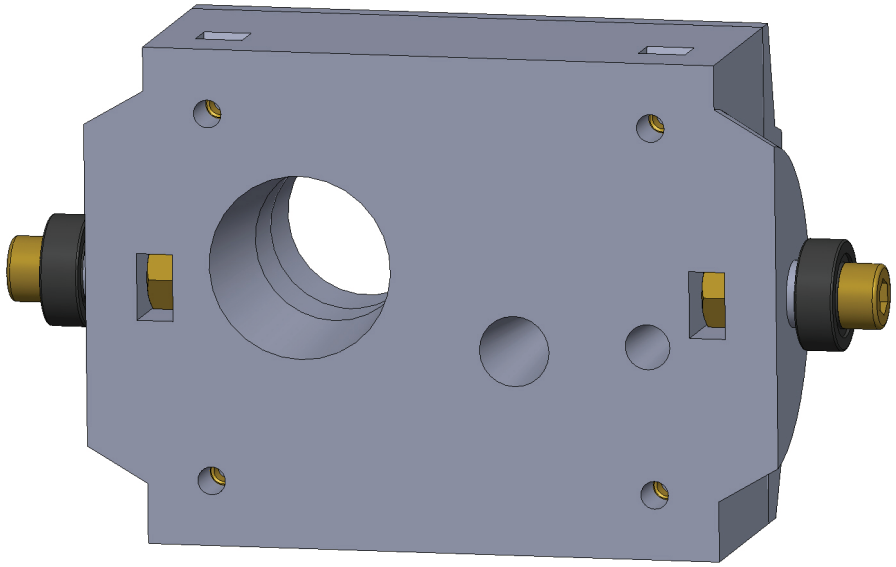

Attach two 606zz bearings with M6x20 screws.

Assembly 06 - Cannon B - Version with gears

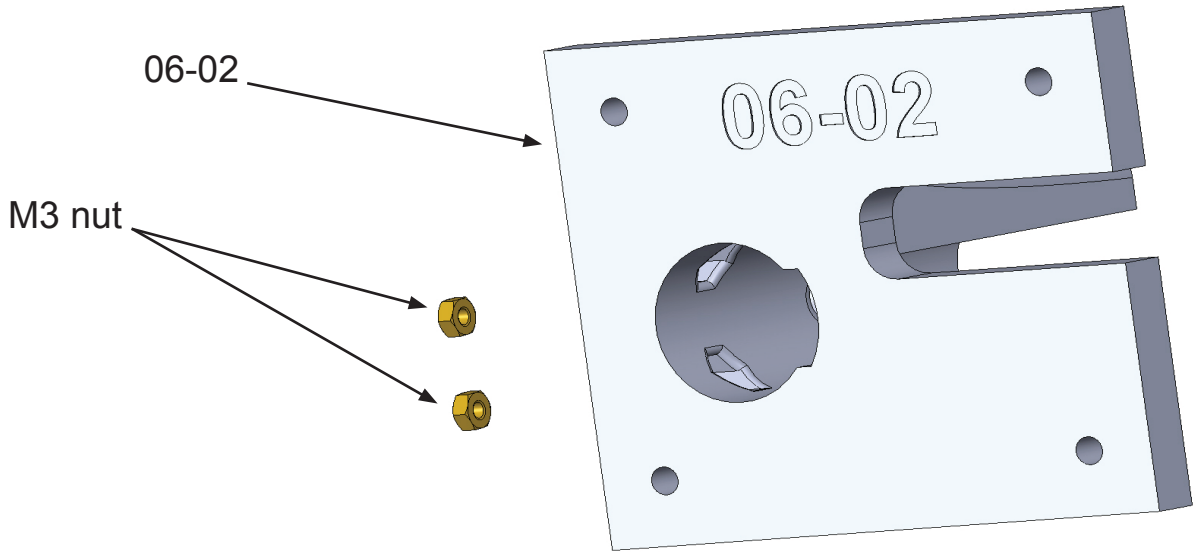

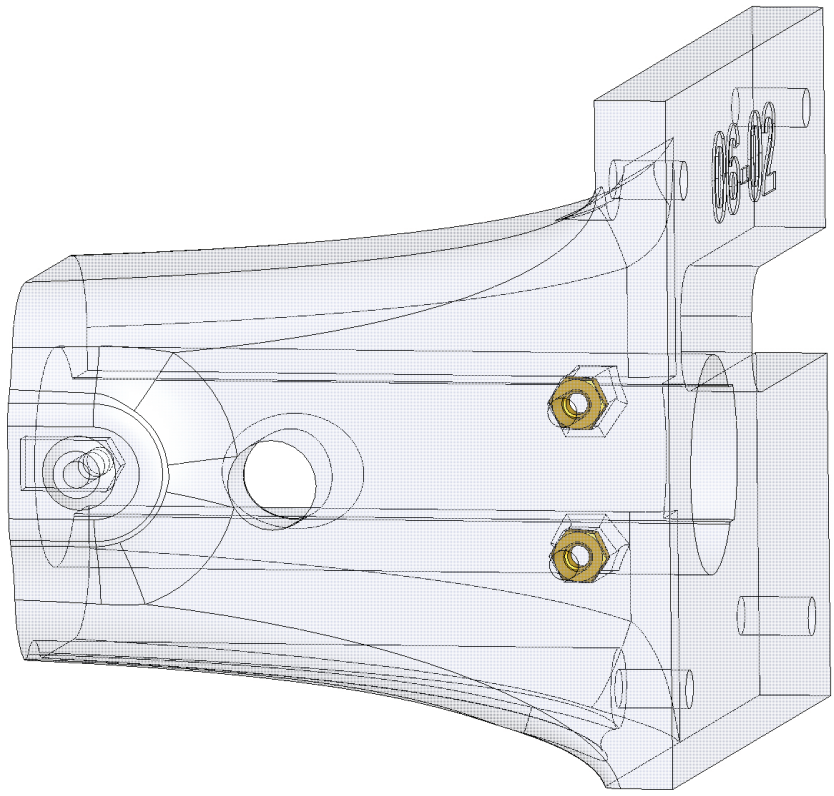

Insert two M3 nuts into part 06-02.

Assembly 06 - Cannon B - Version with gears

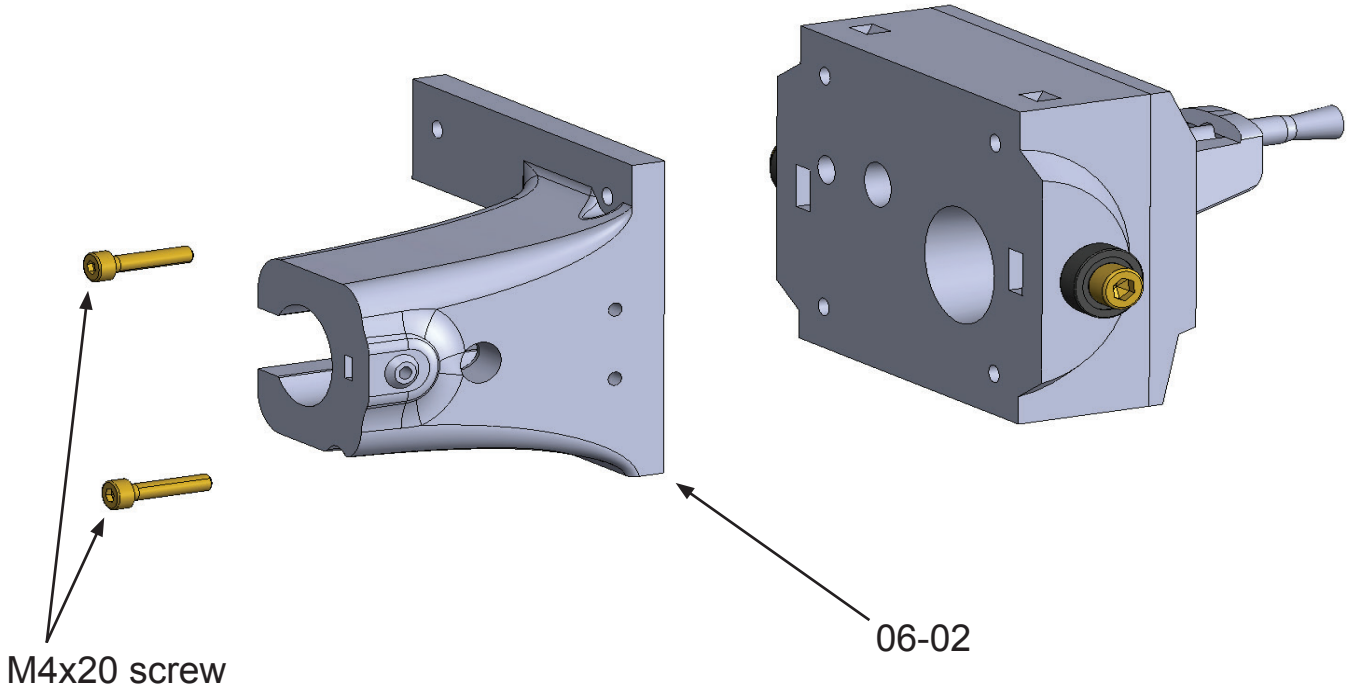

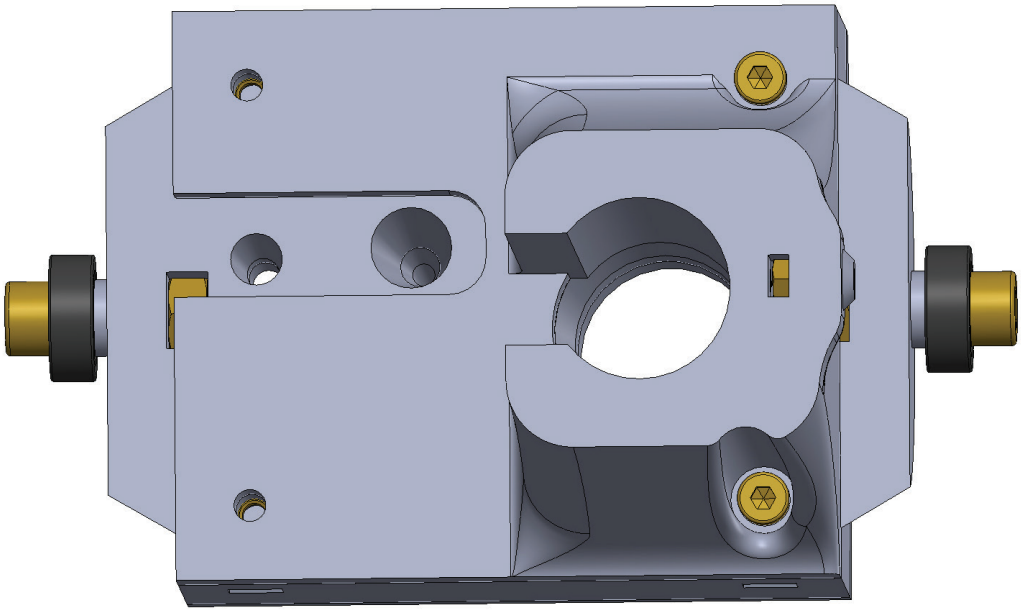

Join parts 06-01 and 06-02 with two M4x20 screws.

Assembly 06 - Cannon B - Version with gears

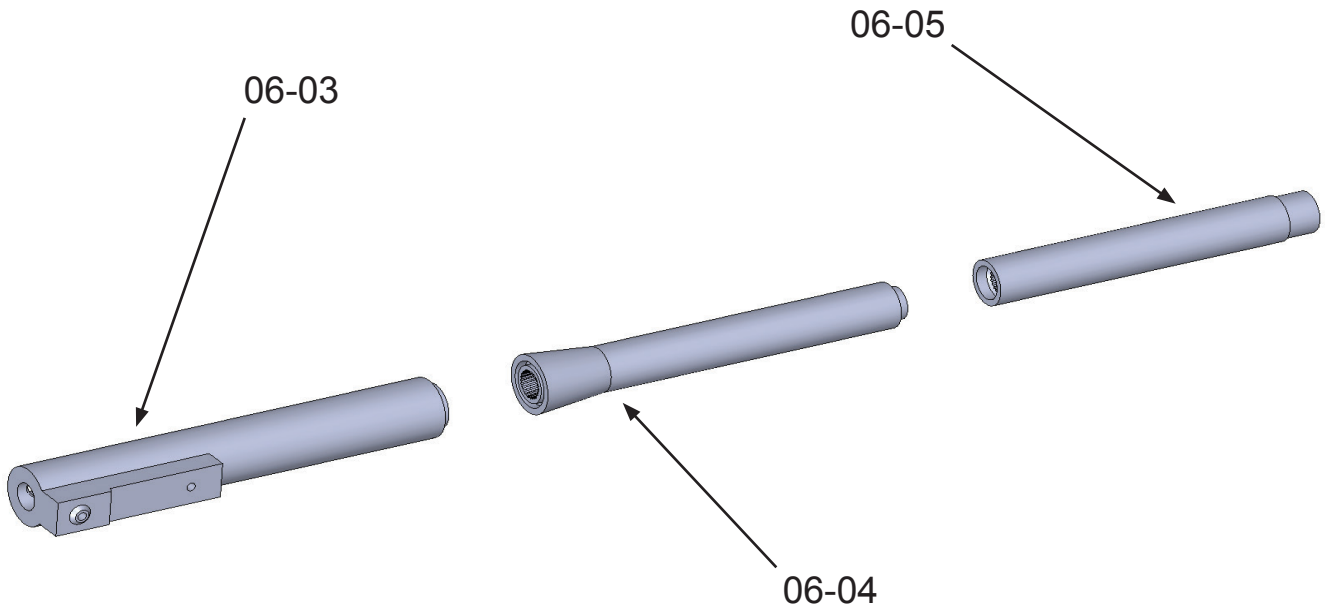

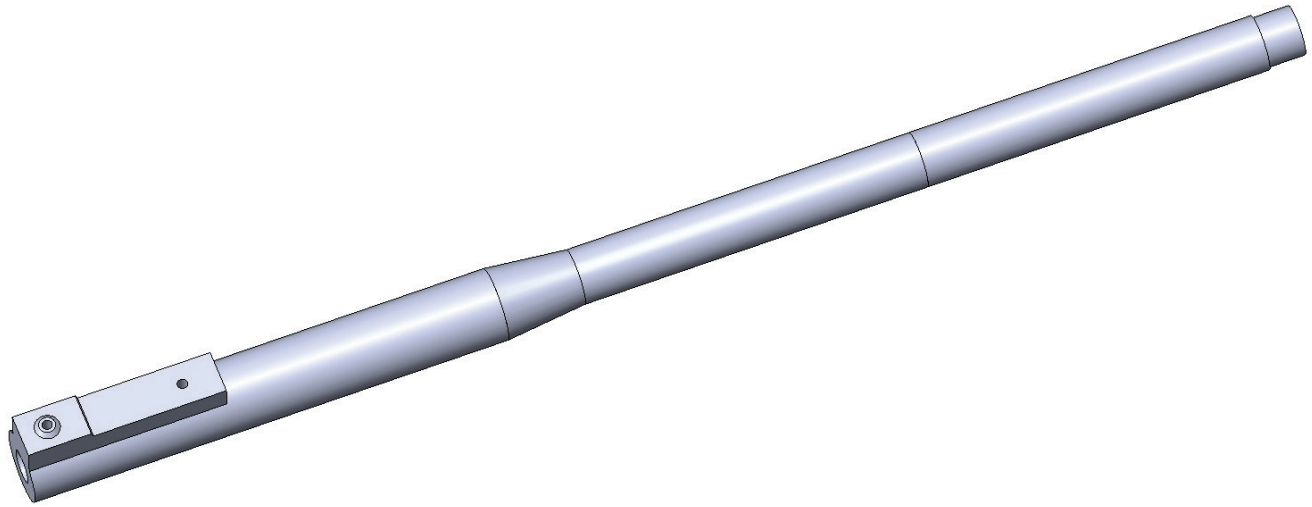

Glue parts 06-03, 06-04 and 06-05 together.

Assembly 06 - Cannon B - Version with gears

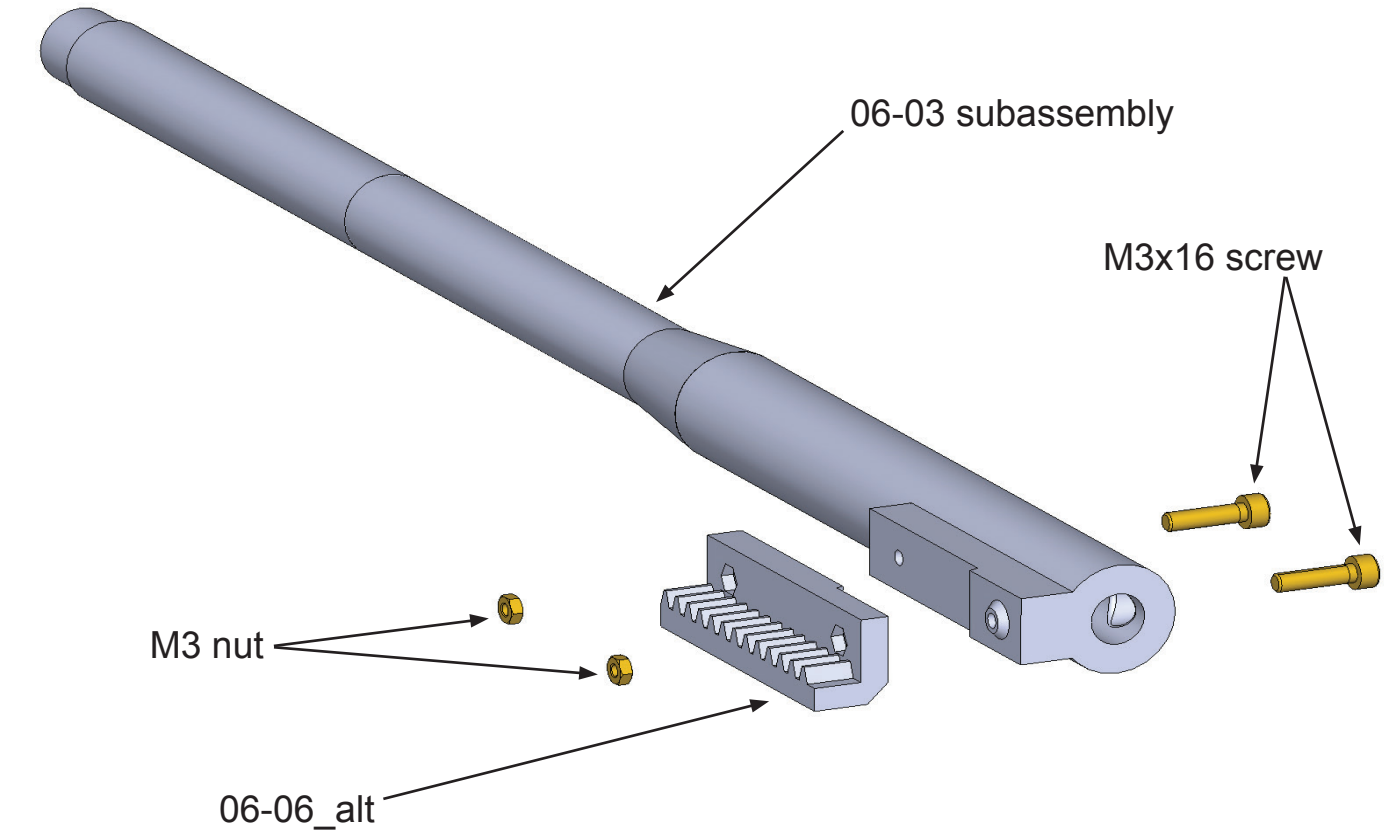

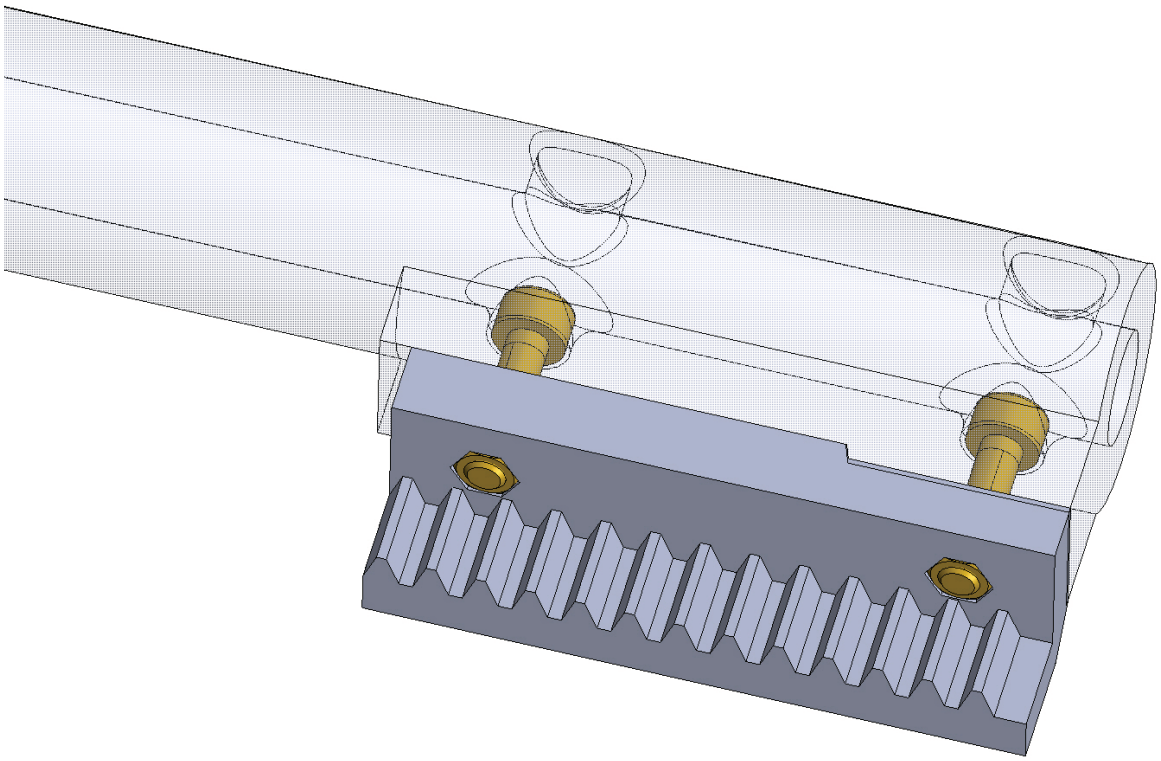

Attach part 06-06_alt into the part 06-03. Use two M3x16 screws and M3 nuts.

Assembly 06 - Cannon B - Version with gears

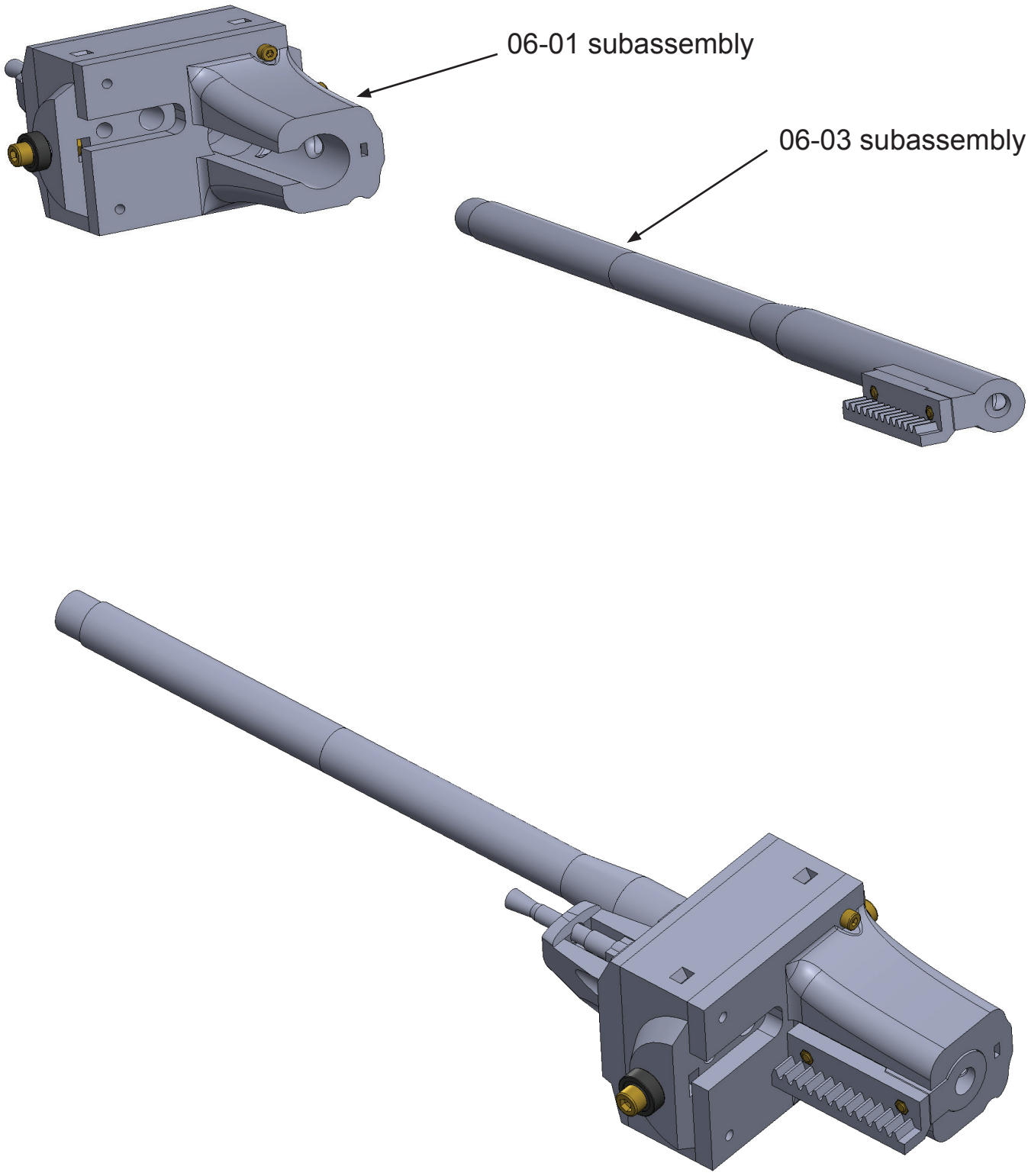

Insert subassembly 06-03. Do not glue the parts together.

Assembly 06 - Cannon B - Version with gears

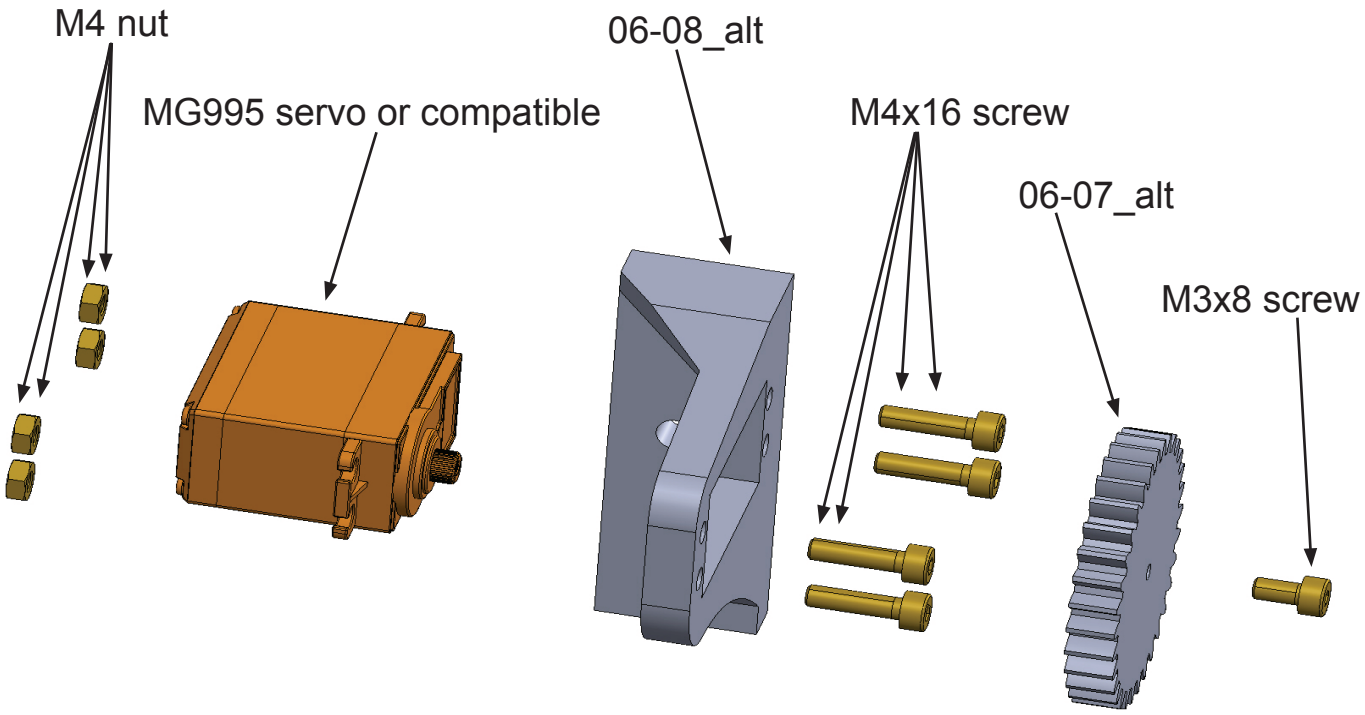

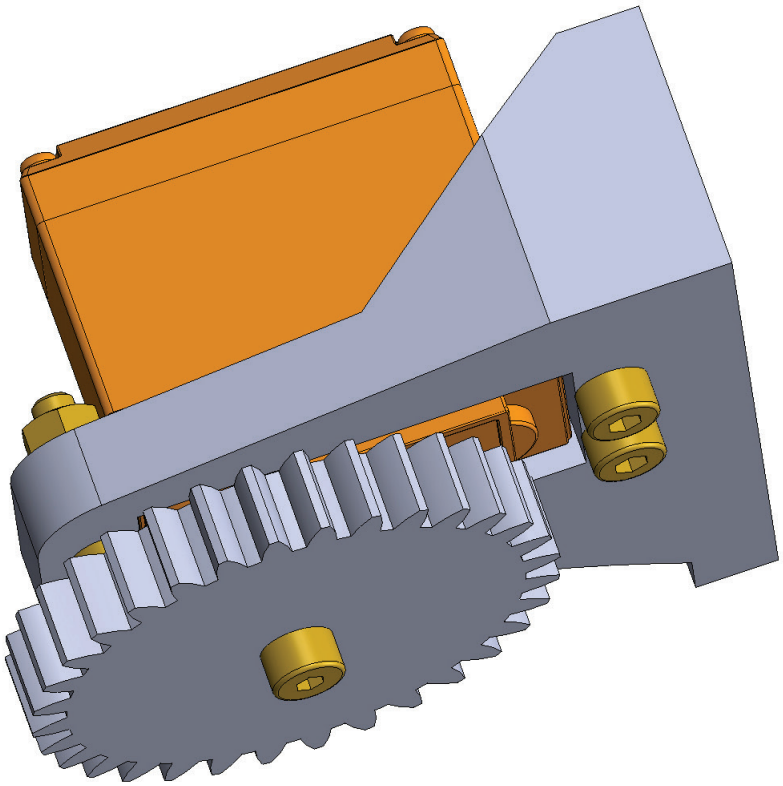

Attach a MG995 or other compatible servo to part 06-08_alt.
Use 4 M4x16 screws and M4 nuts.
Attach part 06-07_alt to the servo using a M3x8 screw.

Assembly 06 - Cannon B - Version with gears

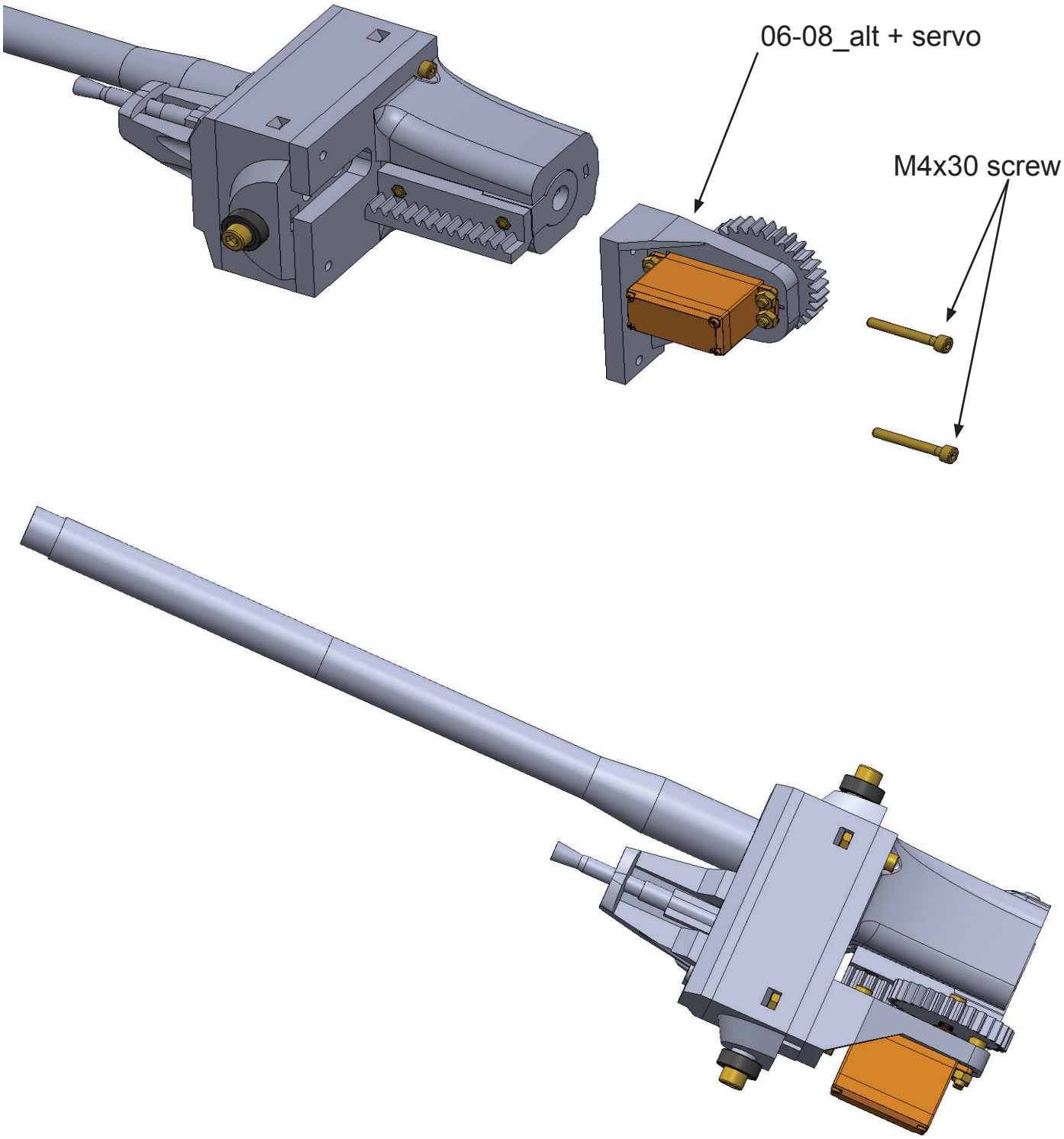

Fasten part 06-08_alt with two M4x30 screws.

Assembly 06 - Cannon B - Version with gears

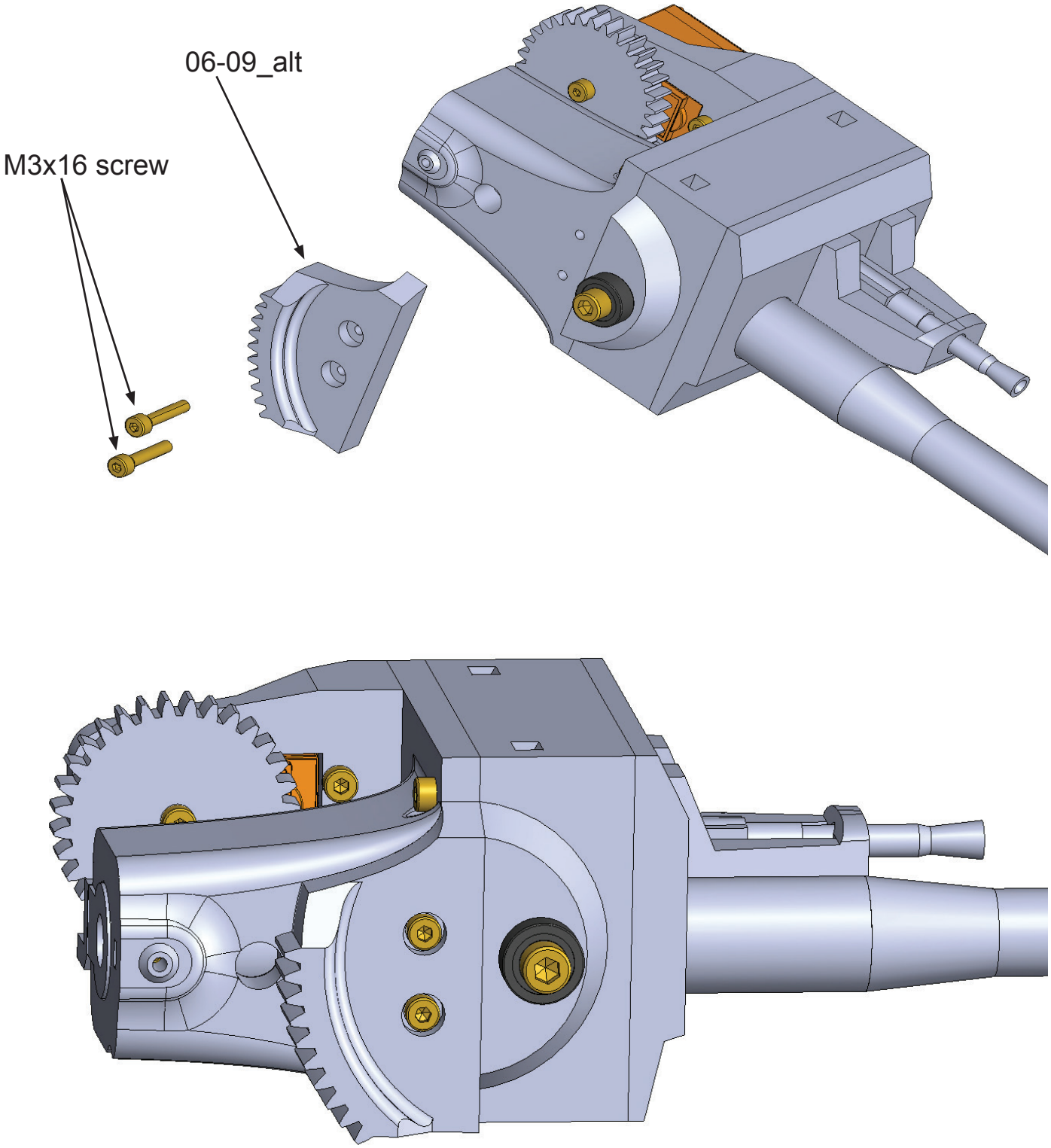

Attach part 06-09_alt to part 06-02.Secure with two M3x16 screws.

Assembly 06 - Cannon B - Version with gears

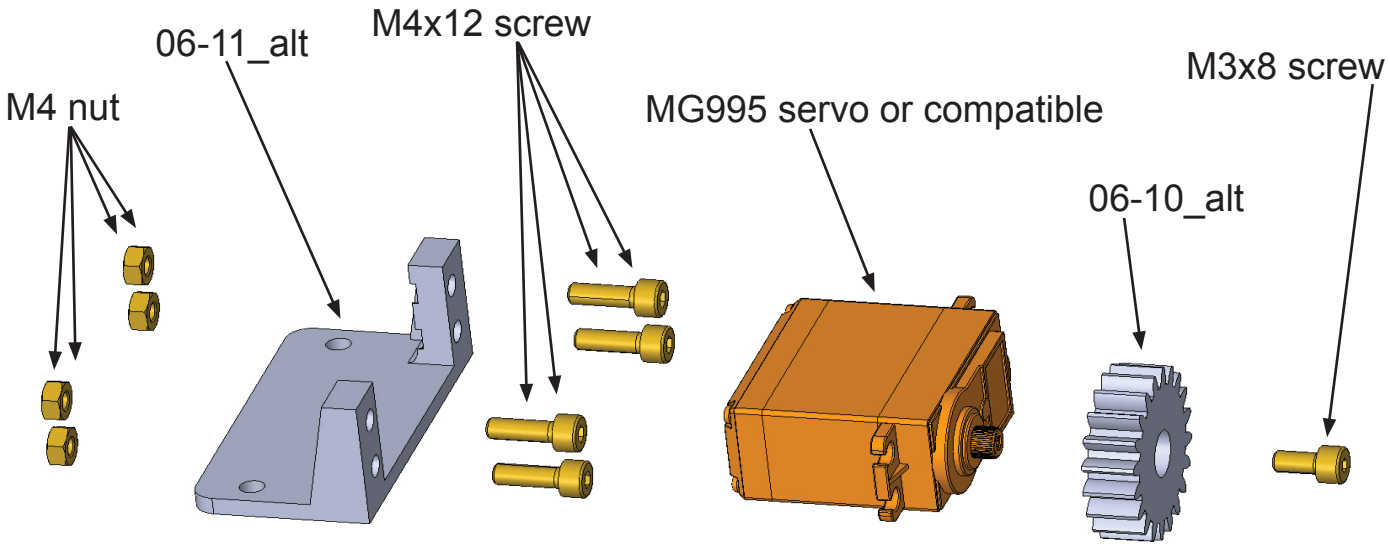

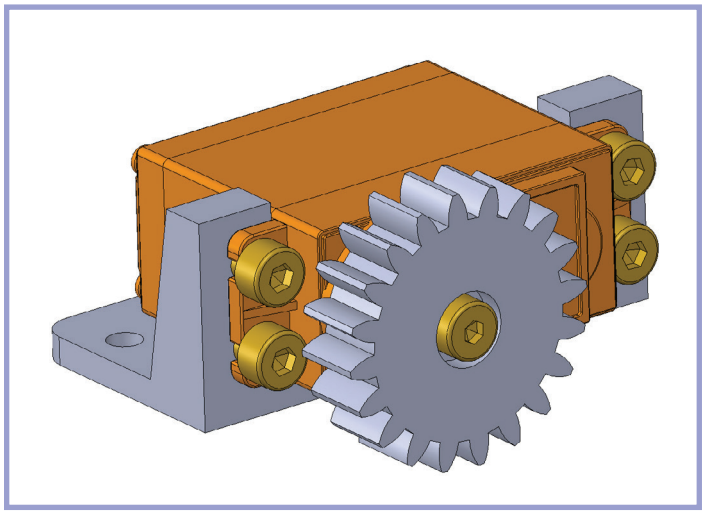

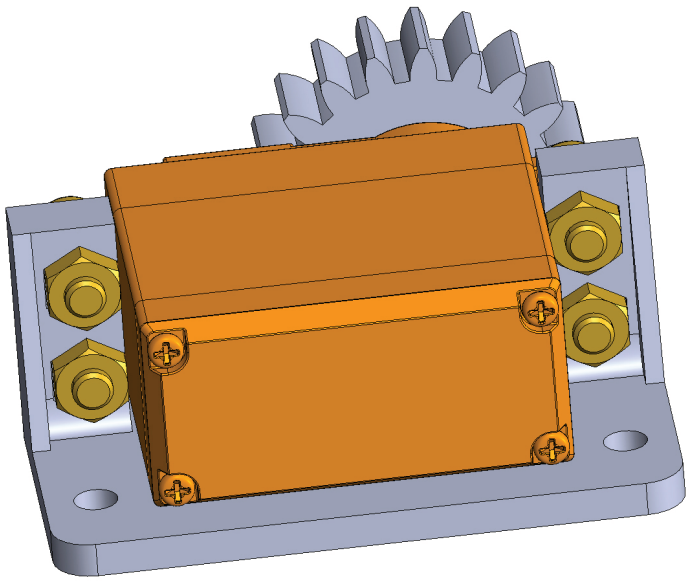

Attach a MG995 or other compatible servo to part 06-11_alt.
Use 4 M4x16 screws and M4 nuts.
Attach part 06-10_alt to the servo using a M3x8 screw.

Assembly 06 - Cannon B - Version with gears

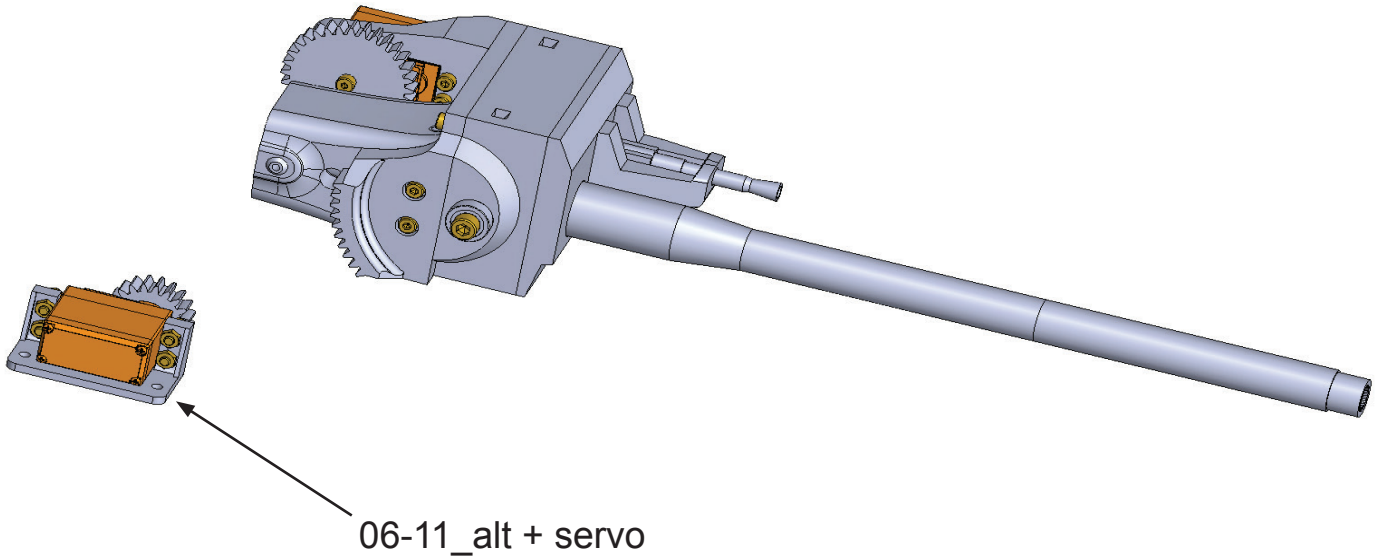

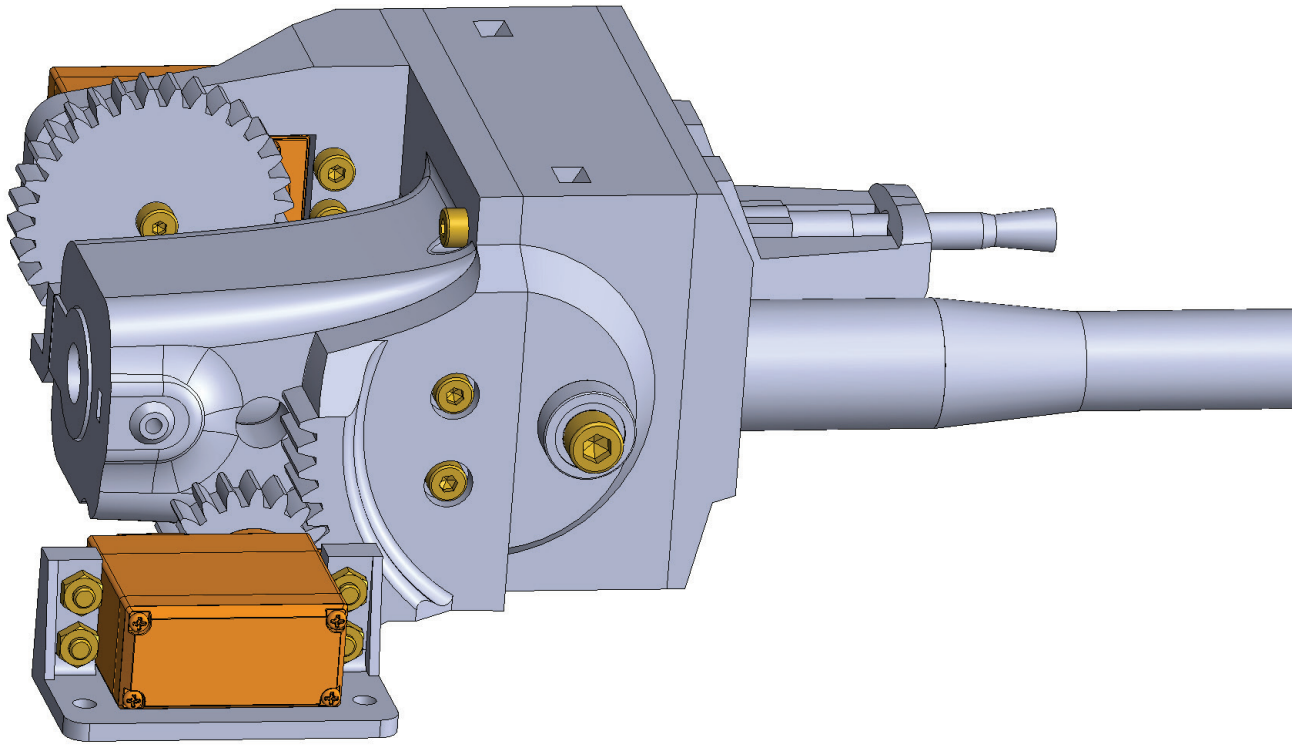

Prepare part 06-11_alt together with the servo.
In the picture you can see the position in which the part will be attached to the turret.

Assembly 06 - Cannon B - Version with gears

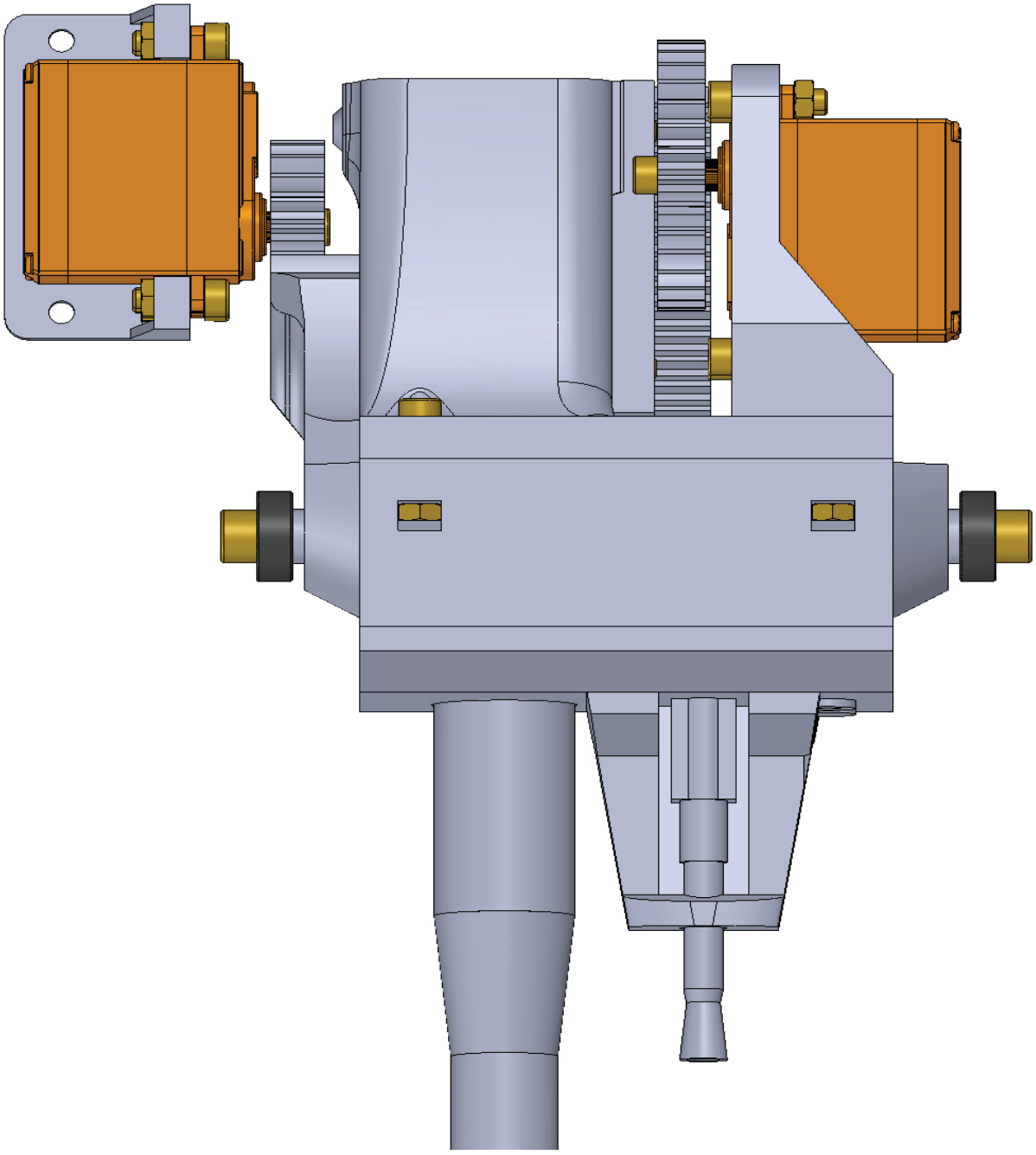

Correct position of the servo and arm in the zero/default position.
Part 06-10 is perpendicular to the cannon.
The arm of the servo is parallel to the cannon.

Assembly 06 - Cannon B - Version with gears

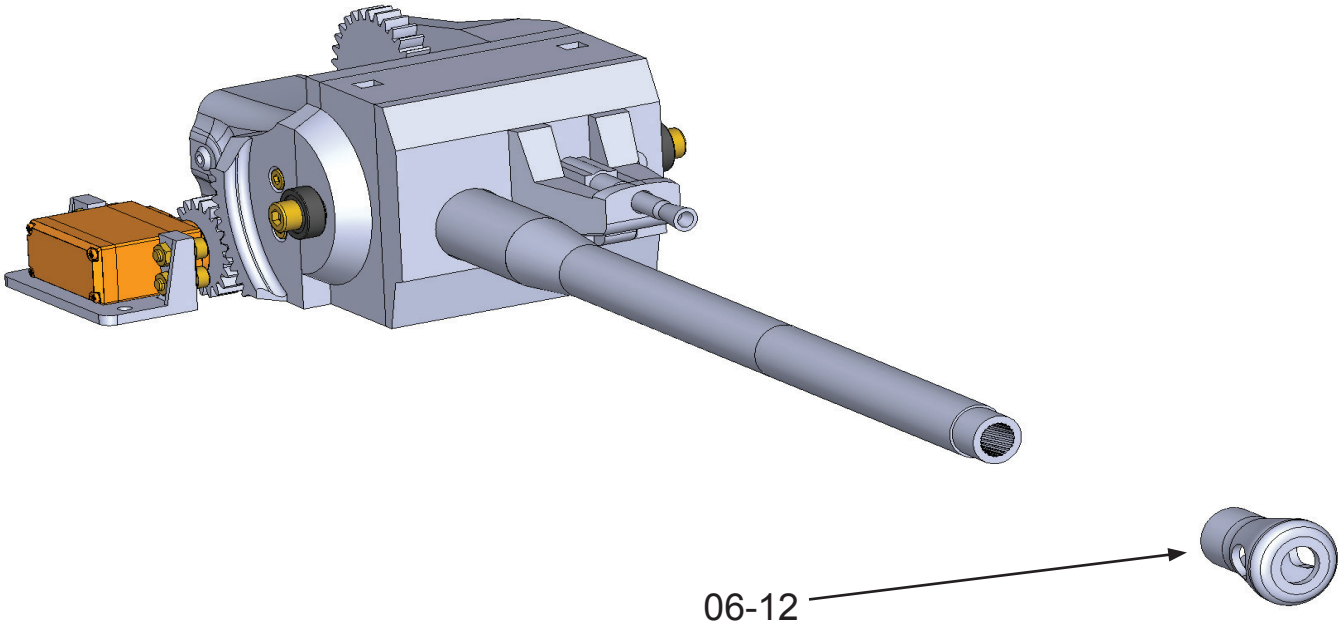

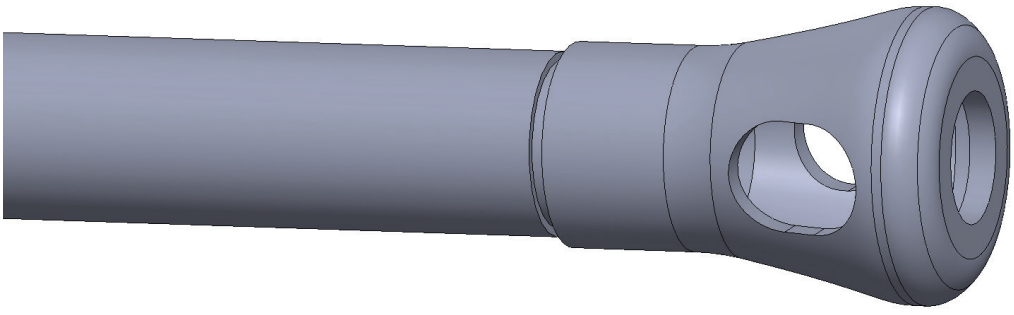

Complete the cannon by adding part 06-12.
Attach the part so that it can be detached in the future.
In case of service, the part will have to be detached.

Assembly 06 - Cannon B - Version with gears

Final Assembly

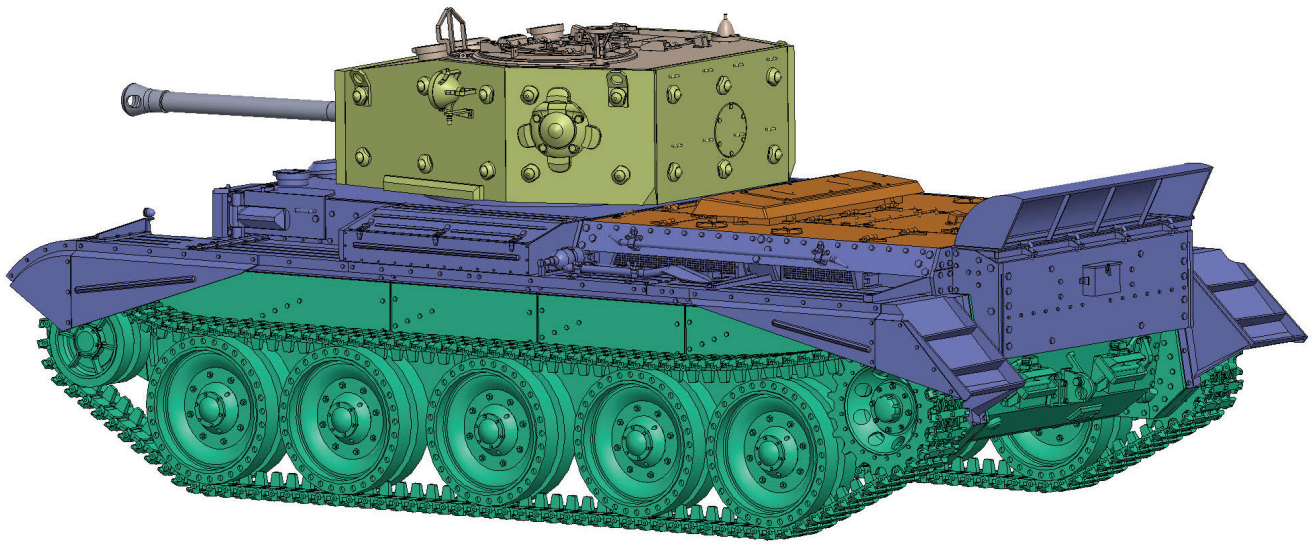

3D PRINTED PARTS:	Assembly 01, Assembly 02, Assembly 03, Assembly 04, Assembly 05, Assembly 06.
OPTIONAL 3D PRINTED PARTS:	
NON-PRINTED PARTS:	M4 nut (4x), M4x50mm screw (4x), M4x30mm screw (4x), M4x12mm screw (2x).

Final Assembly

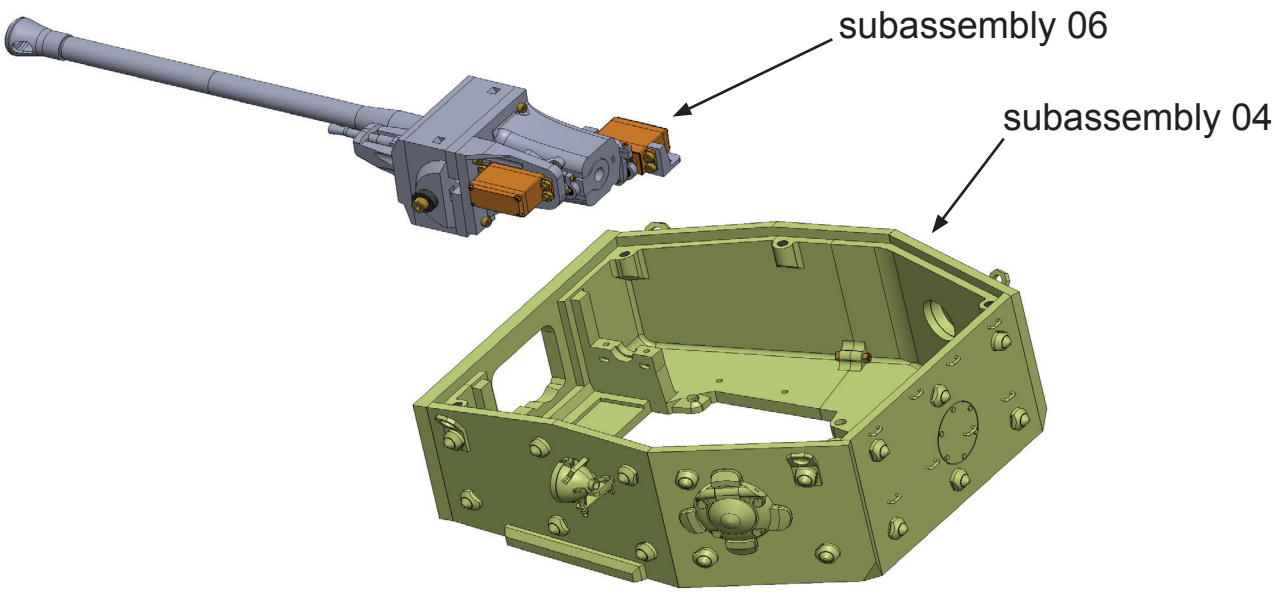

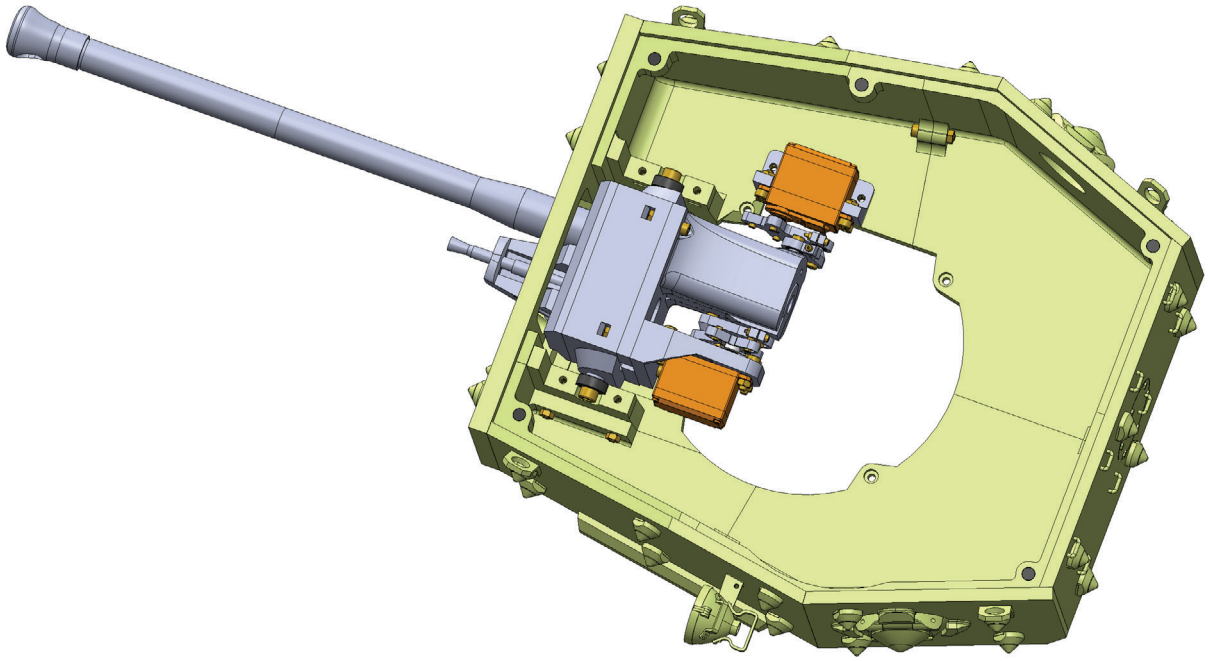

Insert the cannon into the turret.
In this guide we will use the Type A cannon,
but the procedure and parts are the same for the Type B cannon.
You can change the cannon type at any time by replacing the 6 printed parts (and the necessary hardware).

Final Assembly

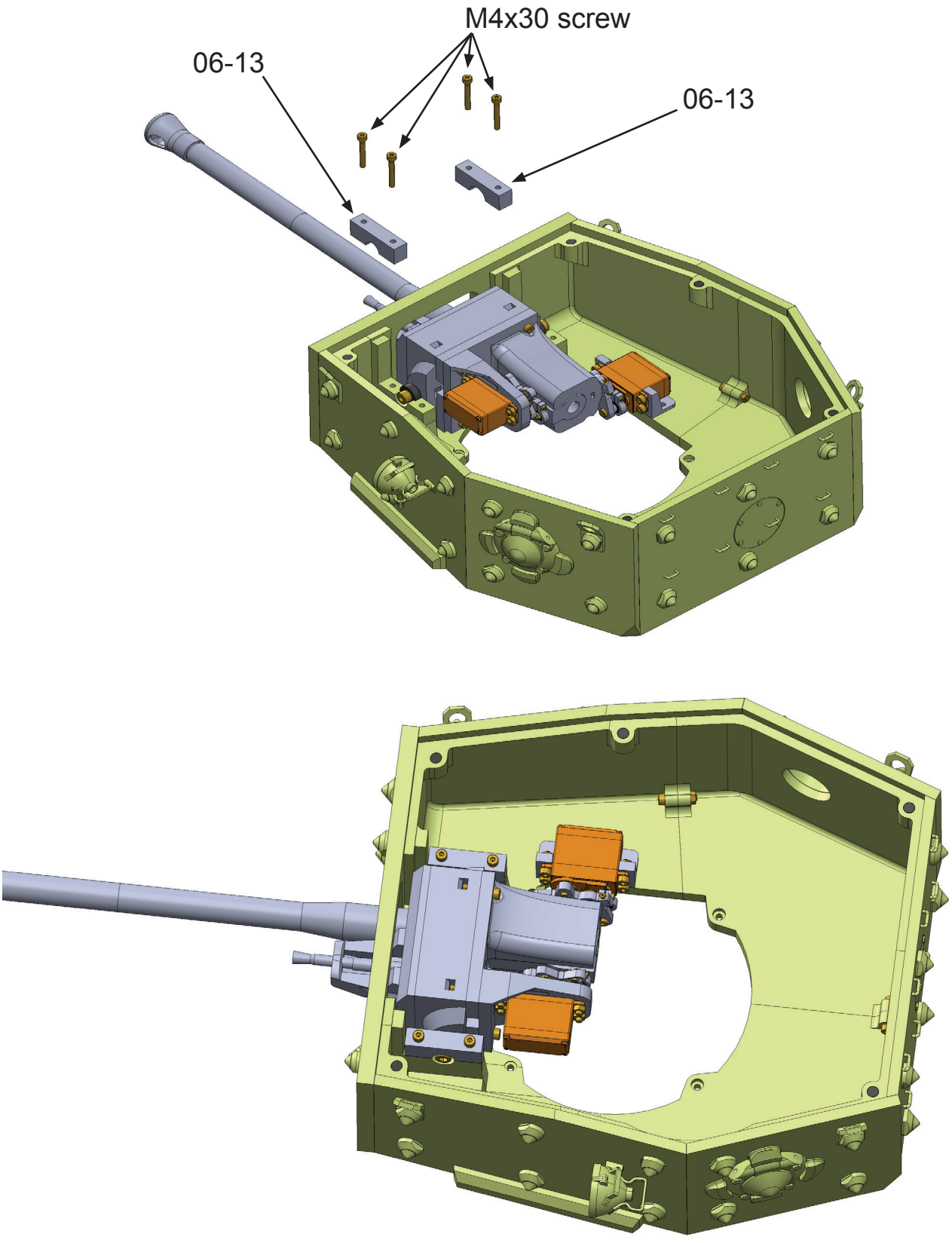

Fix the cannon with a pair of parts 06-13. Use 4 M4x30 screws.

Final Assembly

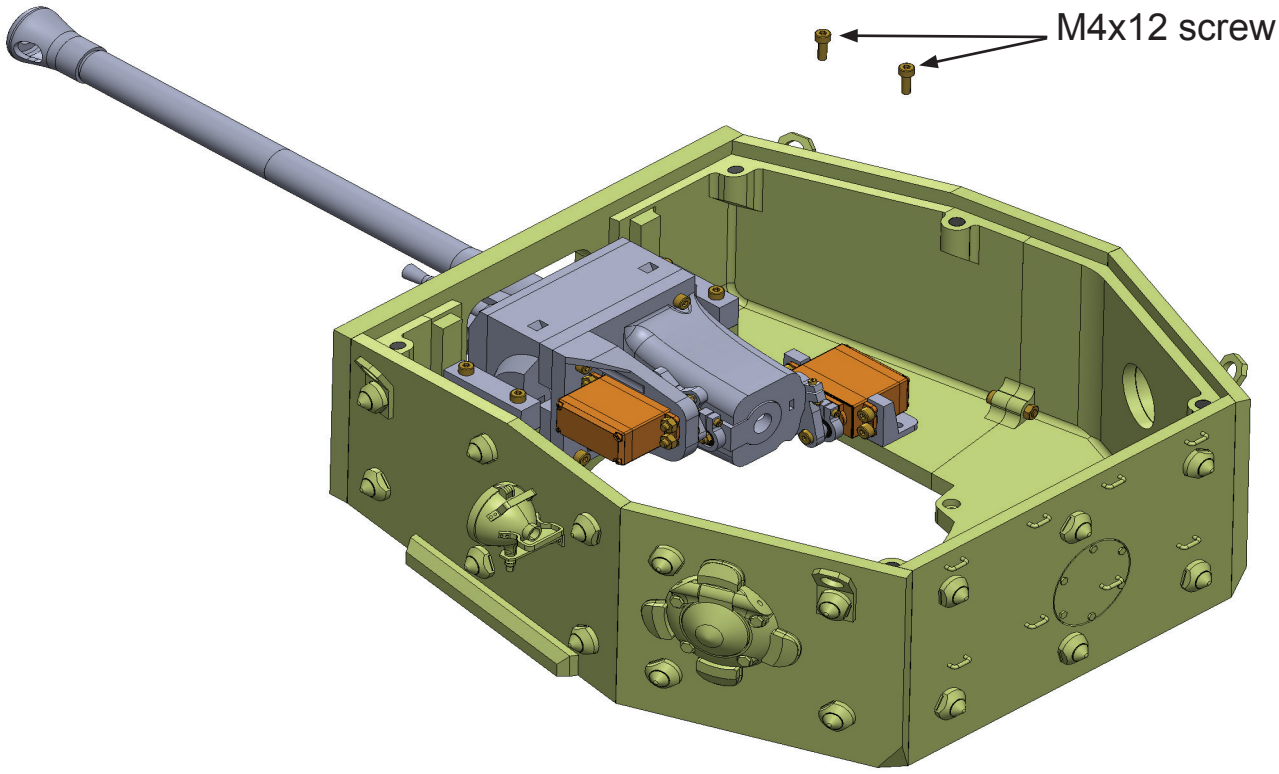

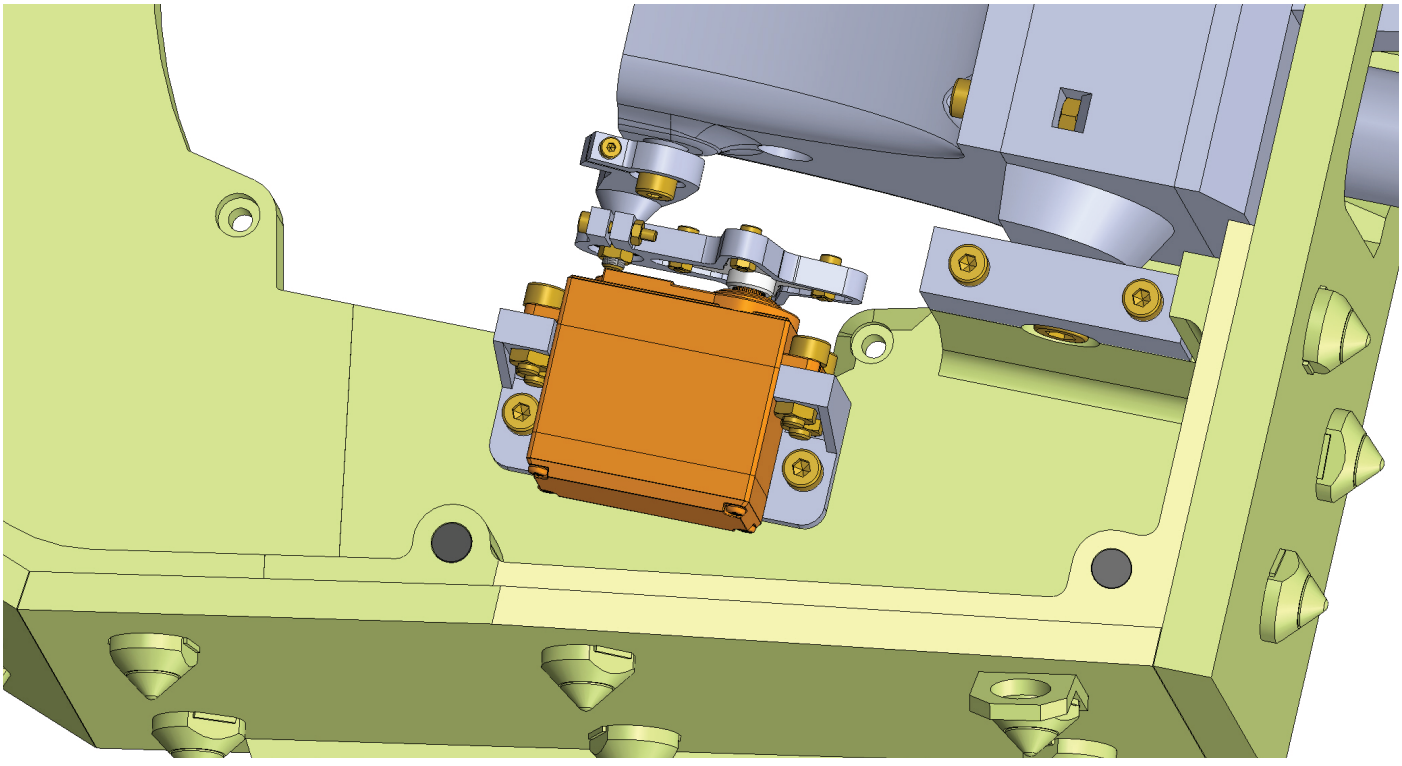

Secure the servo and part 06-11 with a pair of M4x12 screws.

Final Assembly

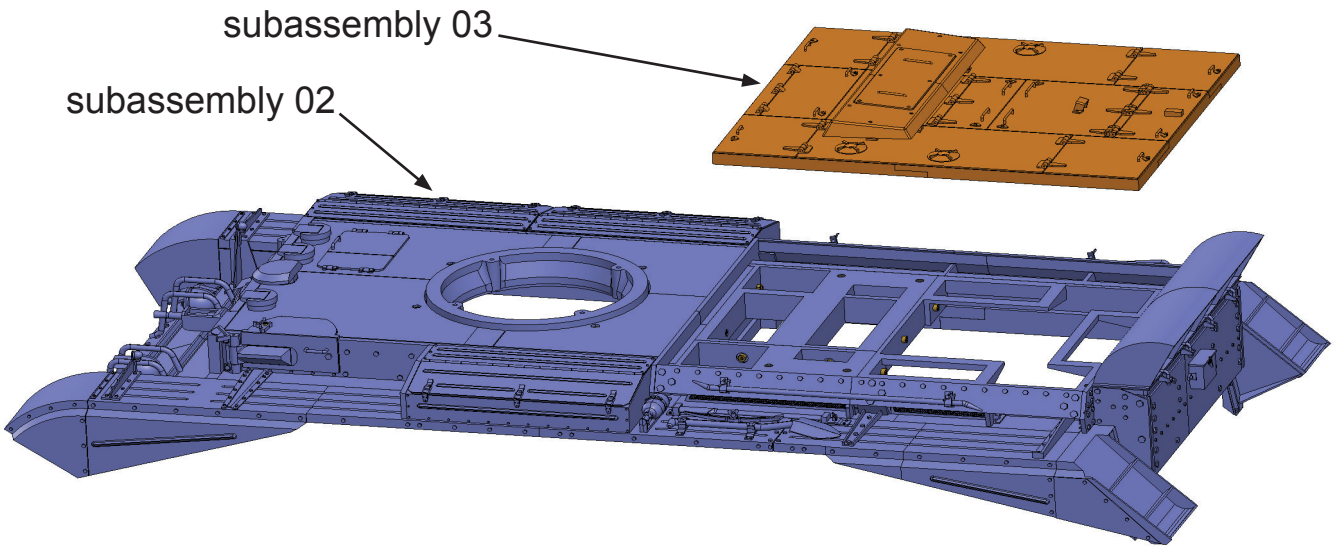

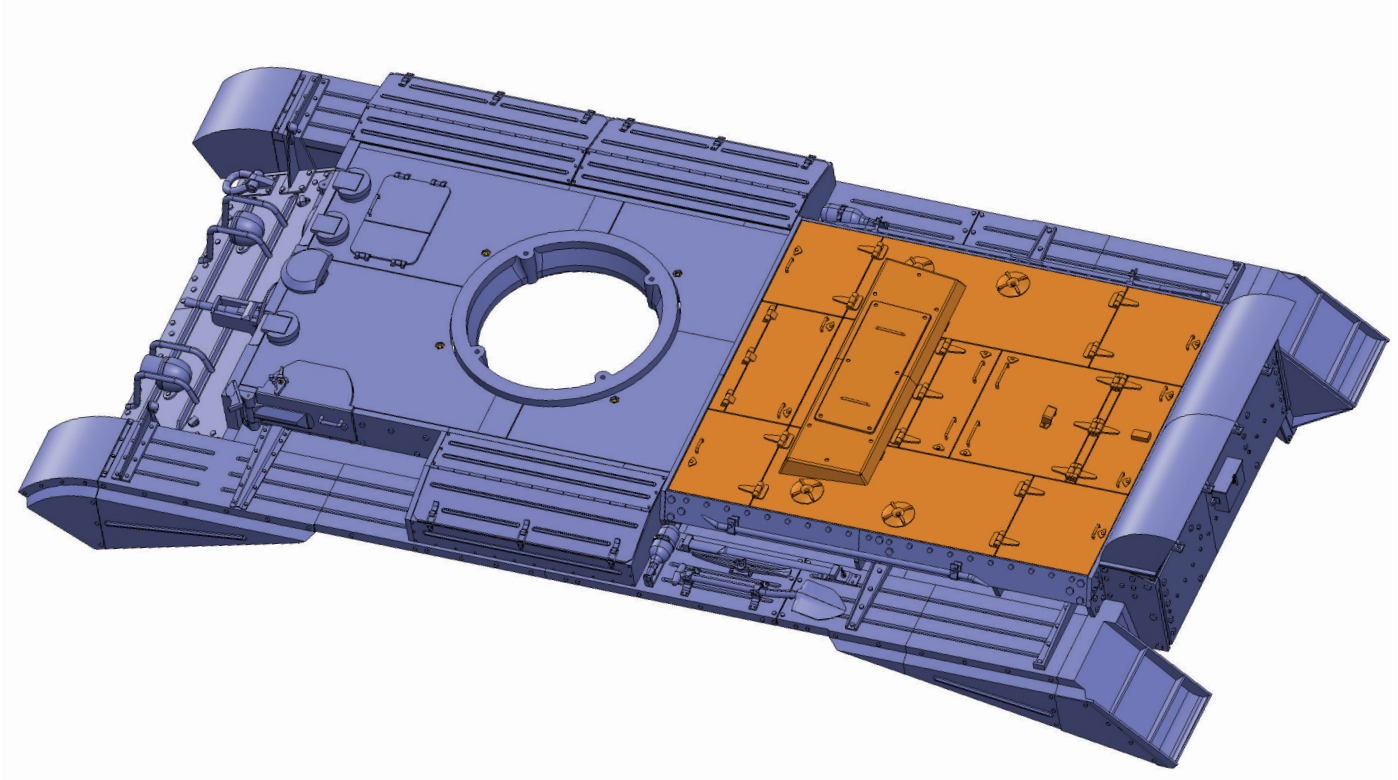

Insert assembly 03 into the upper part of the hull - into assembly 02.
Do not glue the parts together.
You will have quick and practical access to the inside of the tank.
The assembly 03 should slide into the hull and fit exactly into the hole.

Final Assembly

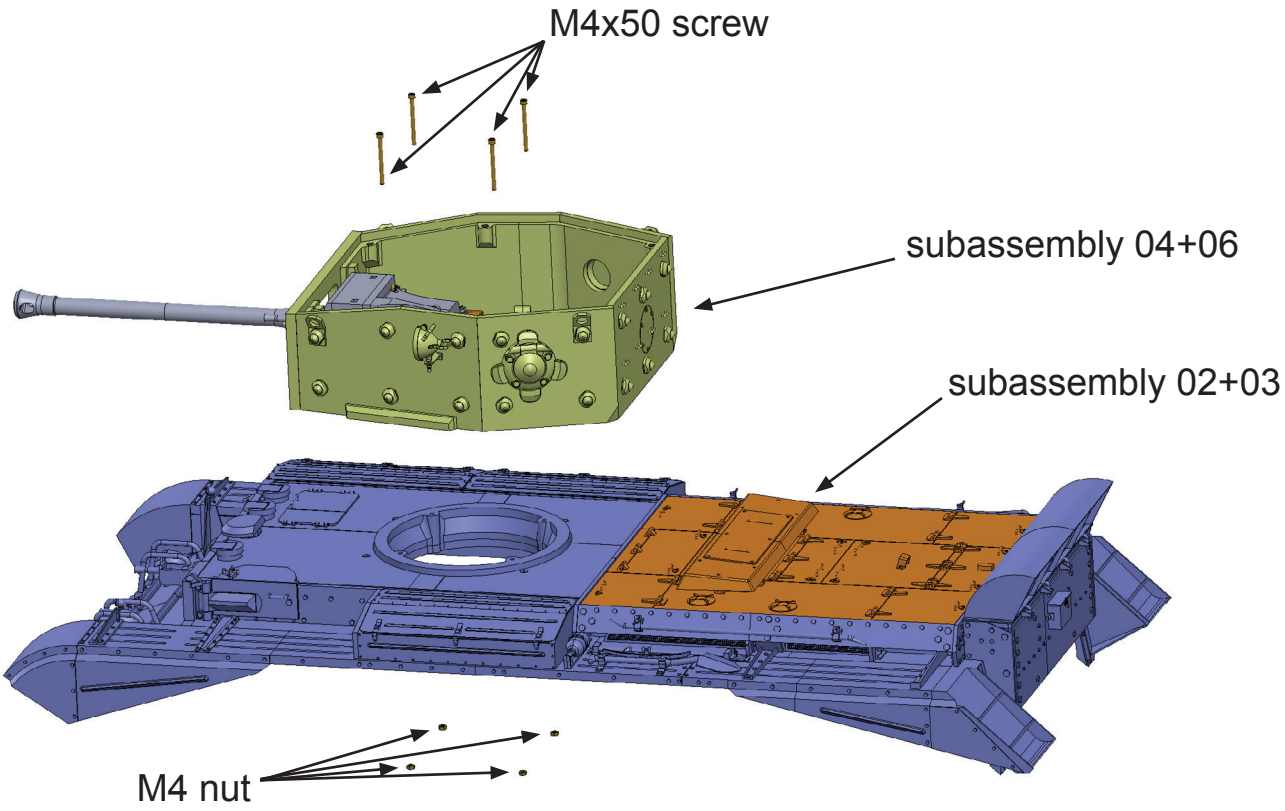

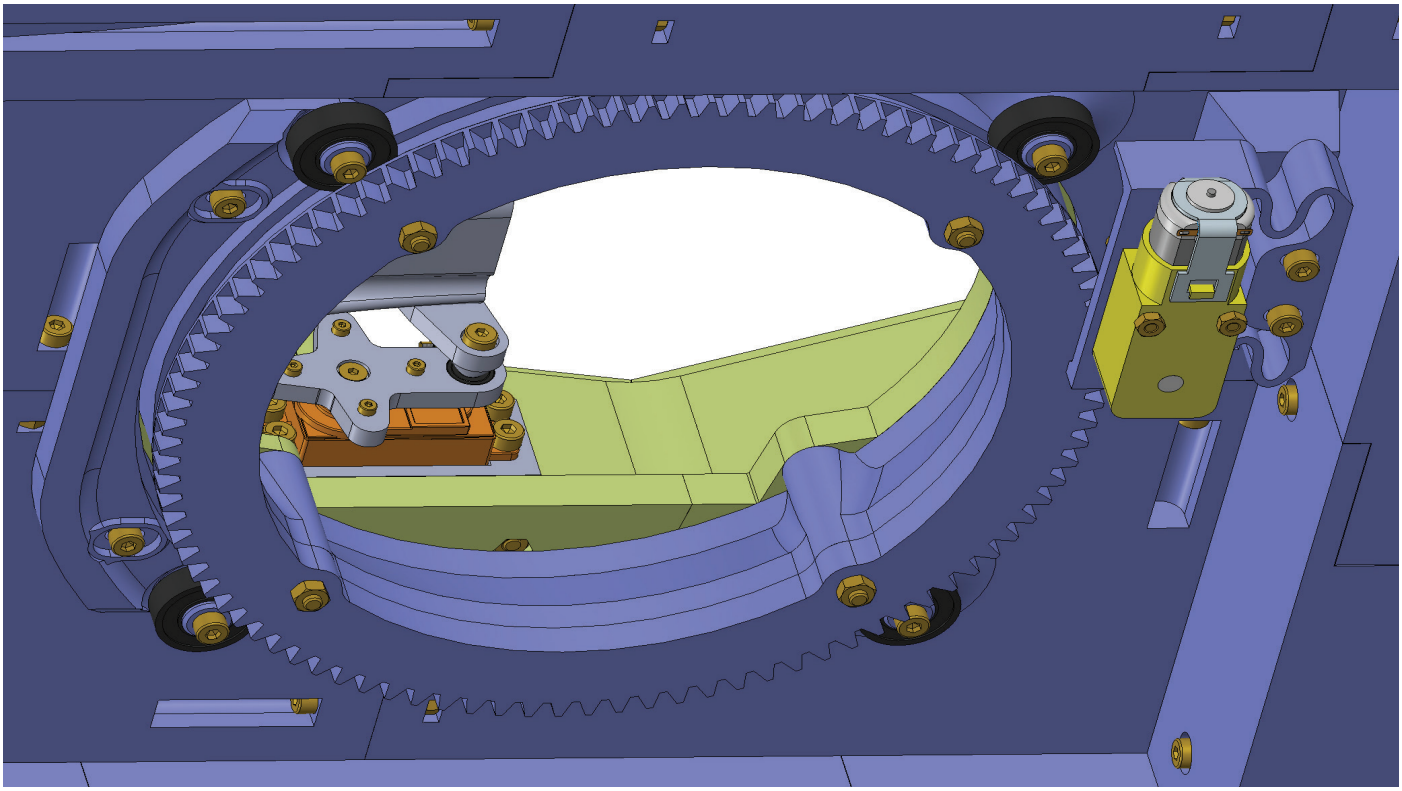

Connect the top of the hull and the turret with 4 M4x50mm screws and M4 nuts.

Final Assembly

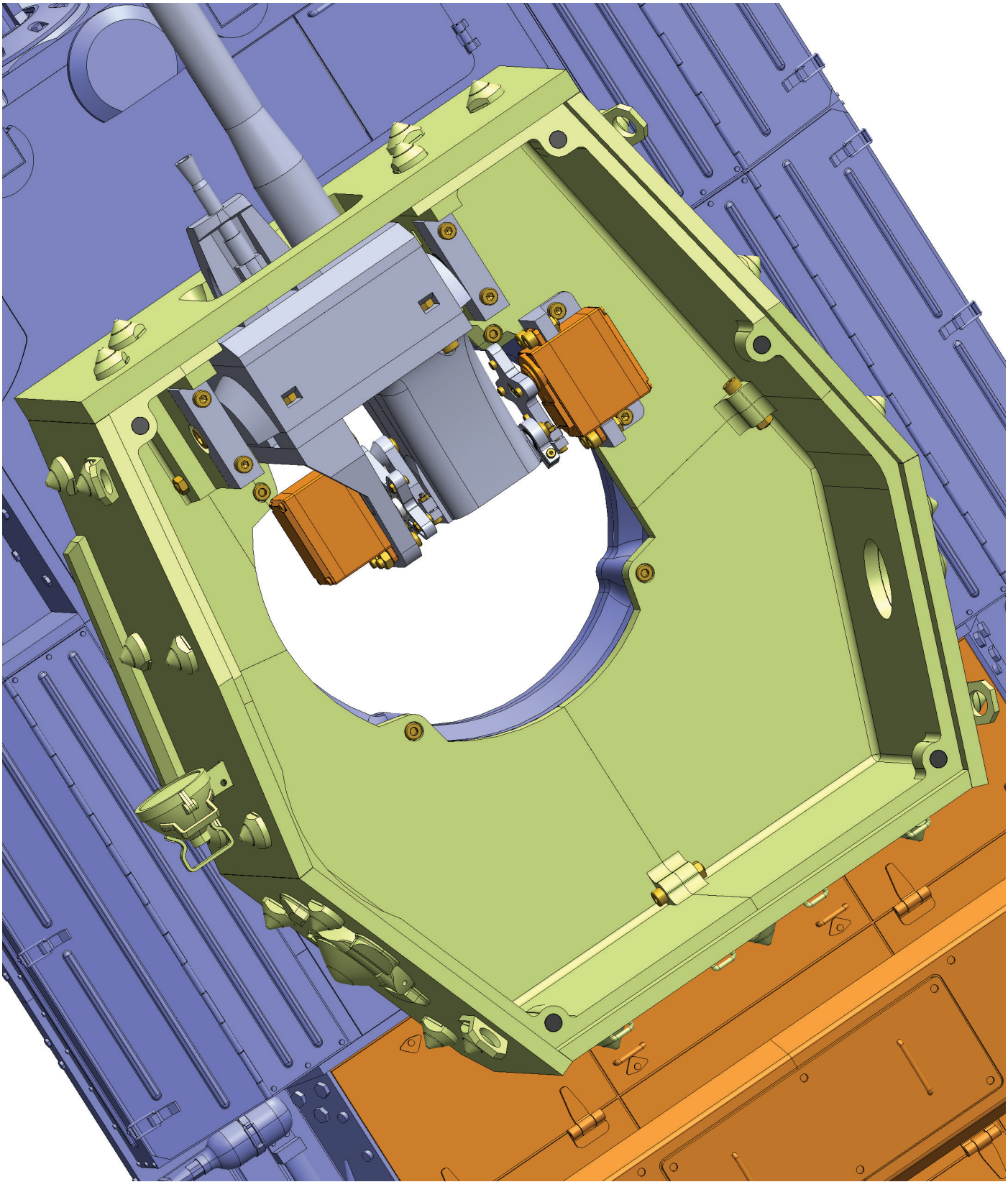

Auxiliary view - installed turret.

Final Assembly

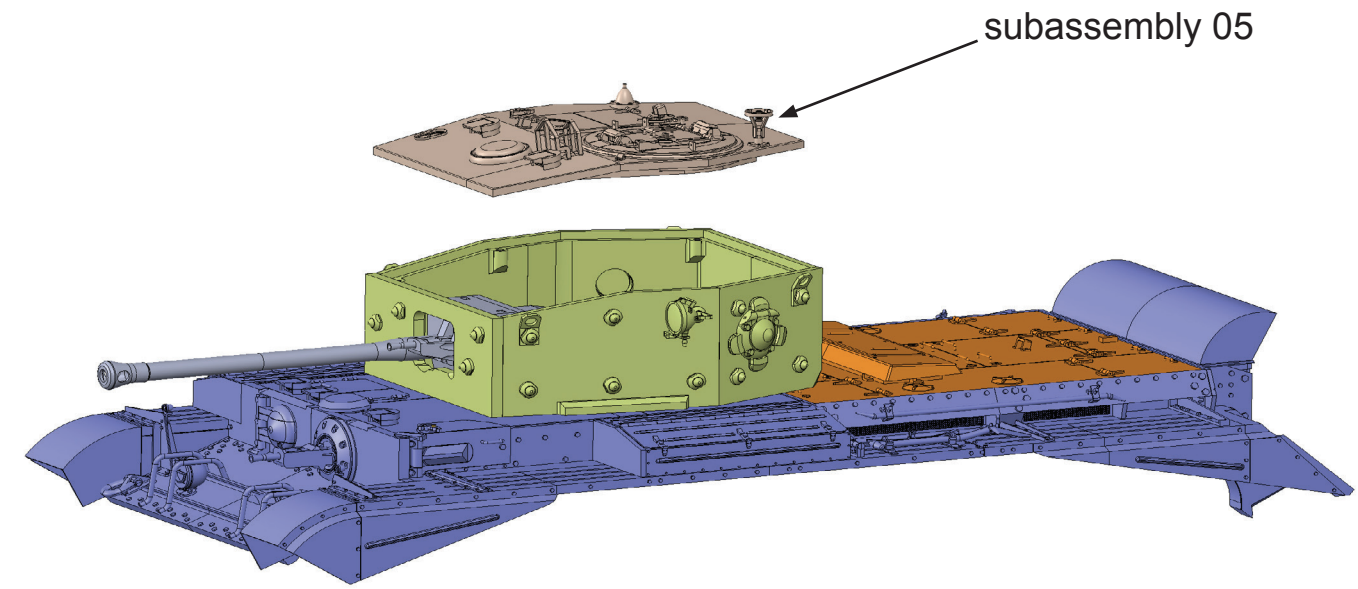

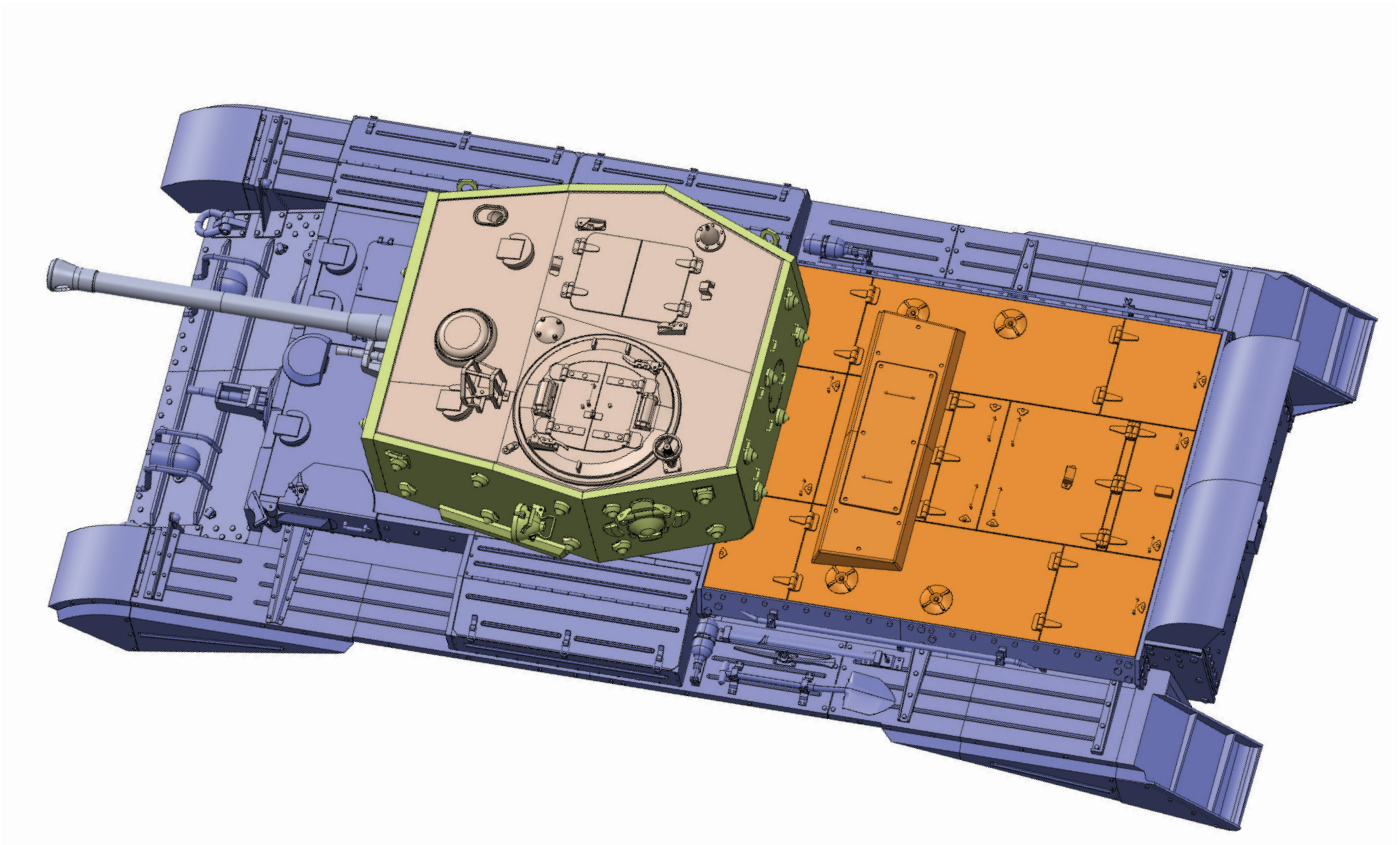

Attach the top of the turret - assembly 05.
The assembly is held in place by magnets.
Allows very practical access to the turret.

Final Assembly

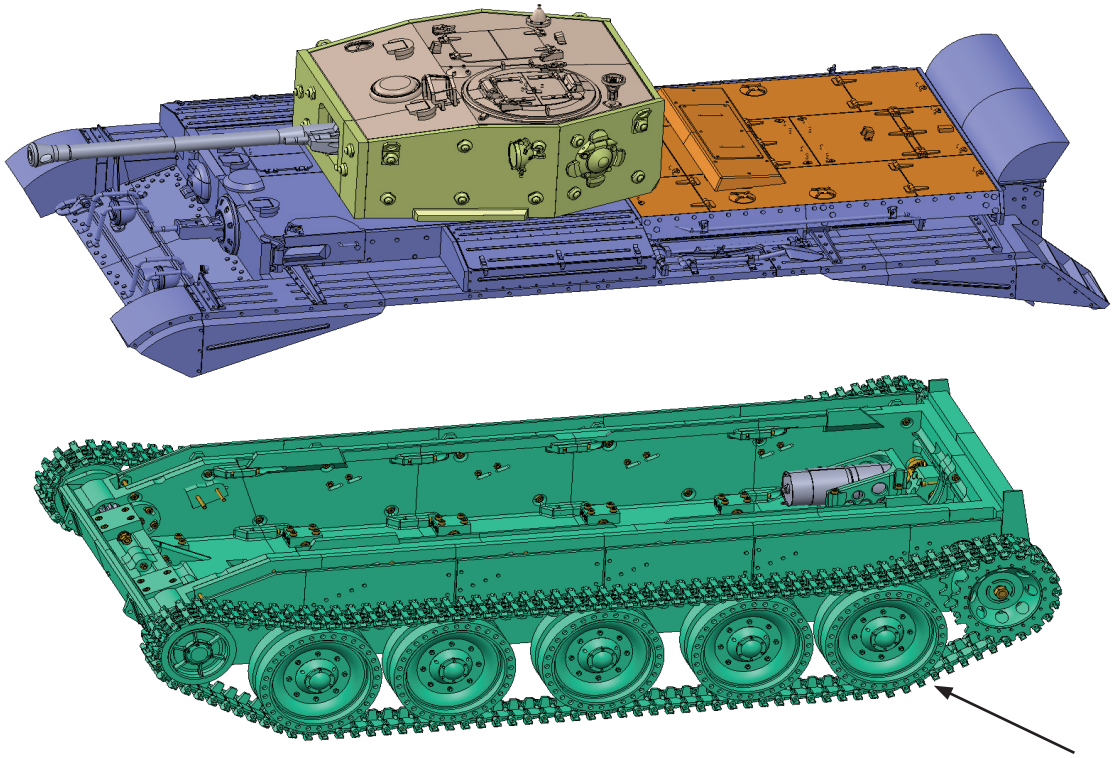

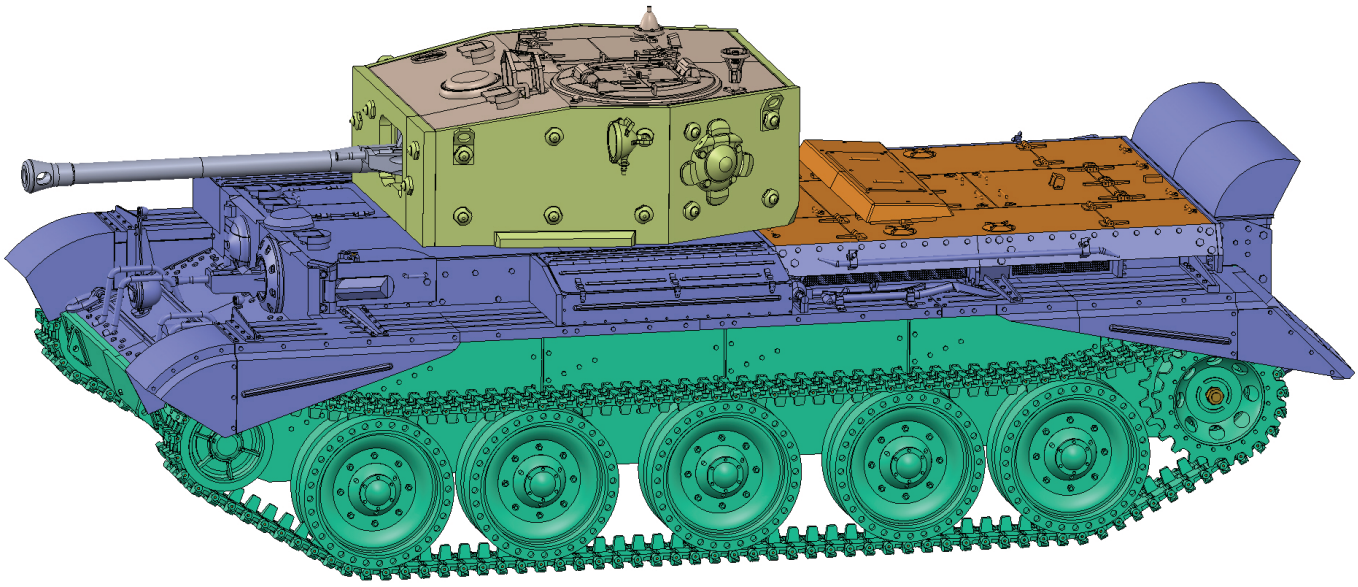

The last step - connect the bottom and top of the hull - assemblies 01 and 02.
Do not glue the assemblies together under any circumstances.

Final Assembly

Congratulations on completing the model.
We hope the construction was fun and hassle-free.

Tips for connecting electronics, more information and tips for printing, common tips for operation and many other tools can be found on our forum:

https://www.warprints.xyz/forum

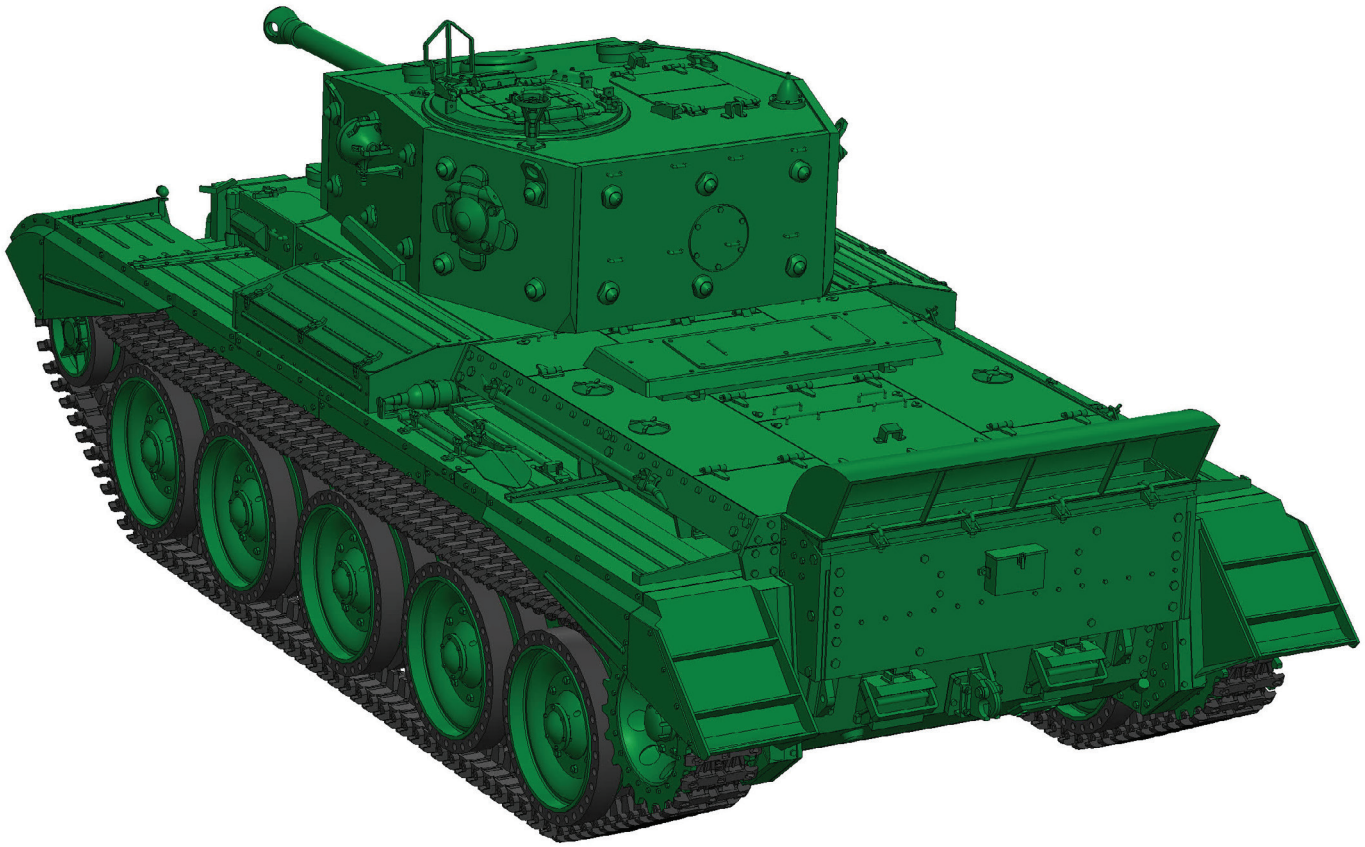

Cromwell Mk.IV - scale 1/6
Assembly guide, version 1.3.4_EN
© warprints s.r.o. 2023