Jagdpanzer 38 (t)
Hetzer

Assembly Guide

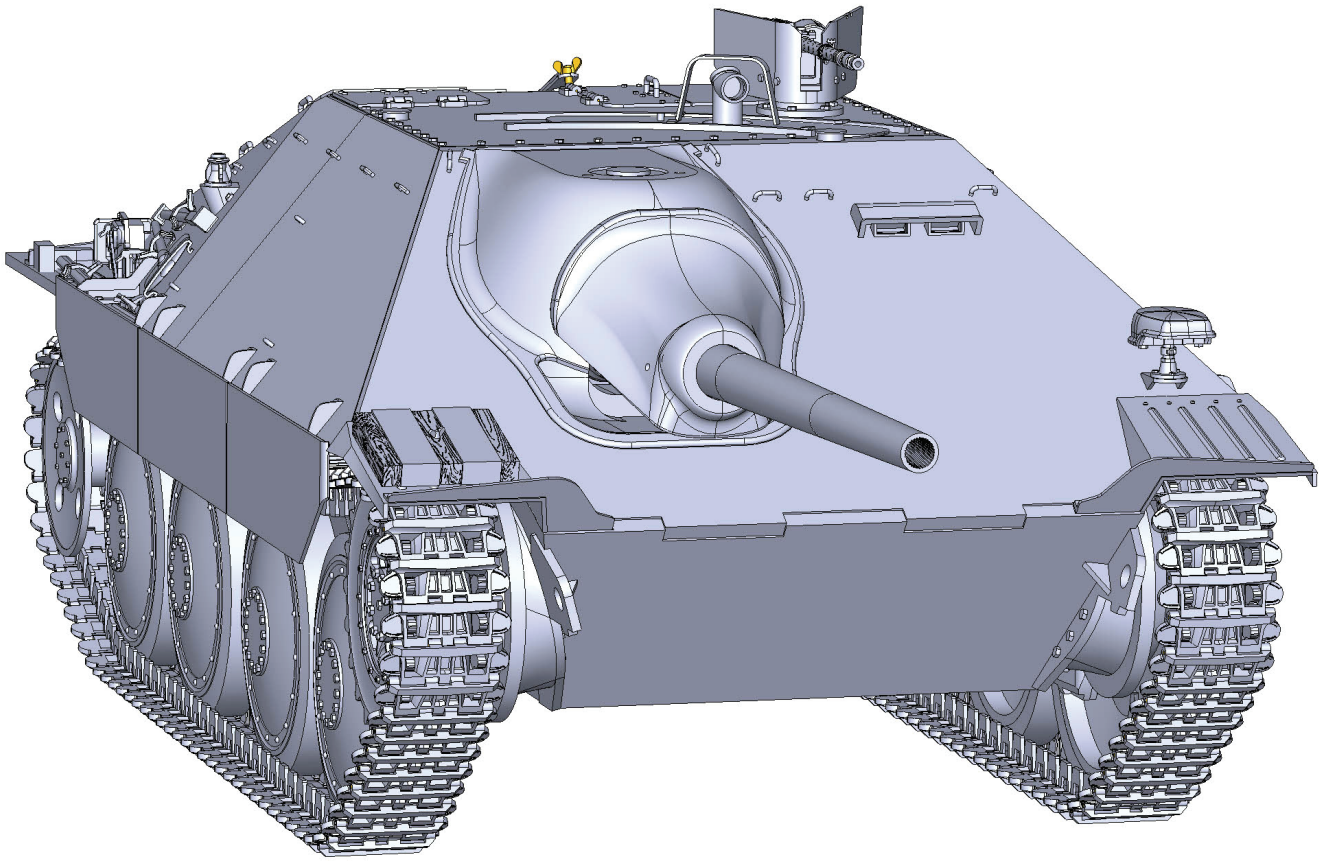

1/6 scale RC model by WARPRINTS

Jagdpanzer 38(t)
Assembly guide

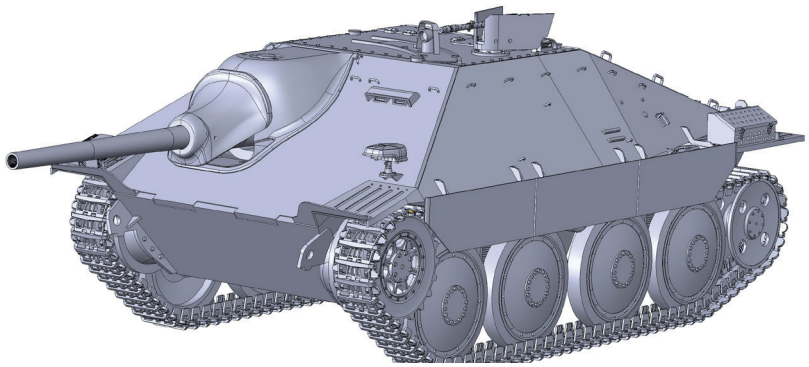

Thank you for choosing our model.

We hope that the construction will be smooth and you will enjoy the model.
The model is designed to be easy to maintain and modify.
At the same time, we tried to offer wide possibilities and compatibility
during construction.
This section of the manual will guide you through the construction of the model.
It also includes a list of materials needed for the construction.
For a list of all printed parts, see the second part of the manual titled
Jagdpanzer-38 (t) HETZER PRINTING GUIDE.

DON'T worry about the large number of pages in this manual.
IT IS FULL OF LARGE PICTURES WHICH TAKE A LOT OF SPACE.

It is prepared so that the position of all parts is clearly visible and each procedure is sufficiently described.
If you encounter problems or uncertainties during construction, please contact us at https://www.warprints.xyz/forum

In this manual you will find everything you need to build the model, including the location of mechanical parts such as servomotors, screws or various bearings.
The manual is divided into four larger chapters.
All printed parts are numbered according to the order in which they are installed on the model.
Some printed parts are identical or mirrored, but have different numbering to keep the construction clear.
Follow the construction procedure according to the instructions,
do not skip or neglect any construction steps.

Failure to follow the procedure may result in further disabling construction or eventually to damage the model in operation !!!

The manuals include all alternative parts and procedures and in the future there may be other alternative parts and features available.

- possibility to install 360 ° servo for machine gun on the roof.
- possibility to connect the smoke generator to the exhaust.
- a functional lights.

- All hatches are openable. Installation of the hatch covers is essential for the use of the infrared receiver and the smoke generator.

- replacement tracks are actually usable and their holders are functional
- the rims of the wheels can be printed from a flexible material.
  At the same time, you have a single wheel in one piece at your disposal if you don’t want to or can’t print from flexible materials.

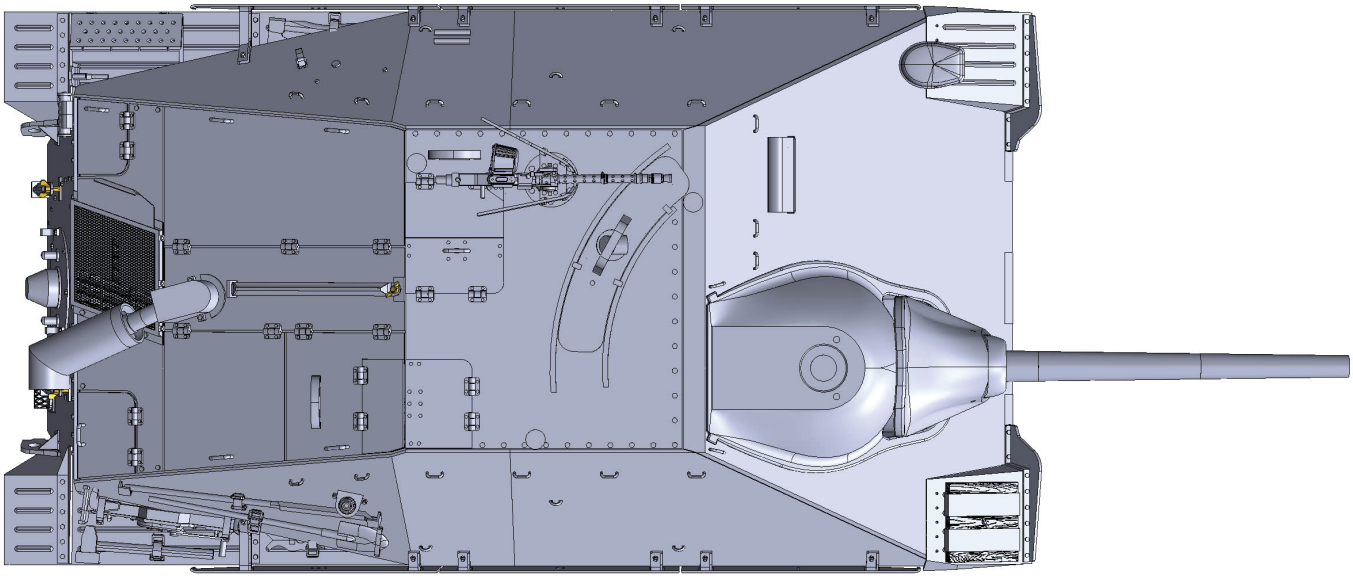

The manual contains the whole model except installation of the control unit, transmitter, battery and the final connection of electronics.
The connection of the electronics and especially the control unit depends on the choice of model and part configurations.
The choice of control unit is up to you, it will greatly affect the final price of the model but also its functions.
The model in full configuration requires a sophisticated control unit. We recommend Clark TK40 due to its compact size and great manufacturers support.
http://clark-model.com/eng/prod_rx40/index.html
Specify soundpack when ordering, TK40S-Hetzer, or TK40-Hetzer is a full part number.

This also applies to the other advanced options such as 360 ° servo.
Due to complexity of the topic of wiring electronics, all schemes and procedures of wiring various variations of electronics will be summarized in our forum.
In our forum we can actively help you not only with the involvement of electronics, but with the whole construction.
At the same time, your questions and answers will help many other modelers who are looking for help.
Therefore, please ask your questions about the construction and use of the model on our forum. Thank you.

The model is designed for advanced modelers. Check moving parts regularly.
The bolts on all wheels and arms of the servomotors
must be secured against falling out.
Tension the tracks sufficiently using the tensioners on the rear wheels.
When using a moving sight, always be very careful when handling
the upper part of the hull (chapter 04).
In this case, the top of the hull can only be installed if the cannon
is in the full left position.

All necessary components except the control unit, battery, receiver and transmitter can be found in the following lists.

Bill of Materials (BOM) :

This list contains the material needed to build the model in full configuration, including both versions of the cannon.
If you decide not to use some of the model's features therefore not use some parts, you may not need some of the material.
In this case, check the lists of non-printed material listed at the beginning of each chapter in this manual to select only the material you need.

PART	AMMOUNT
M6 threaded rod - 175mm lenght	2x
M4x60 Screw	2x
M4x50 Screw	4x
M4x40 Screw	22x
M4x35 Screw	8x
M4x30 Screw	4x
M4x20 Screw	7x
M4x16 Screw	11x
M3x25 Screw	18x
M3x16 Screw	2x
M3x8 Screw	12x
M2x10 Screw	5x
M2x6 Screw	12x
M4x20 (25) DIN913 Screw (worm)	2x
M3x10 DIN913 Screw (worm)	2x
M6 Nut	12x
M4 Nut	69x
M4 Self-locking nut	10x
M3 Nut	27x
M3 DIN316 Nut	3x
M2 Nut	25x
M4 Washer	10x
M3 Washer	2x

PART	AMMOUNT
624zz bearing	24x
F624zz bearing	17x
696zz bearing	4x
623zz bearing	6x
Round magnets dia = 5mm - lenght = 7mm	8x
Round magnets dia = 3mm - lenght = 3mm	4x
3D printer extruder spring 22x9x7mm	2x
2x4mm diagonal mesh	1x
Wire - 1mm diameter and 13,5mm lenght	19x
Wire (pin) - 2mm diameter and 50mm lenght	200x
JGB37-550 260RPM Geared Motor	2x
TOWERPRO® MG955 Servo + arm + screw or compatible	3x
TOWERPRO® FR360 Servo or compatible	1x
3mm LED (1x red and 2x white)	3x
5mm LED (white)	2x

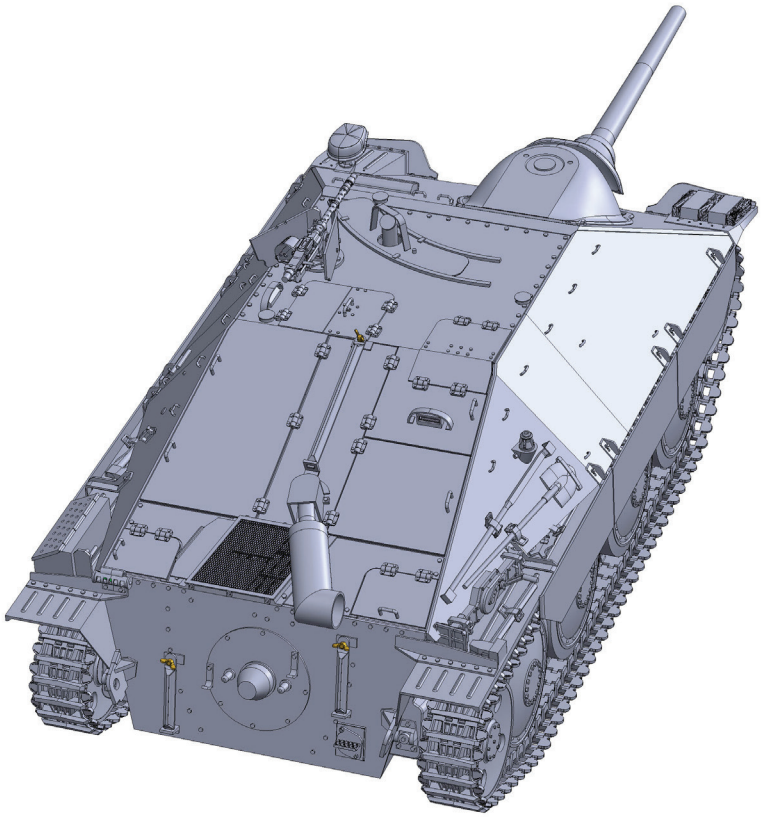

Jagdpanzer 38(t)
Assembly guide

Chapter 01 - Lower hull

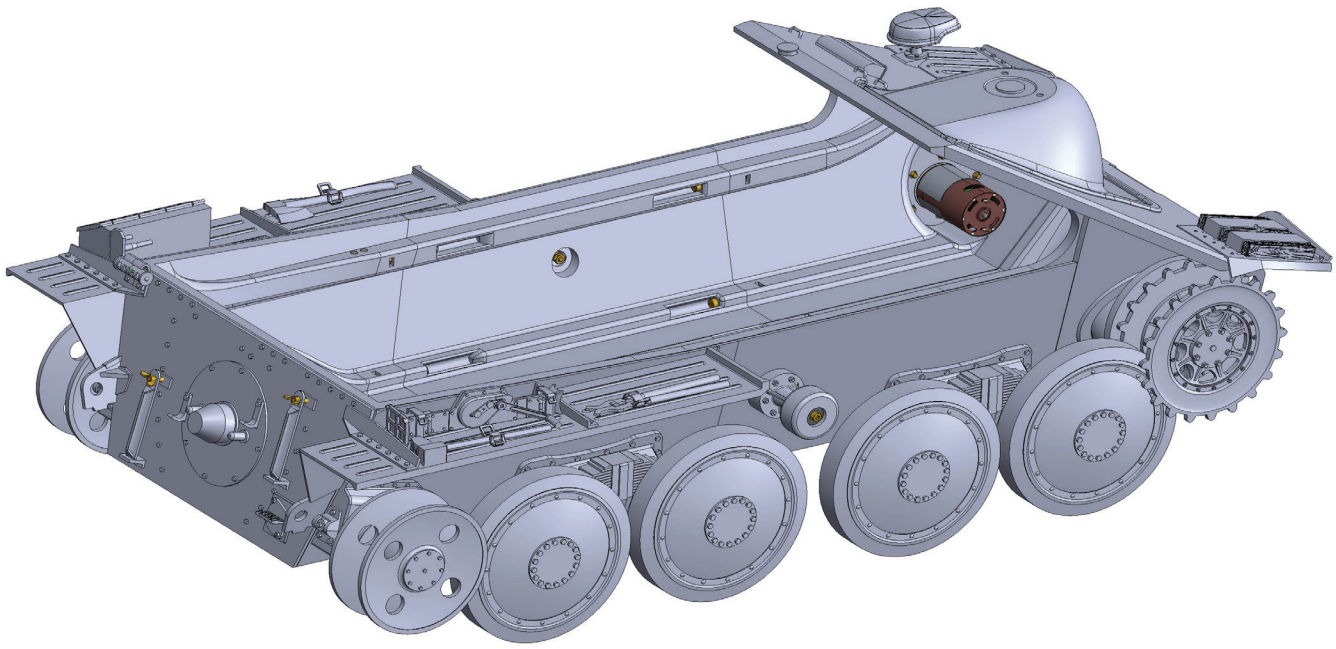

AMOUNT:	1
PRINTED PARTS:	01-01 (1x), 01-02 (1x), 01-03 (1x), 01-04A (1x), 01-04B (1x), 01-05A (1x), 01-05B (1x), 01-06 (1x), 01-07 (1x), 01-08 (1x), 01-09 (1x), 01-10 (1x), 01-11 (1x), 01-12 (1x), 01-13A (1x), 01-13B (1x), 01-13C (1x), 01-13D (1x), 01-13E (1x), 01-13F (1x), 01-14 (1x), 01-15 (1x), 01-16 (1x), 01-17 (1x), 01-18 (1x), 01-19 (1x), 01-20A (1x), 01-20B (1x), 01-20C (1x), 01-21 (1x), 01-22 (3x), 01-23 (1x), 01-24 (1x), 01-25 (1x), 01-26A (1x), 01-26B (1x), 01-26C (1x), 01-26D (2x), 01-27A (1x), 01-27B (1x), 01-28A (1x), 01-28B (1x), 01-28C (1x) ,01-29 (2x), 01-30 (1x), 01-31 (2x), 01-32 (2x), 01-33 (2x), 01-34 (2x), 01-35 (2x), 01-36 (2x), 01-37 (2x), 01-38A (1x), 01-38B (1x), 01-39 (8x), 01-40 (8x), 01-41A (8x), 01-41B (8x), 01-42A (8x), 01-42B (8x), 01-43A (4x), 01-43B (4x), 01-44 (8x), 01-45 (2x).
OPTIONAL PRINTED PARTS:	01-13_alt, 01-13A_alt, 01-13B_alt, 01-20_DLP, 01-21_alt, 01-24_DLP, 01-26_DLP, 01-42_alt.
NON-PRINTED PARTS:	M6 threaded rod - 175mm lenght (2x), M4x60 screw (2x) M4x40 screw (20x), M4x35 screw (8x), M4x30 screw (2x), M3x25 screw (14x), M3x8 screw (12x), M4x20 screw DIN913 (2x) M6 nut (12x), M4 self-locking nut (8x), M4 nut (42x), M3 nut DIN316 (2x), M3 nut (14x), M2 nut (8x), M4 washer (8x), 696zz bearing (4x), F624zz bearing (12x), 624zz bearing (24x), 3D printer extruder spring 22x9x7mm (2x), Round magnets dia = 5mm - lenght = 7mm (4x), 3mm LED (3x), 5mm LED (2x), JGB37-550 260RPM geared motor (2x).

Chapter 01 - Lower hull

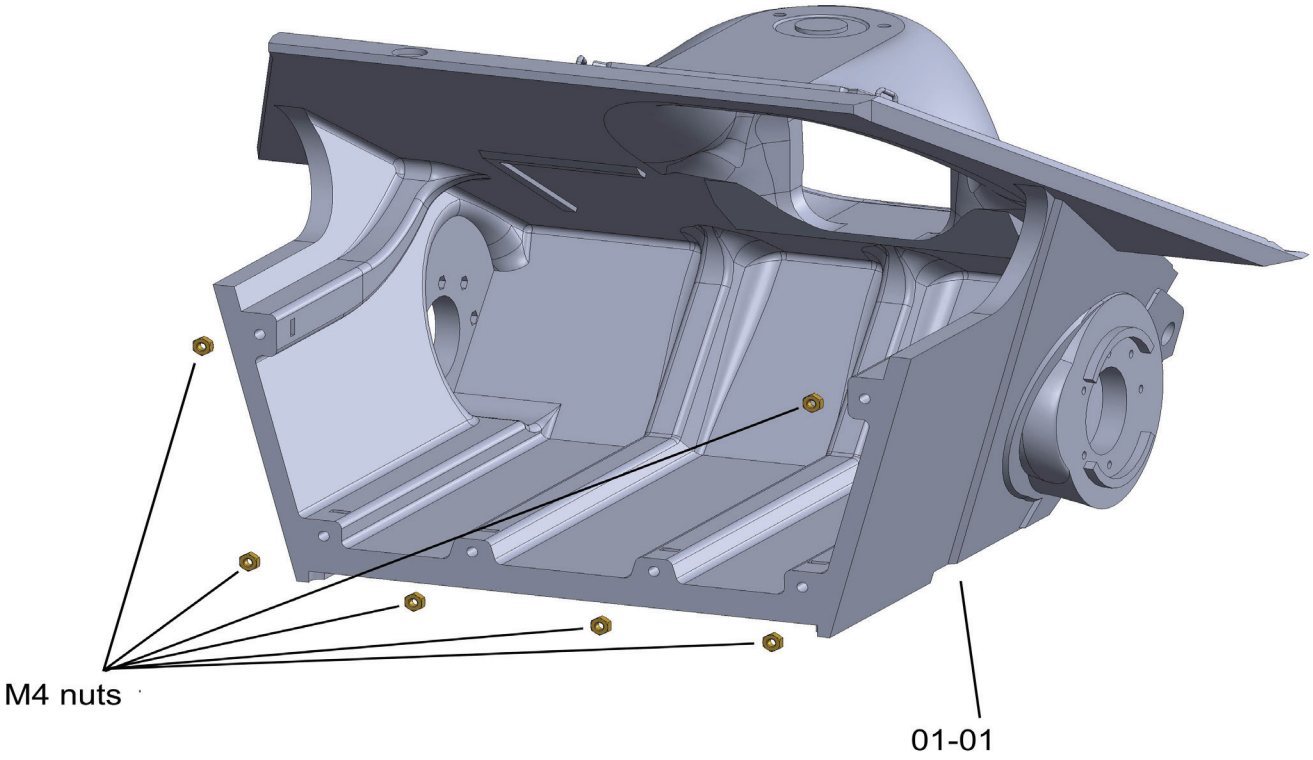

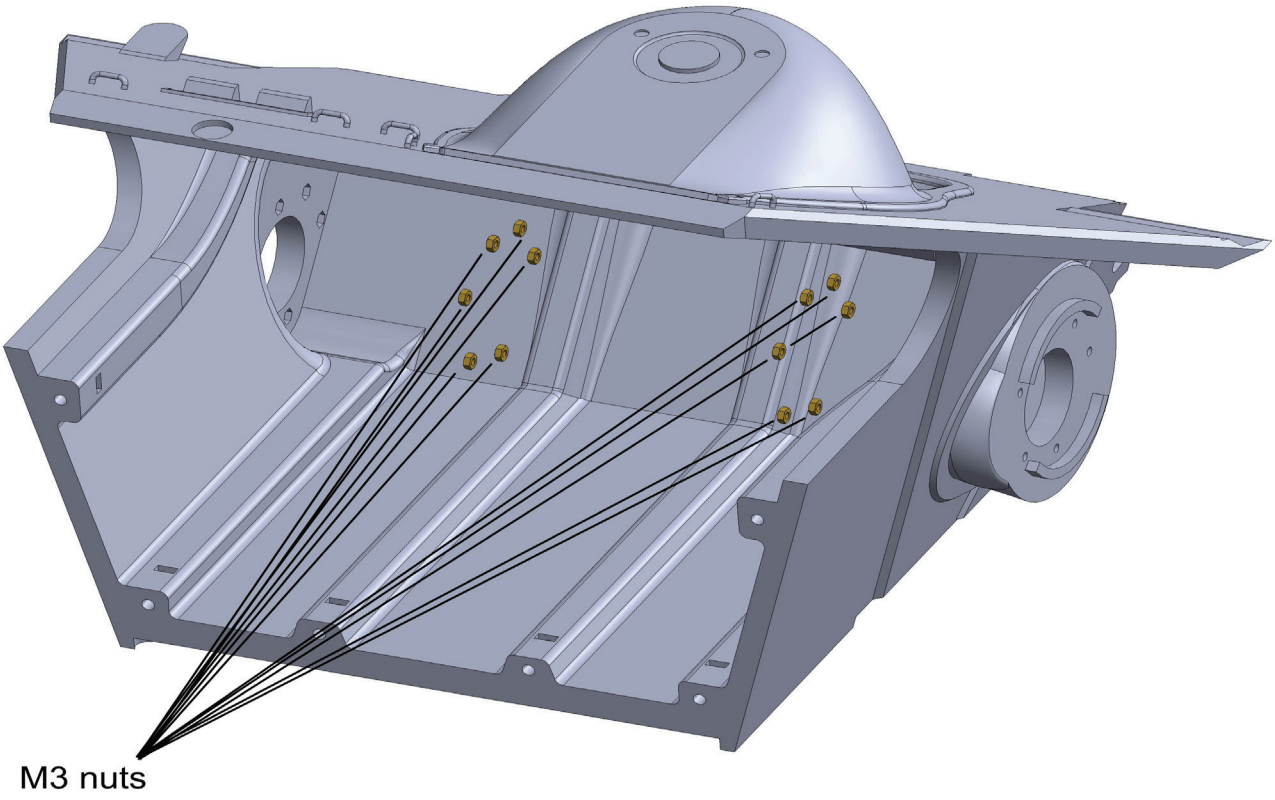

Insert 6 M4 nuts and 12 M3 nuts into the holes in part 01-01.

Chapter 01 - Lower hull

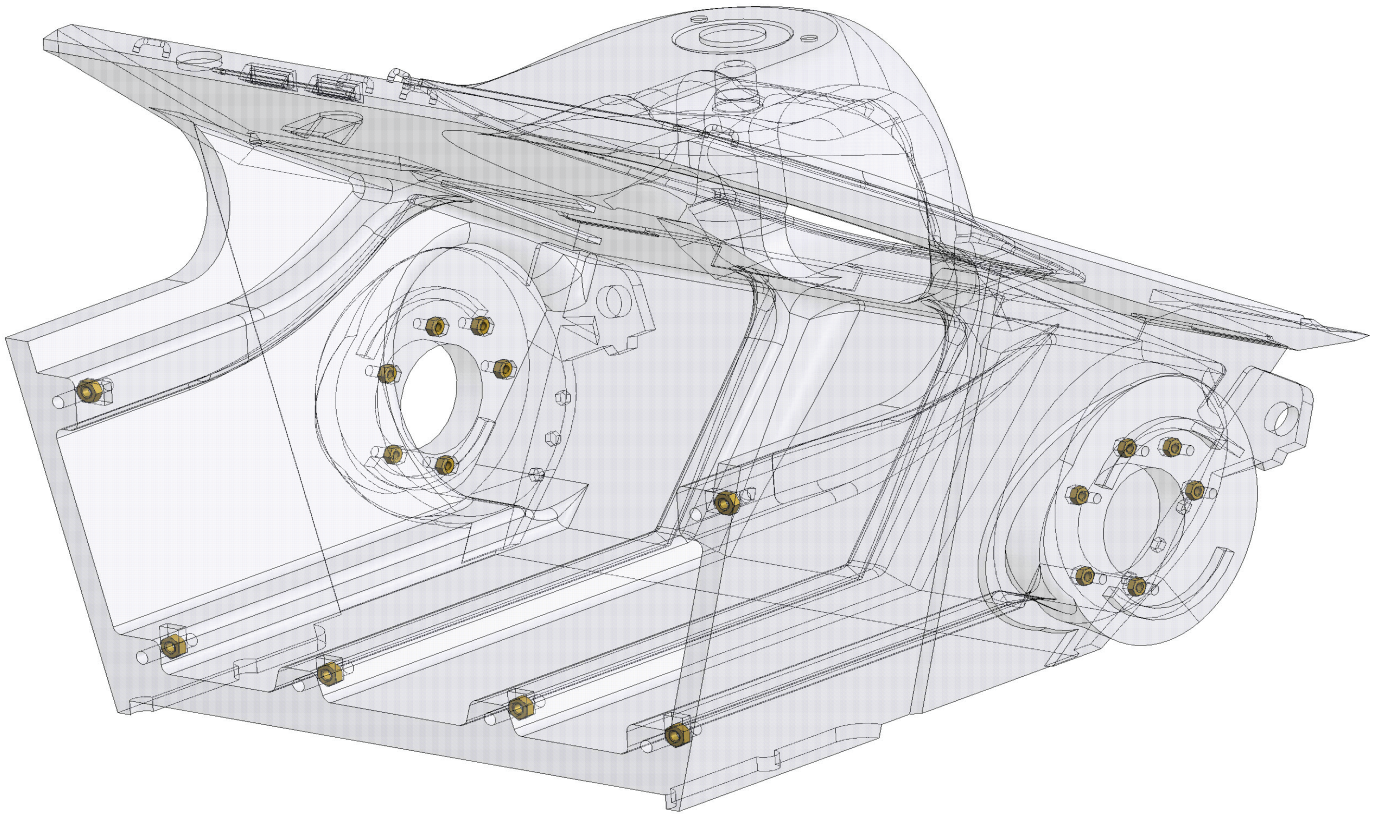

Correct position of the nuts.

Chapter 01 - Lower hull

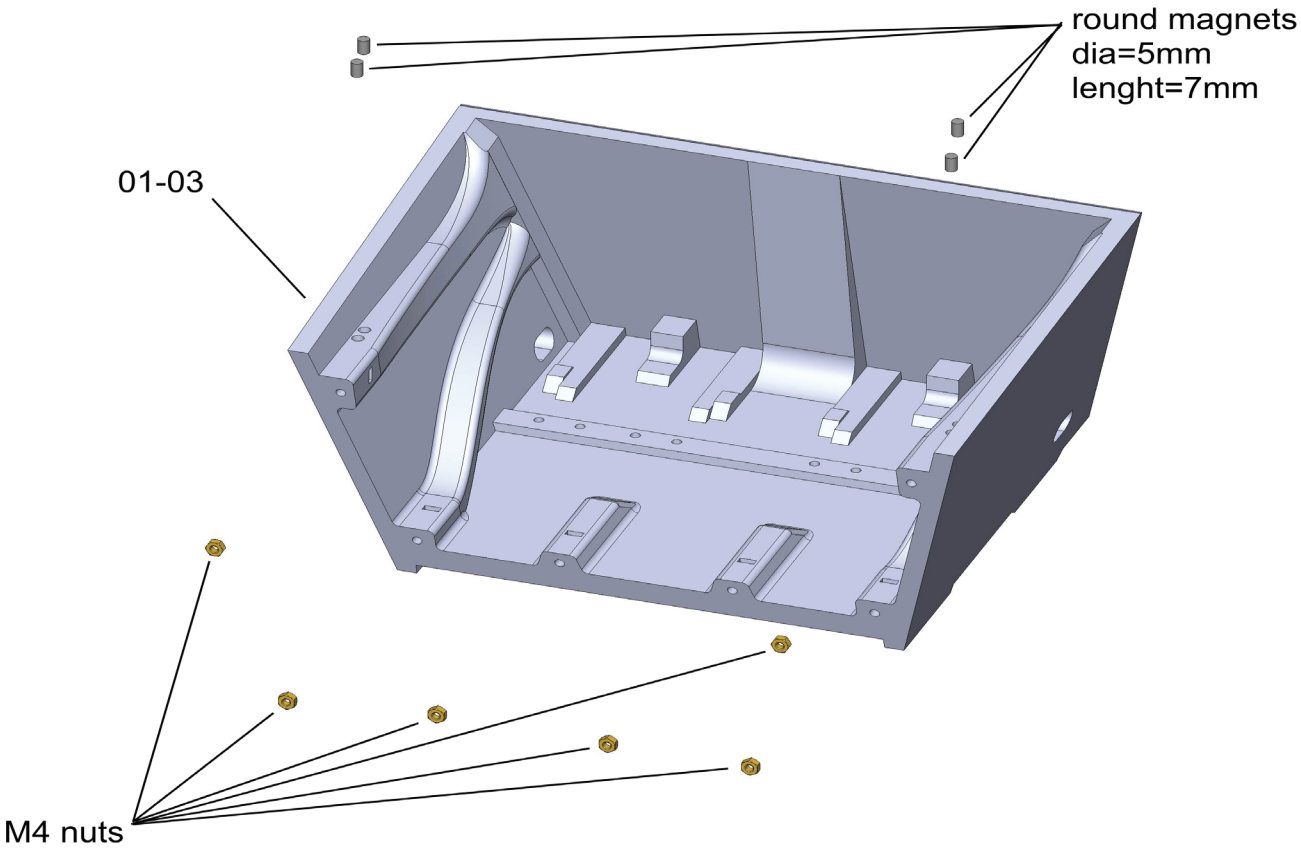

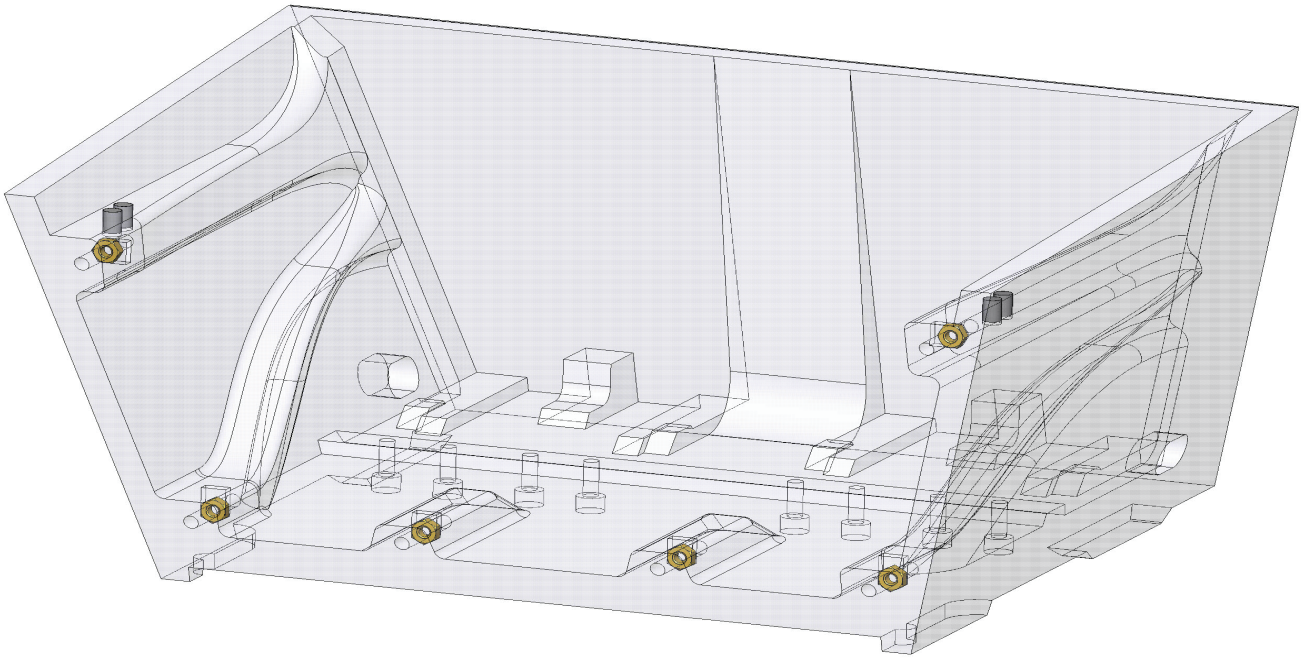

Insert 6 M4 nuts and glue 4 magnets of 5mm diameter and 7mm length into the holes in part 01-03.

Chapter 01 - Lower hull

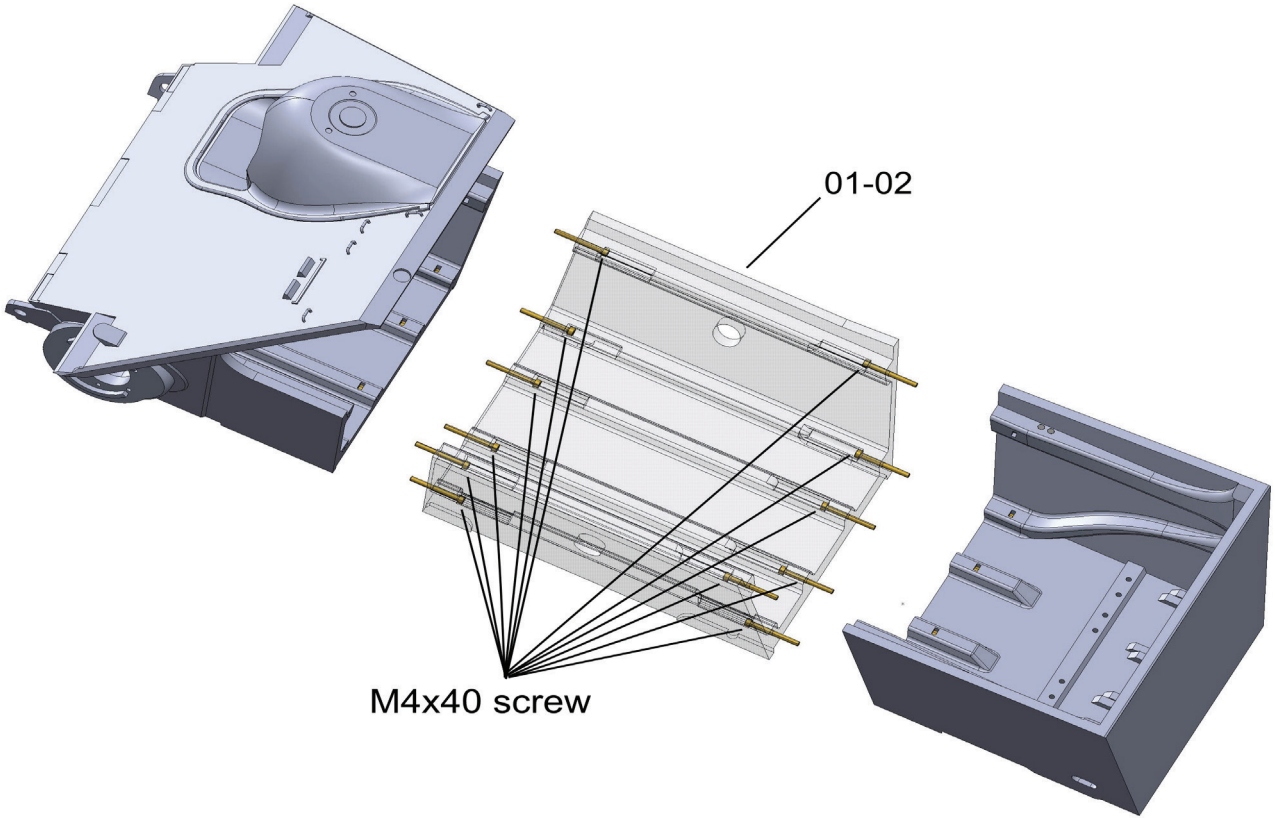

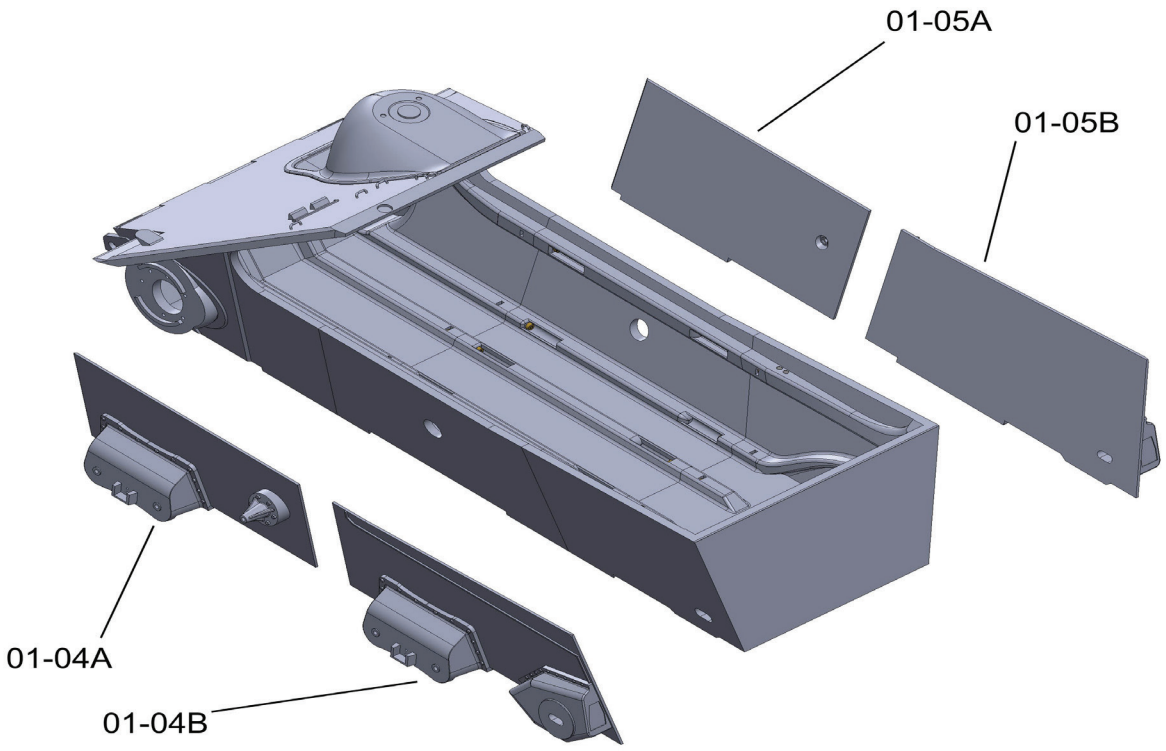

Connect parts 01-01, 01-02 and 01-03 with M4x40mm screws.
Align the parts and then glue parts 01-04A+B and 01-05A+B on the sides.

Chapter 01 - Lower hull

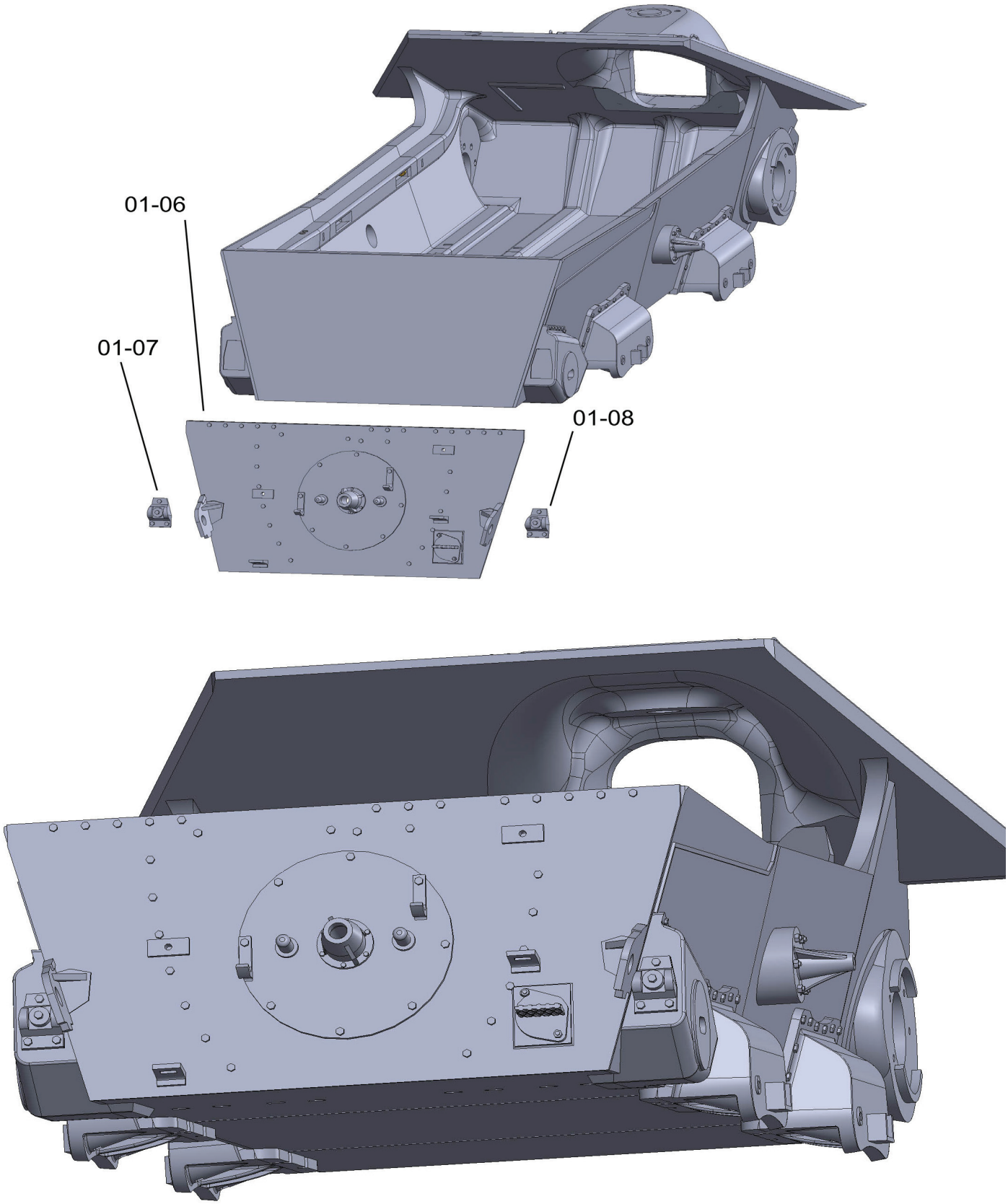

Glue parts 01-06, 01-07 and 01-08.

Chapter 01 - Lower hull

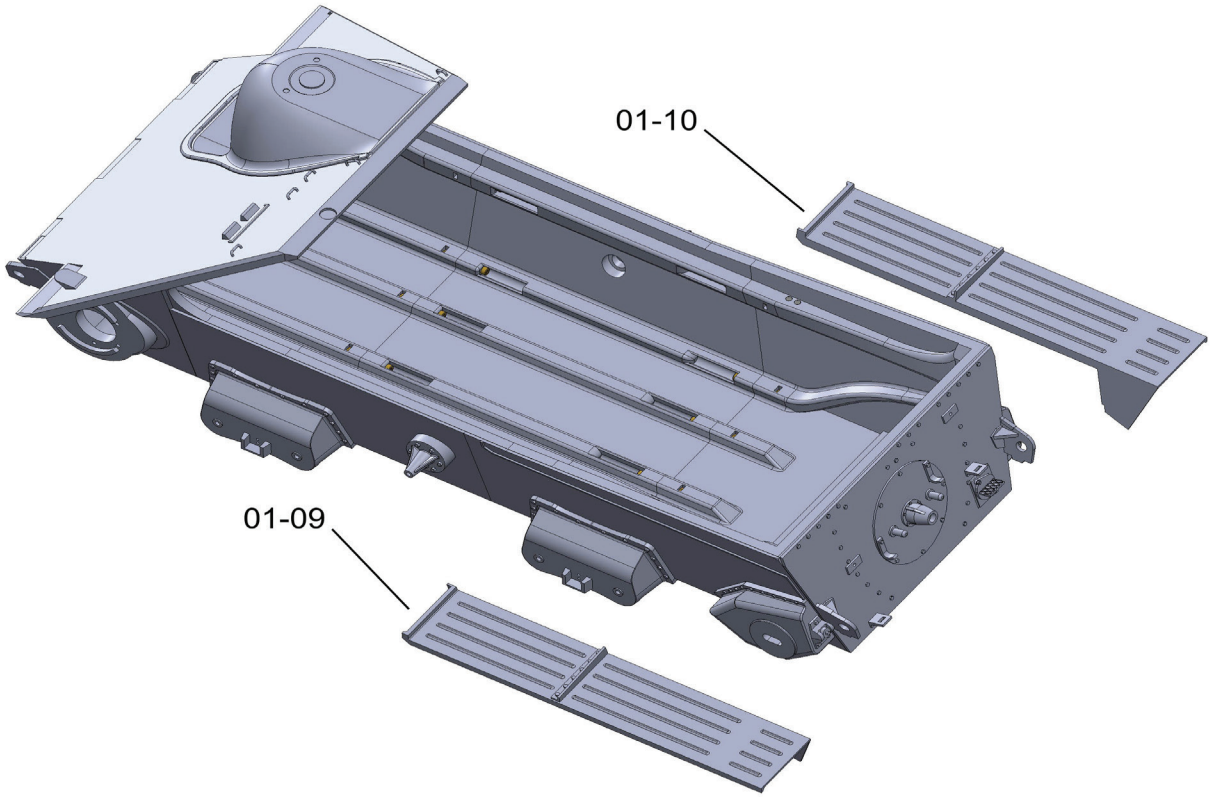

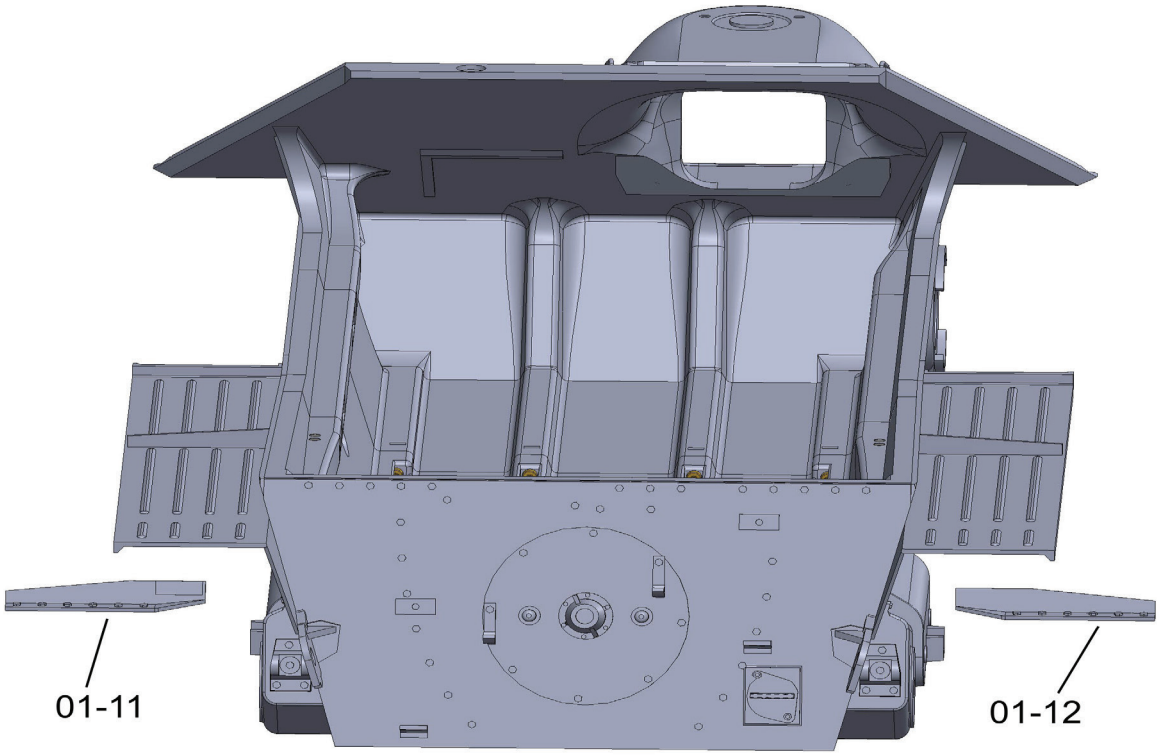

Glue parts 01-09, 01-10, 01-11 and 01-12.

Chapter 01 - Lower hull

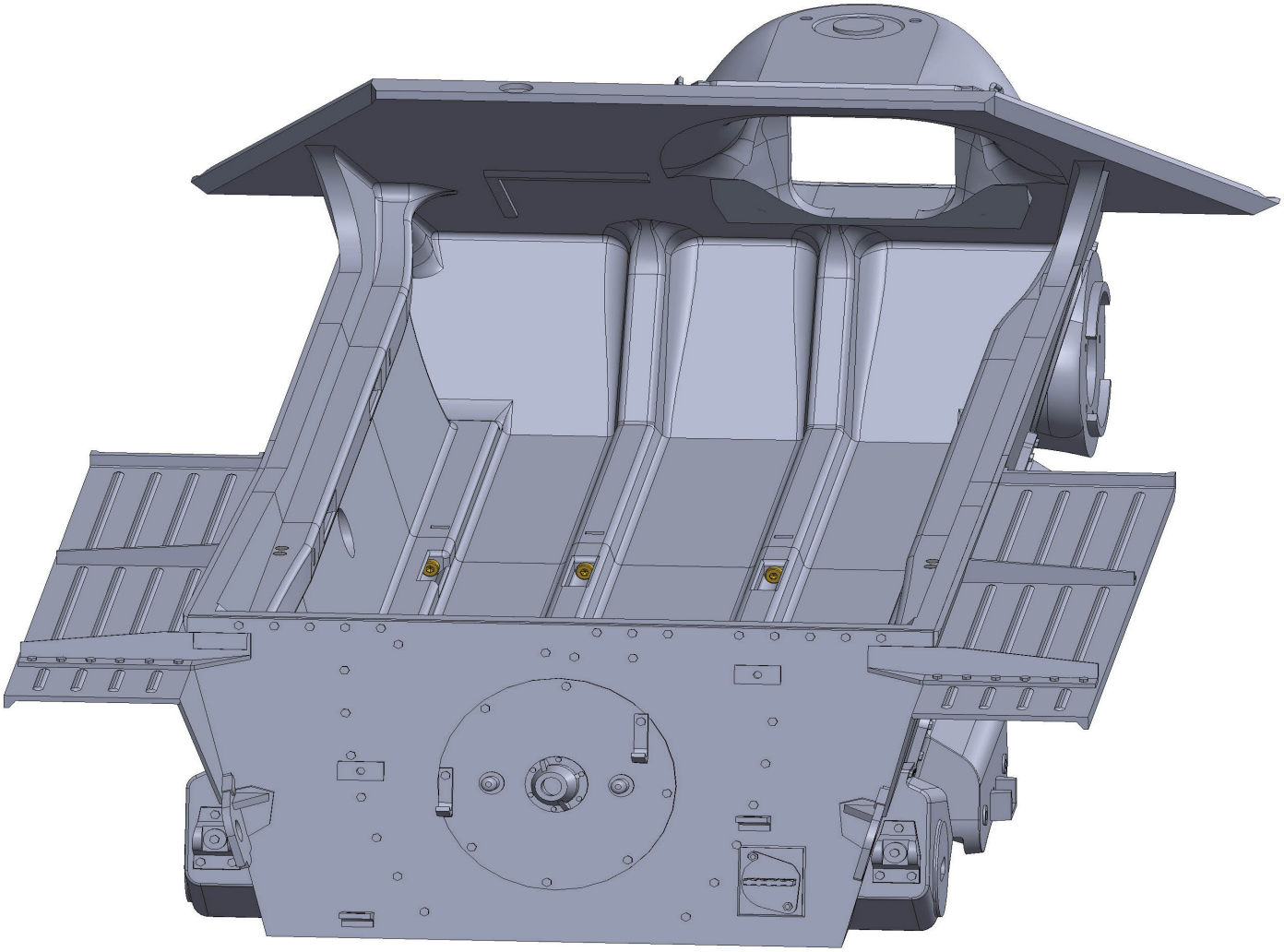

Correct position of the parts 01-09 to 01-12.

Chapter 01 - Lower hull

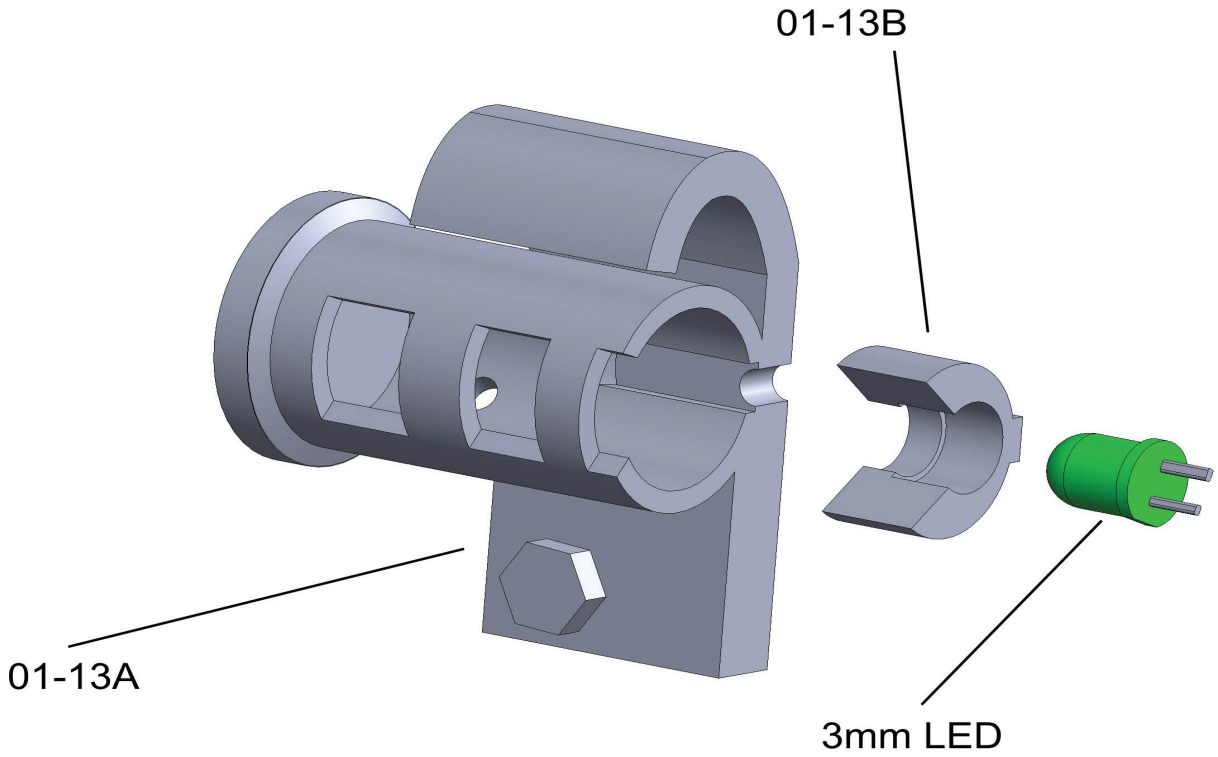

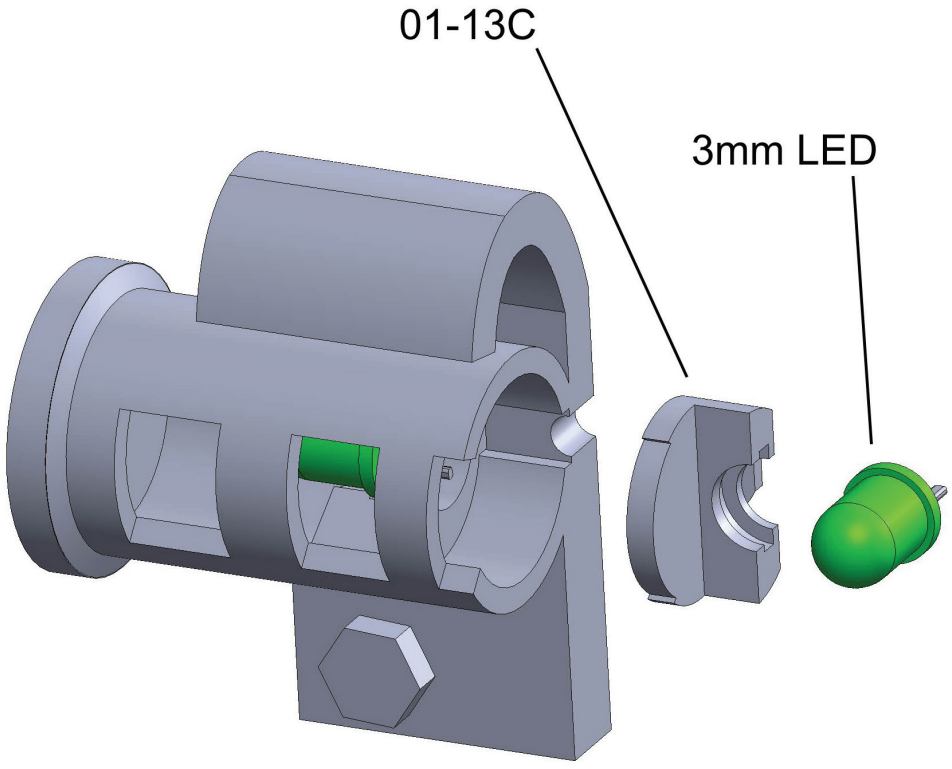

Insert 3mm LED diode into the part 01-13B.Insert part 01-13B to part 01-13A.
Insert part 01-13C and add another LED.

Chapter 01 - Lower hull

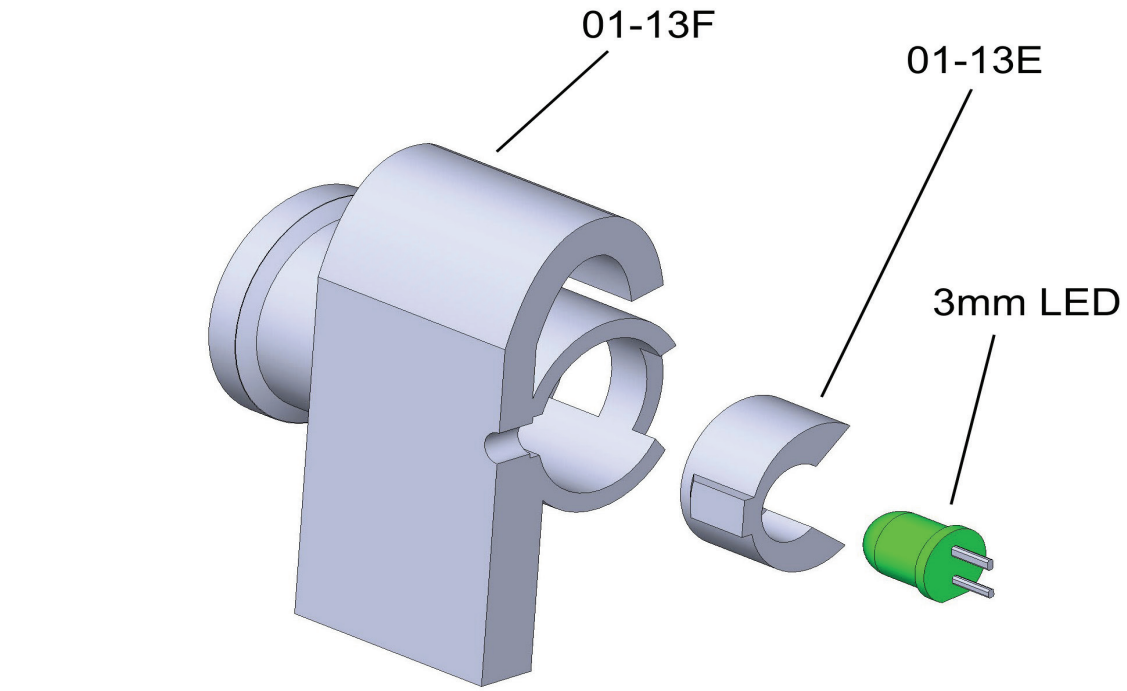

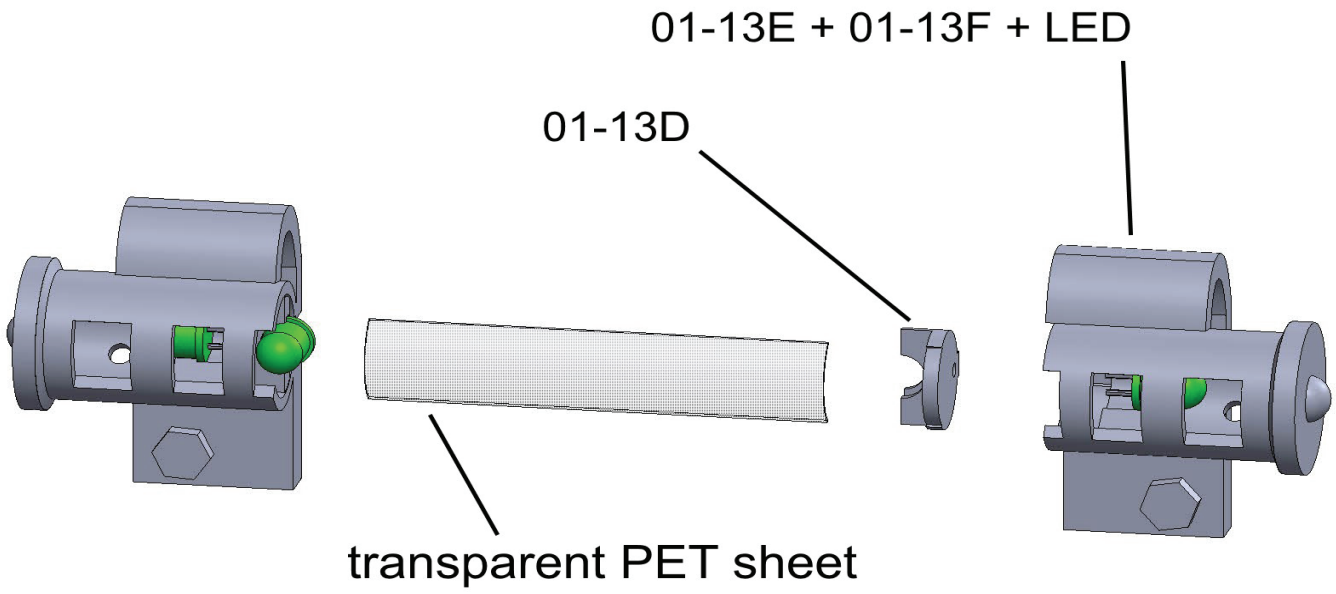

Insert 3mm LED diode into the part 01-13E.Insert part 01-13E to part 01-13F.
Insert part 01-13D and transparent sheet for lights.
Glue parts 01-13A and 01-13F together.

Chapter 01 - Lower hull

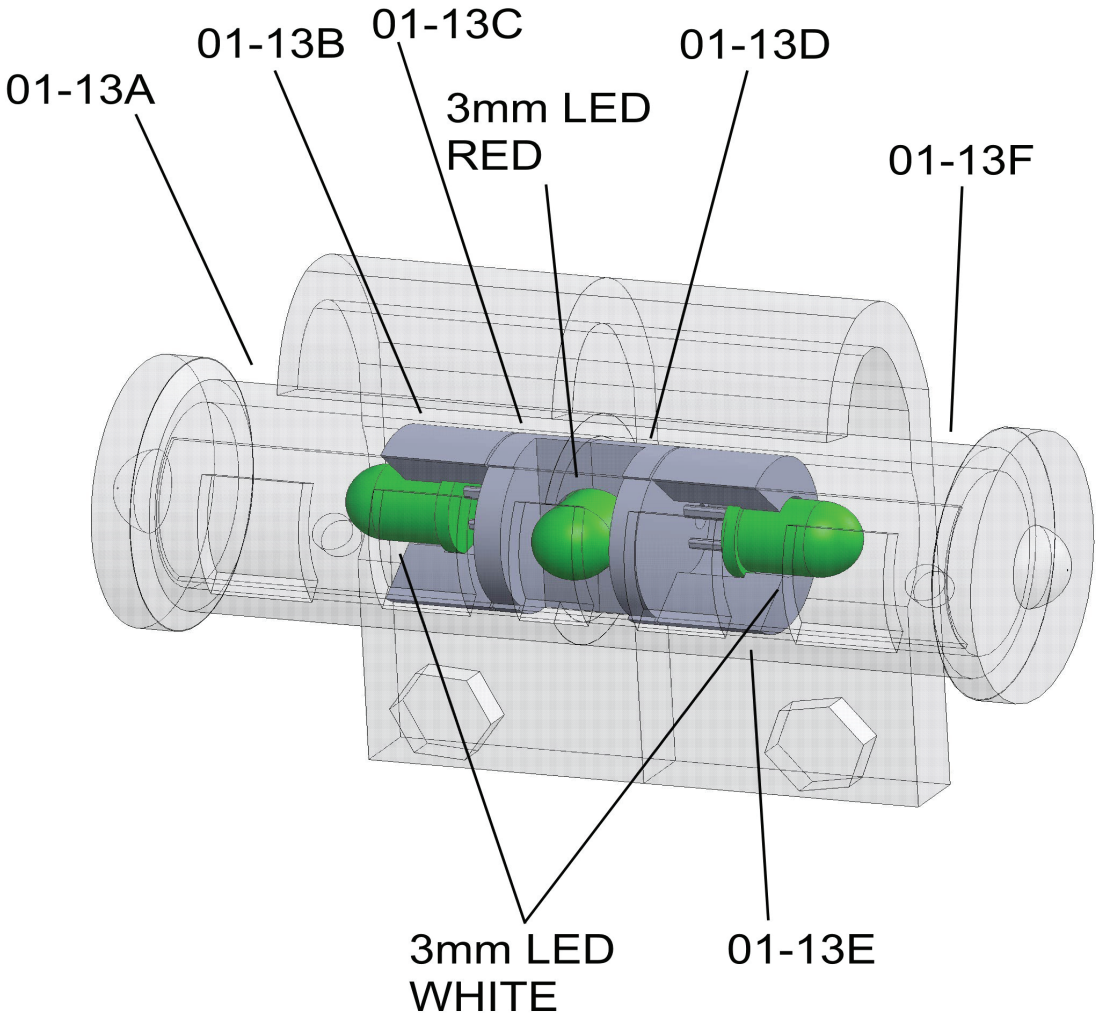

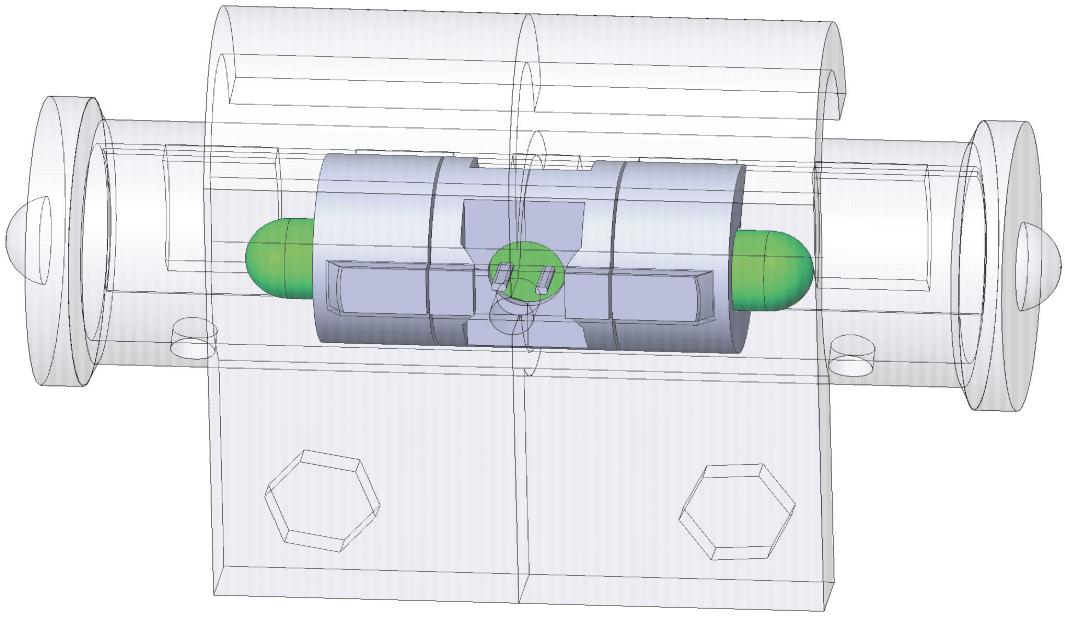

Correct position of the parts 01-13A to 01-13F.

Chapter 01 - Lower hull

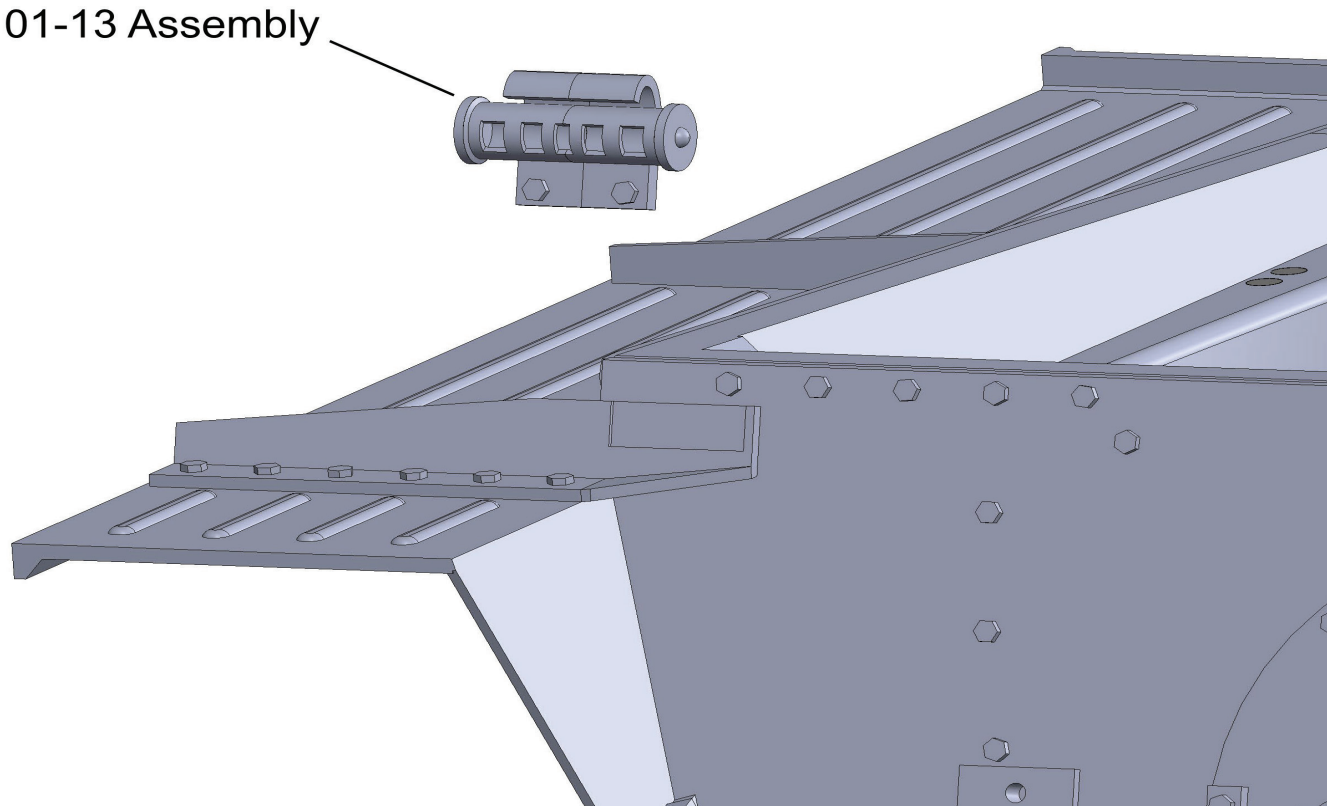

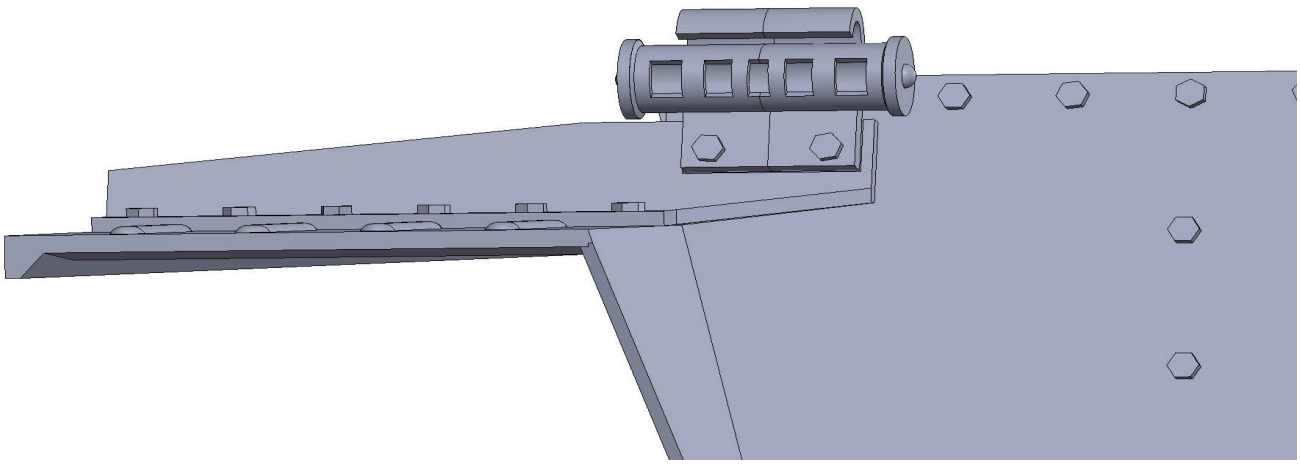

Glue assembly 01-13.

Chapter 01 - Lower hull

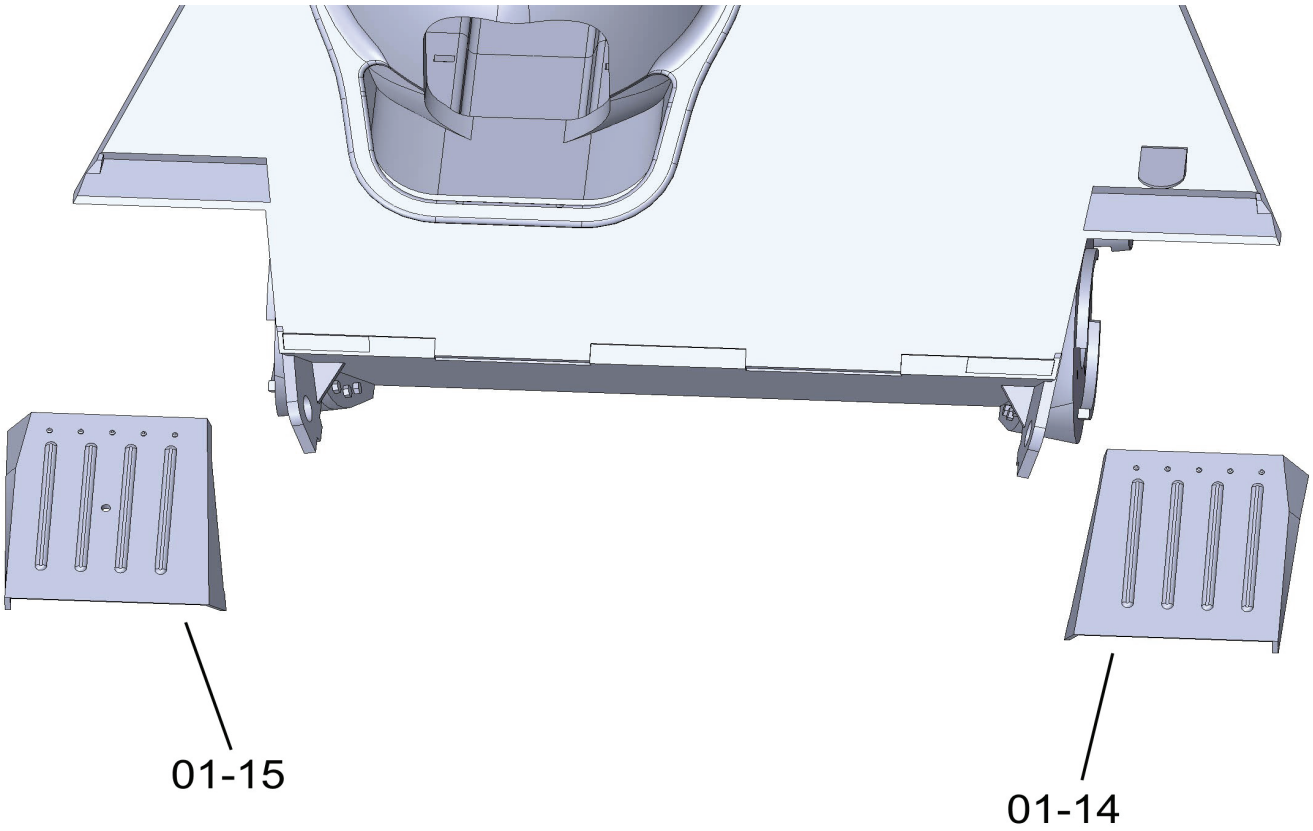

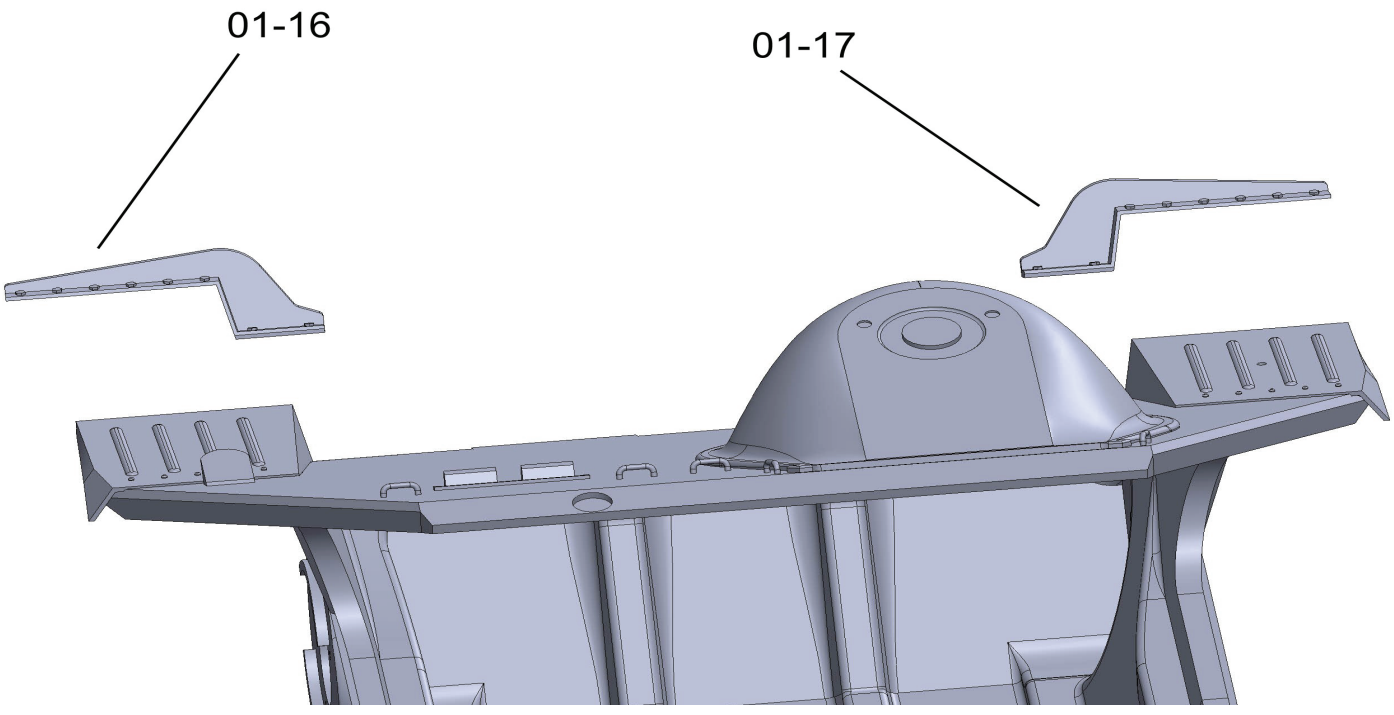

Glue parts 01-14, 01-15, 01-16 and 01-17.

Chapter 01 - Lower hull

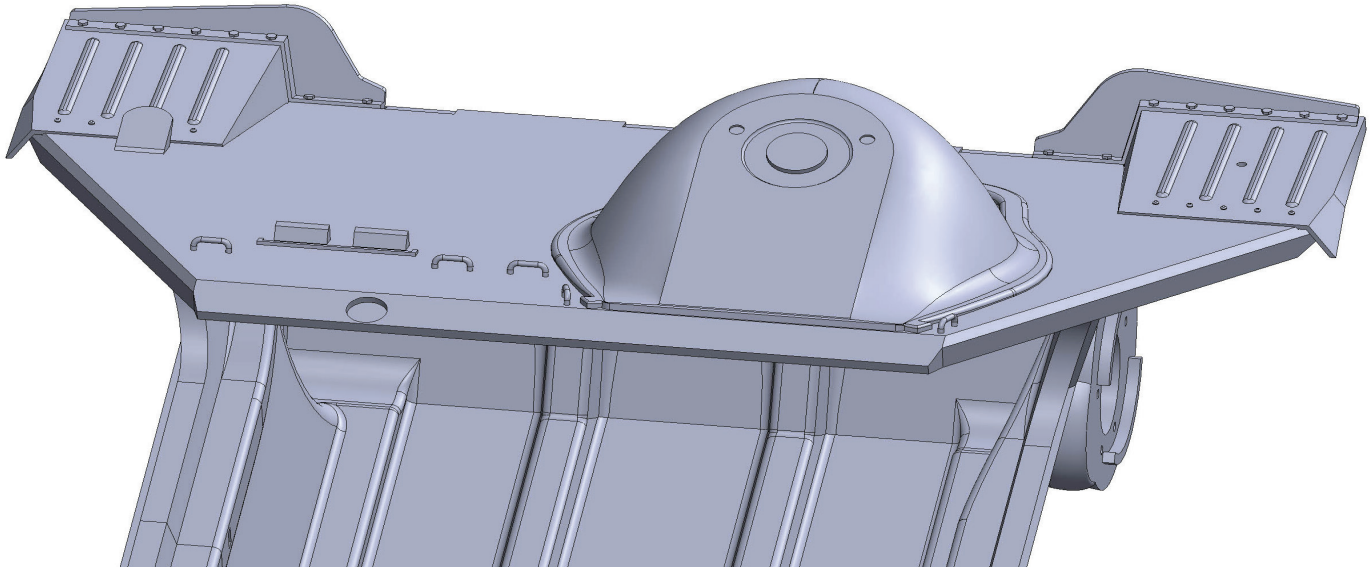

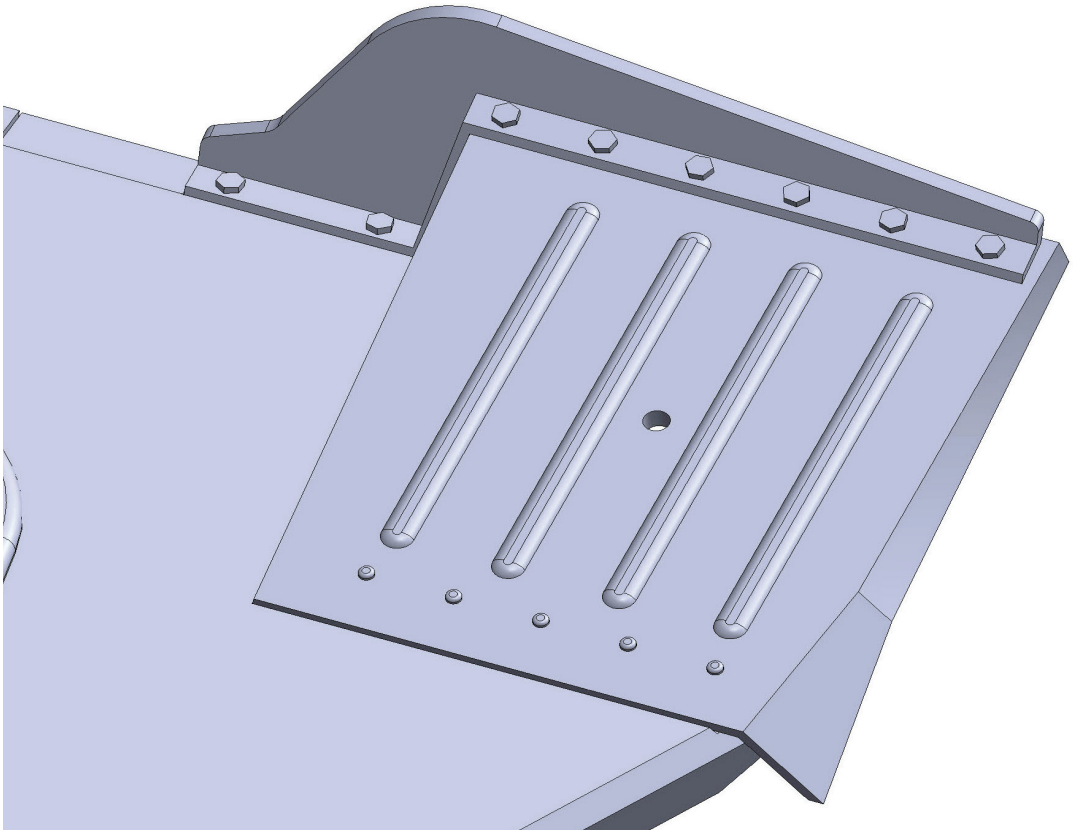

Correct position of parts 01-14 to 01-17.

Chapter 01 - Lower hull

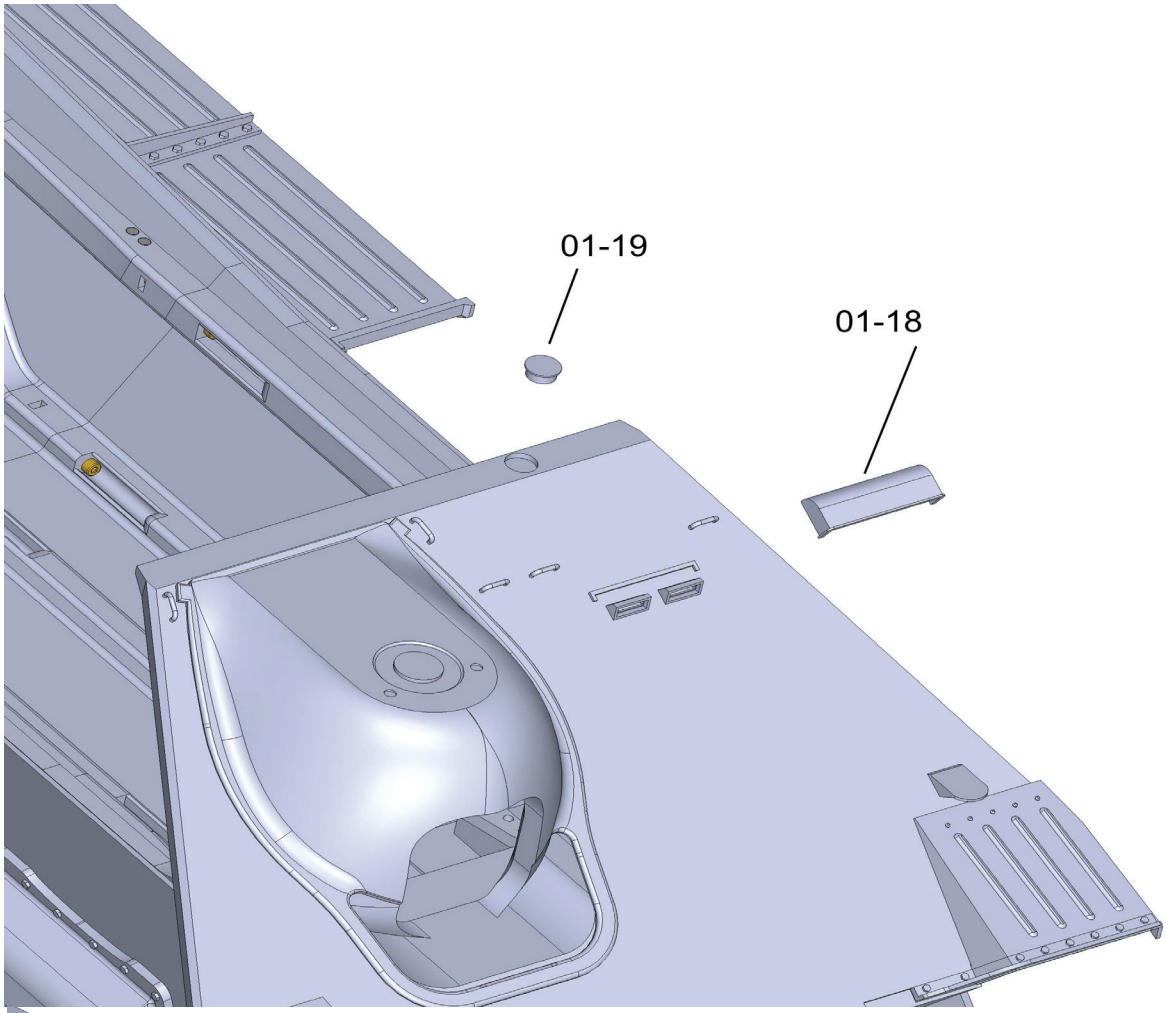

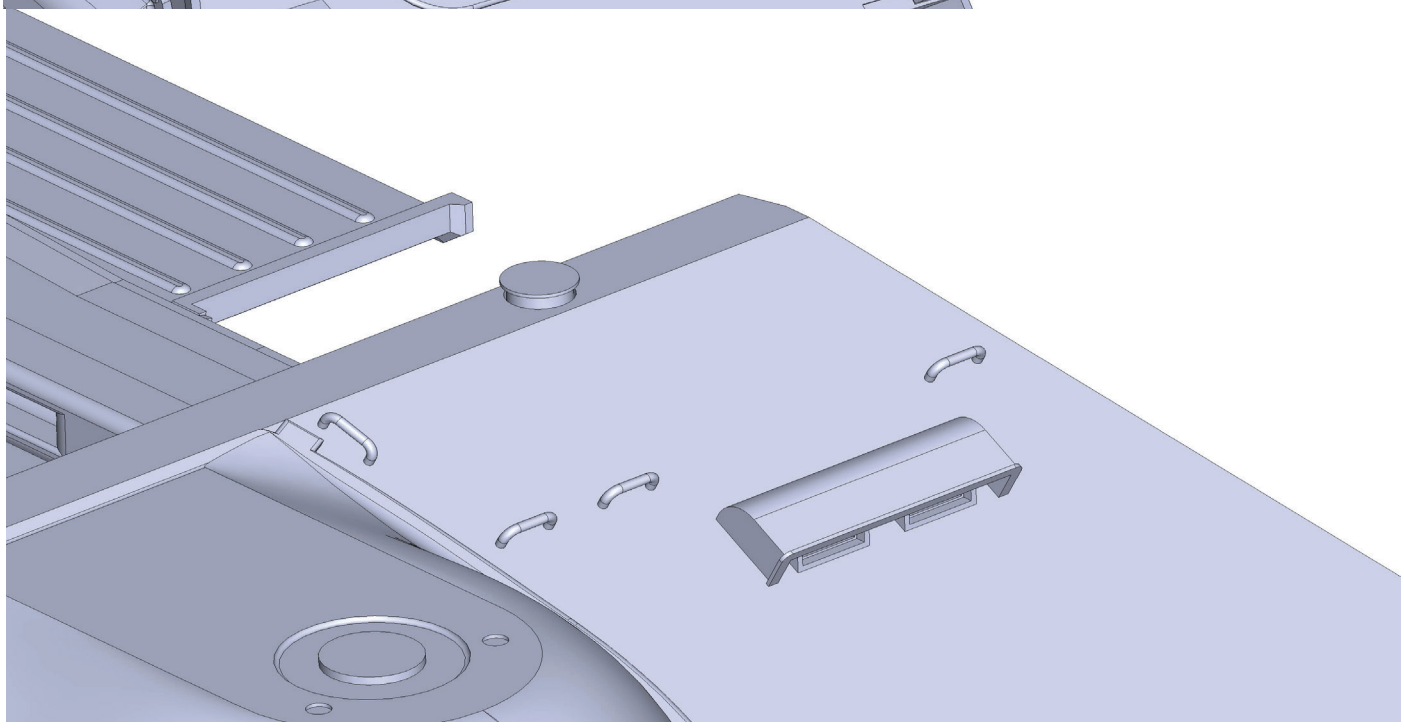

Glue parts 01-18 and 01-19.

Chapter 01 - Lower hull

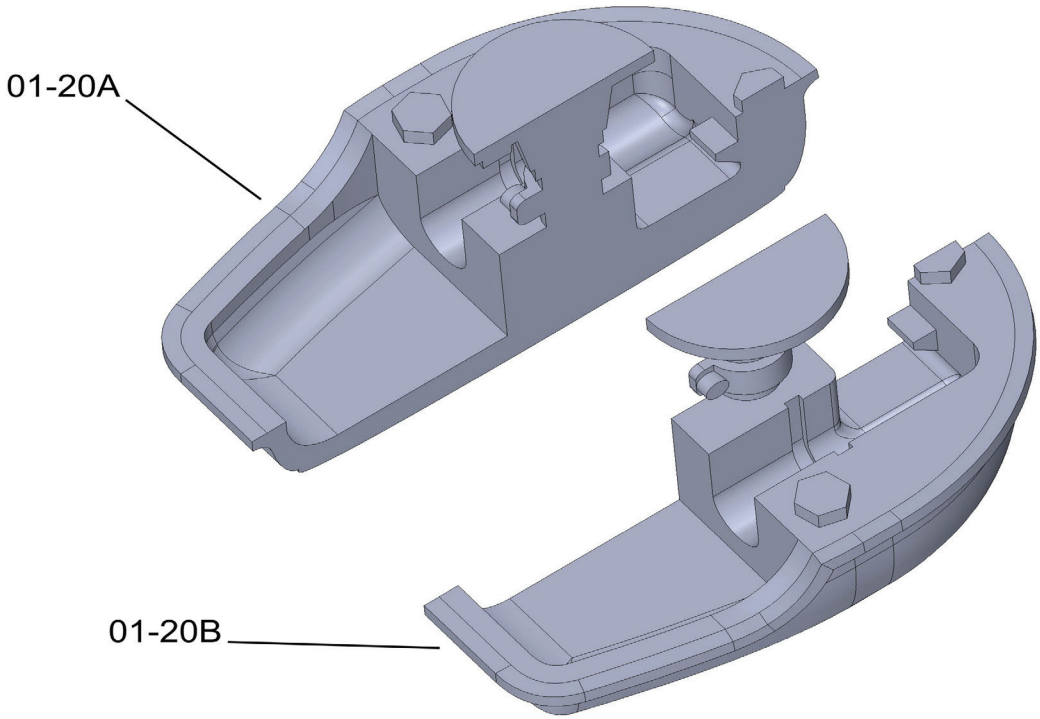

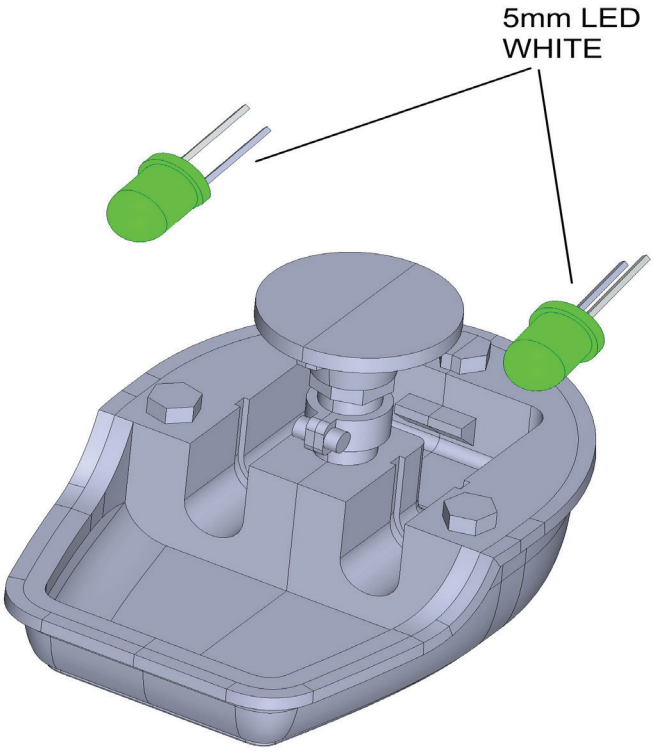

Bond parts 01-20A and 01-20B.
Insert two 5mm LED diodes.

Chapter 01 - Lower hull

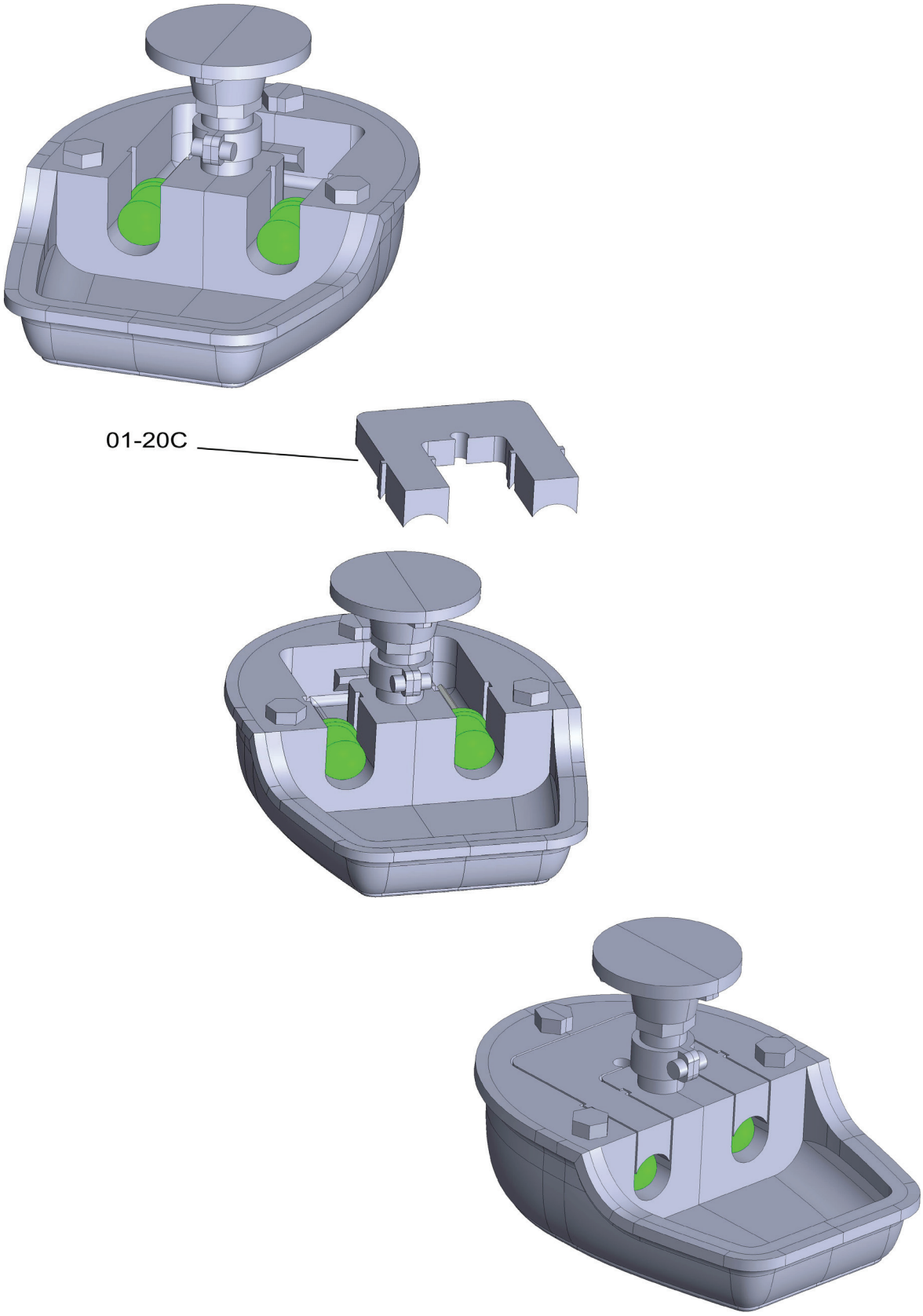

Add part 01-20C.This part will fix diodes on the place.

Chapter 01 - Lower hull

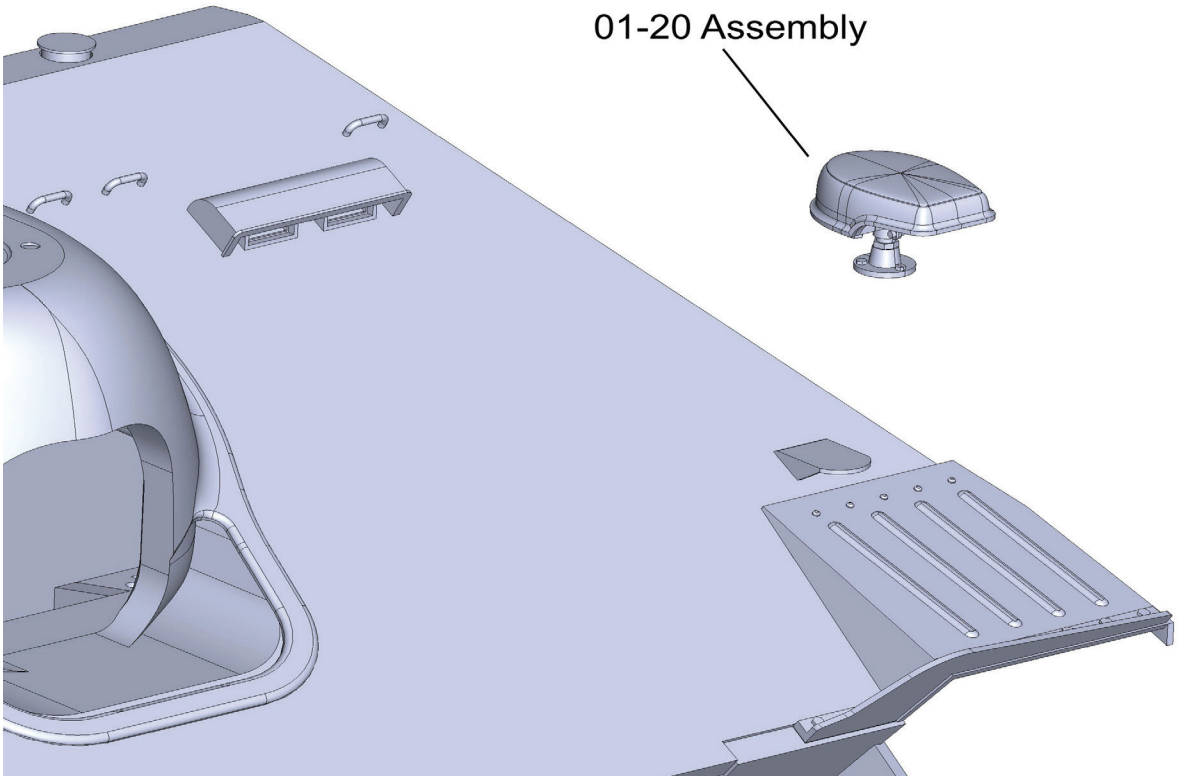

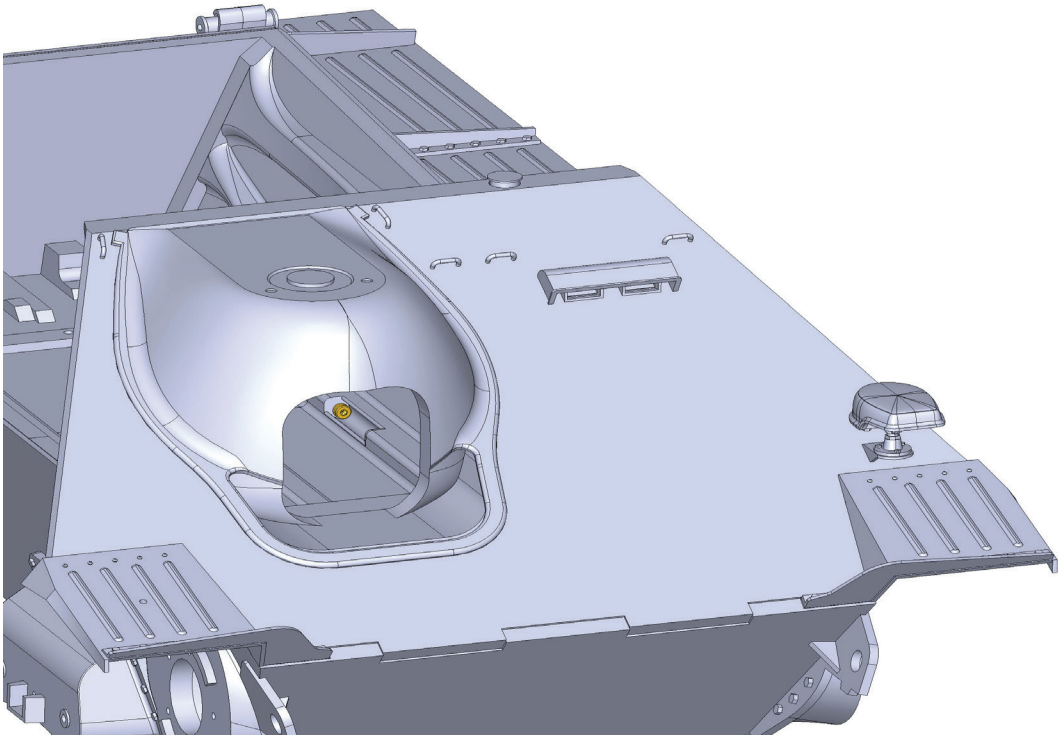

Glue assembly 01-20 in place above the fender.

Chapter 01 - Lower hull

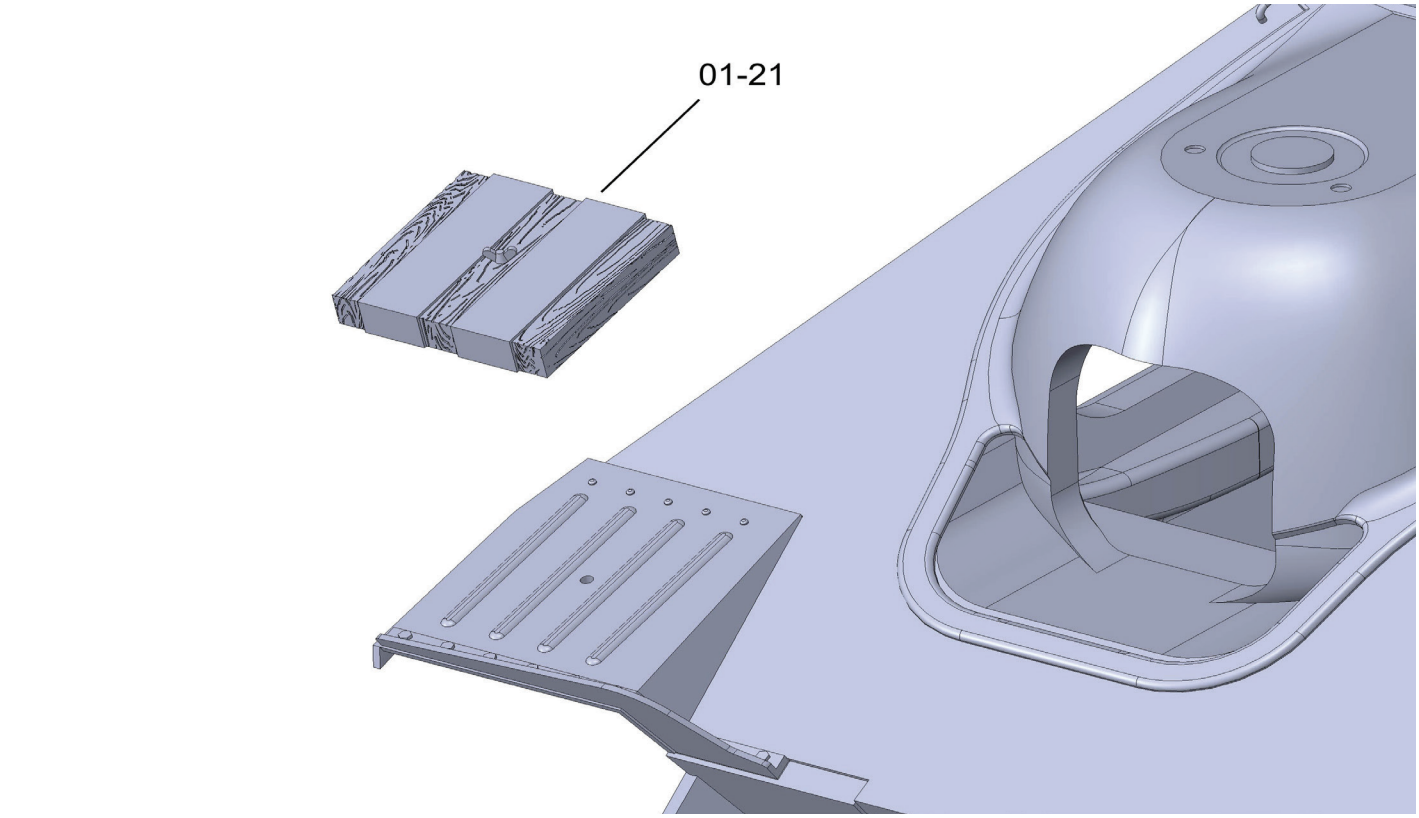

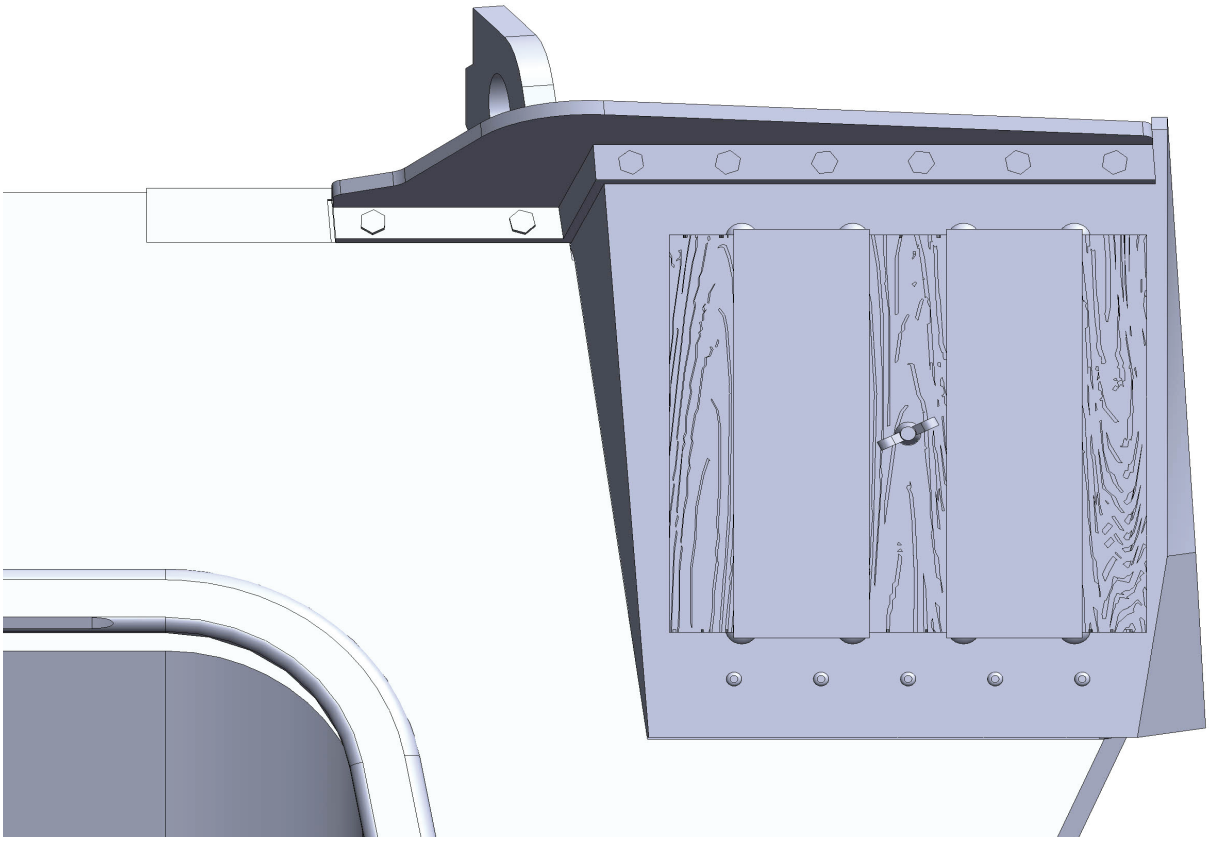

Glue part 01-21.

Chapter 01 - Lower hull

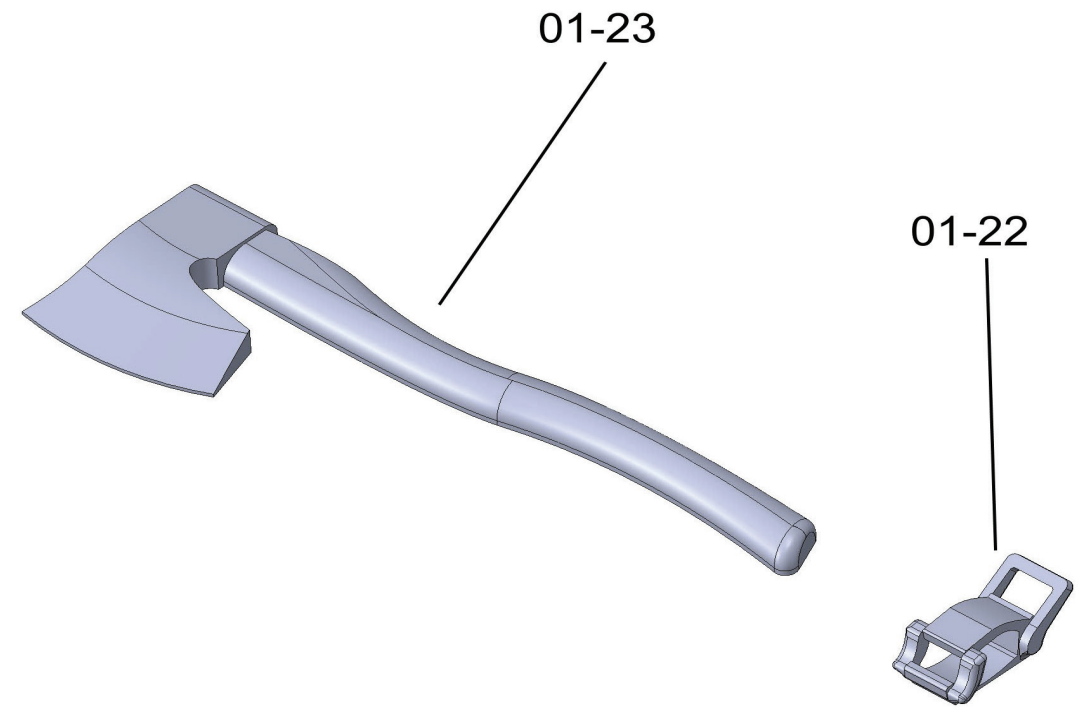

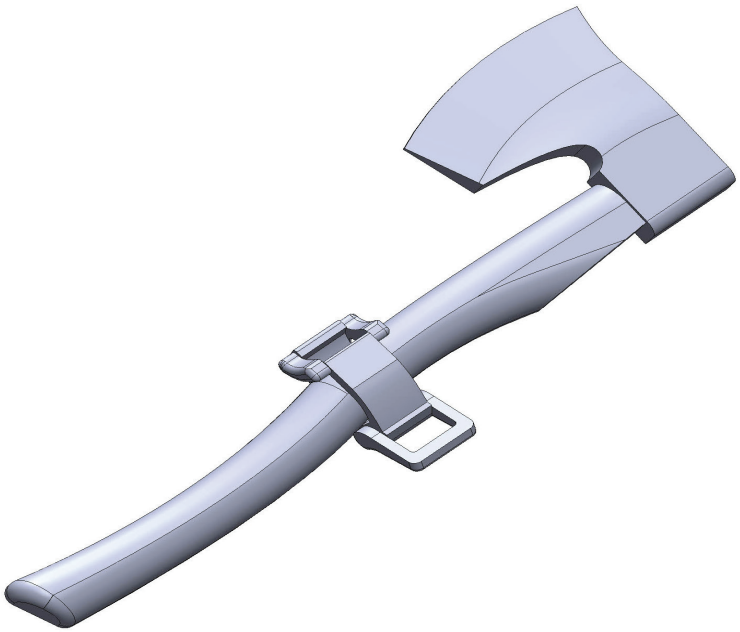

Glue parts 01-22 and 01-23 together.

Chapter 01 - Lower hull

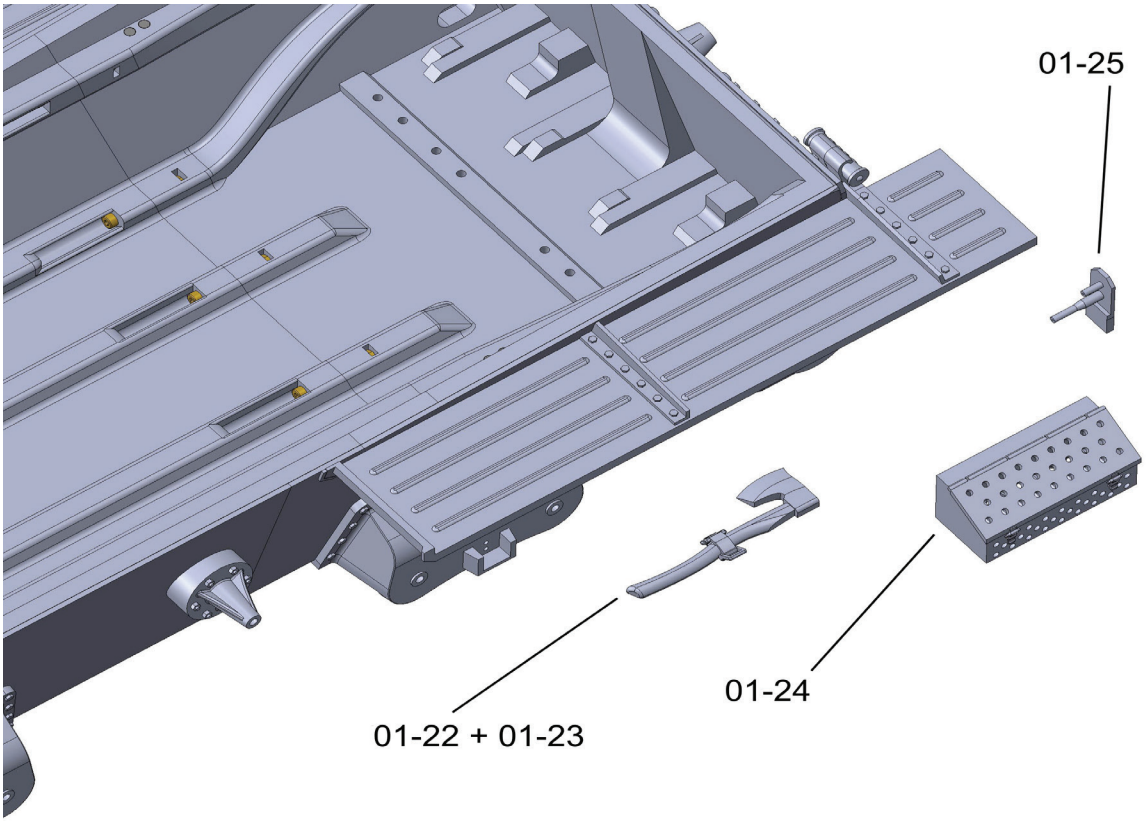

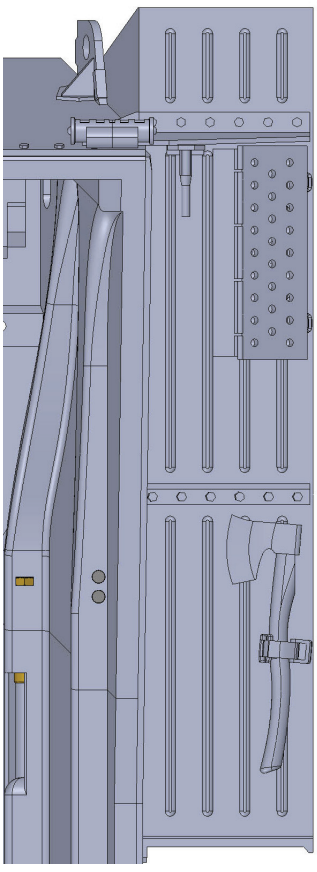

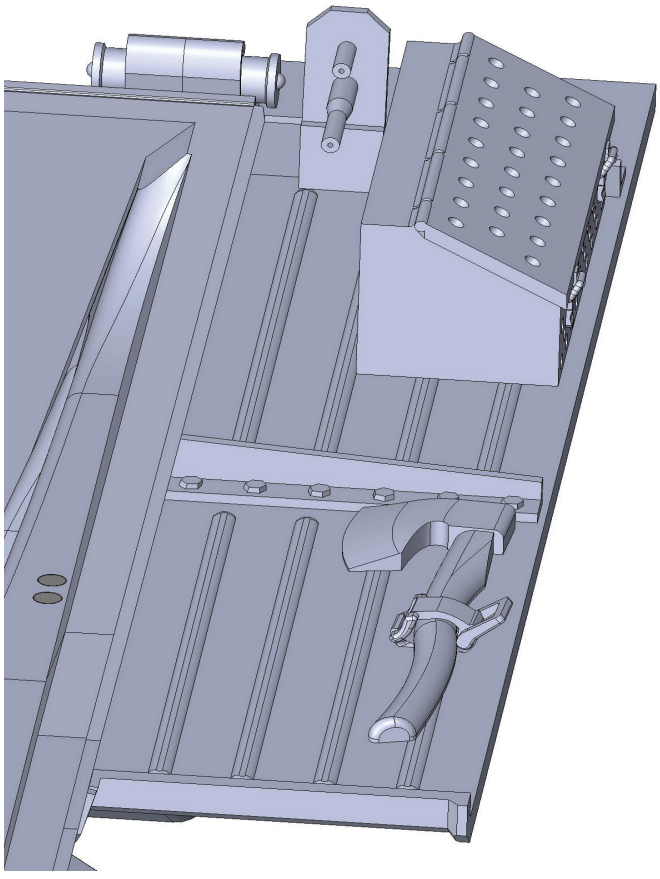

Glue parts 01-22 to 01-25.

Chapter 01 - Lower hull

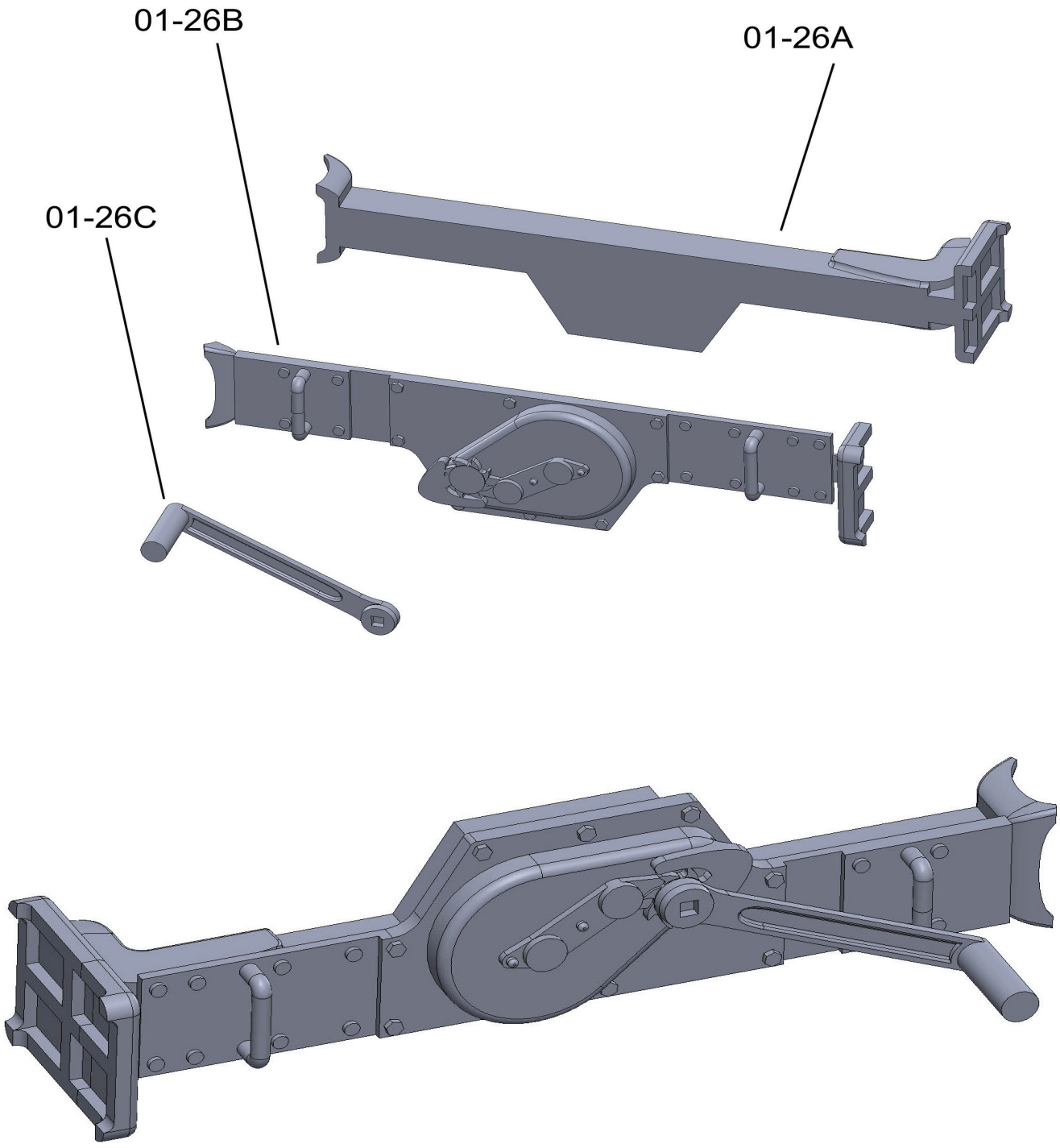

Stick parts 01-26A, 01-26B and 01-26C together.

Chapter 01 - Lower hull

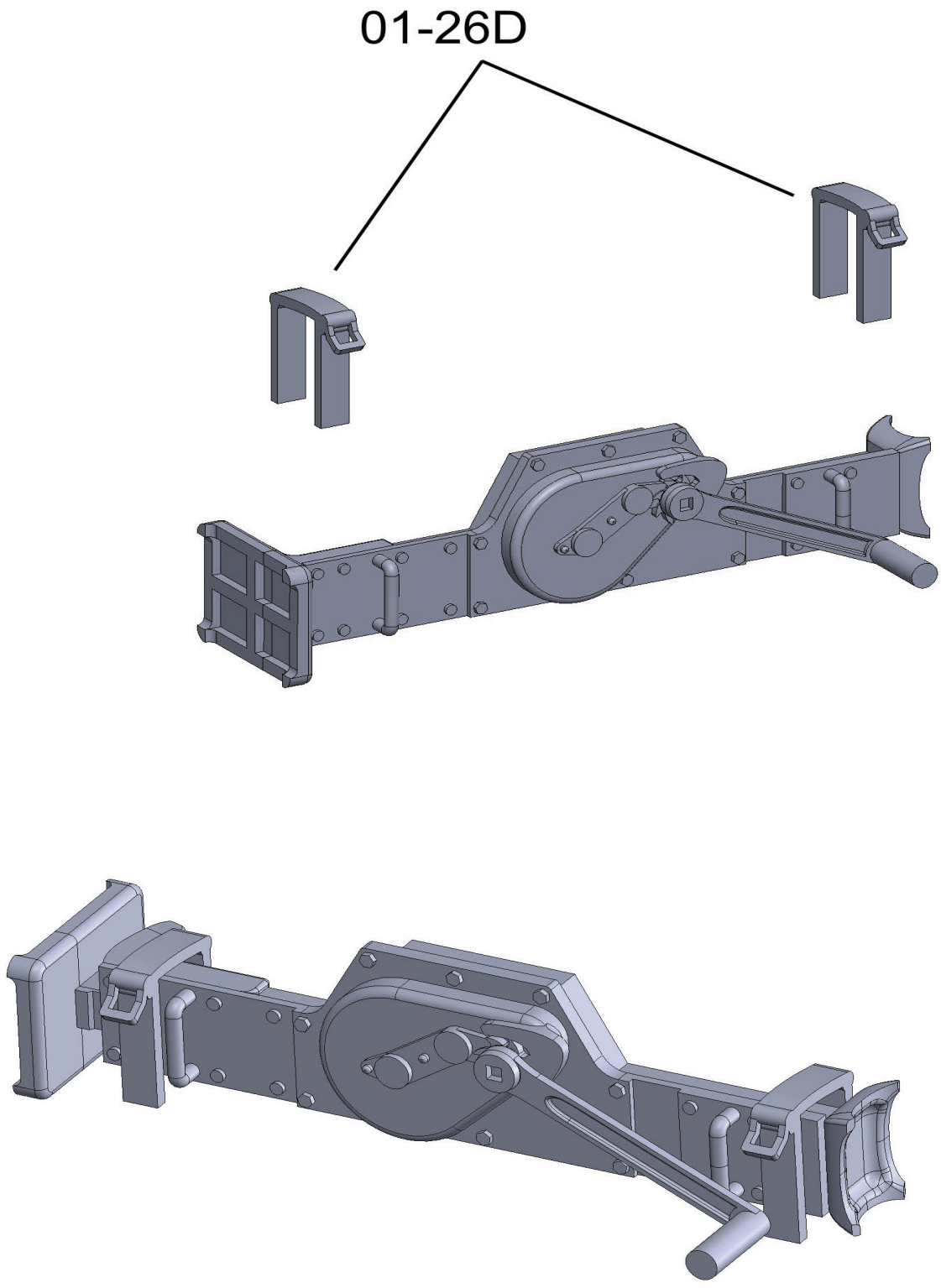

Glue two parts of 01-26D.

Chapter 01 - Lower hull

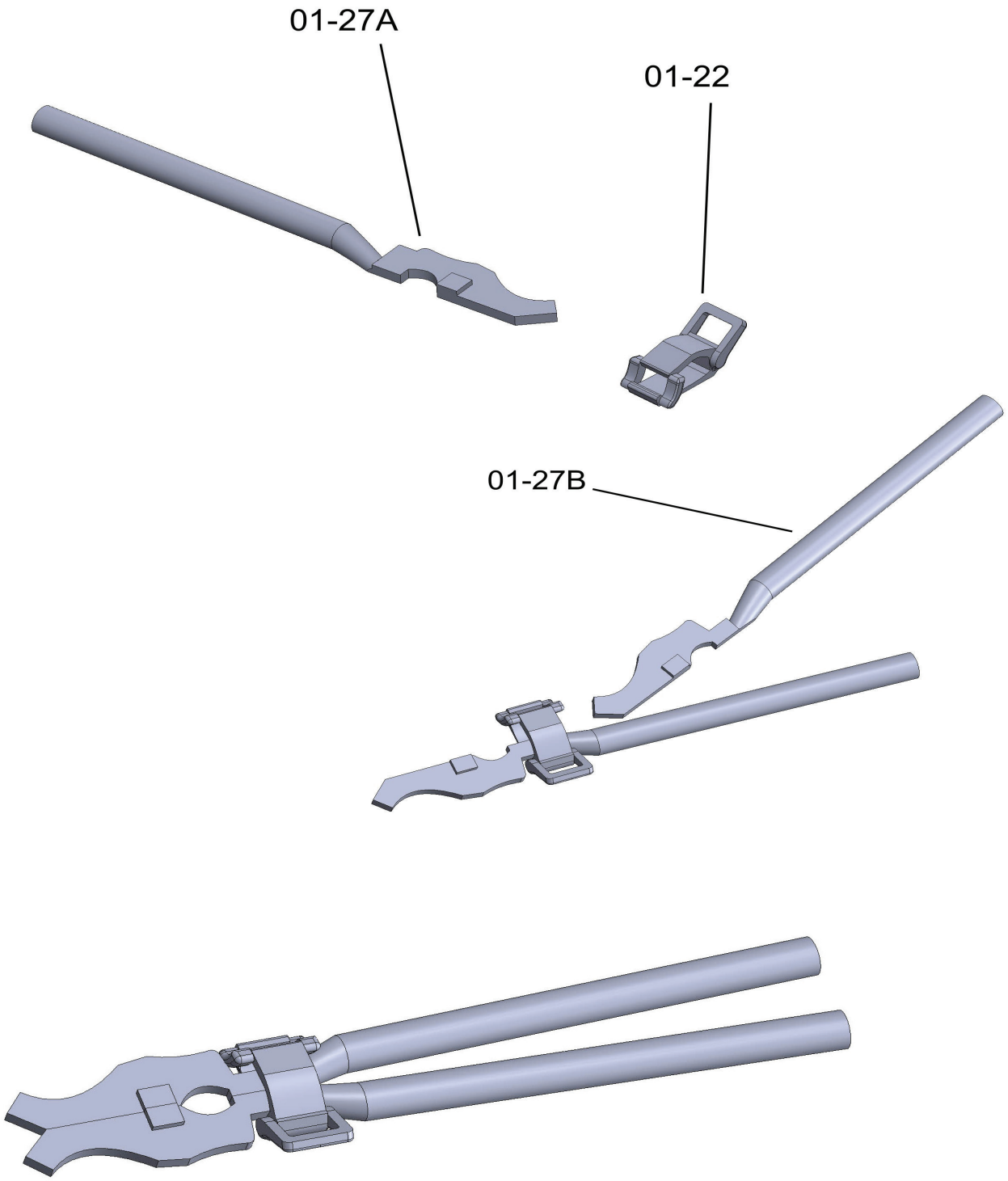

Insert part 01-27A into part 01-22. Then carefully insert part 01-27B.
Glue the whole together.

Chapter 01 - Lower hull

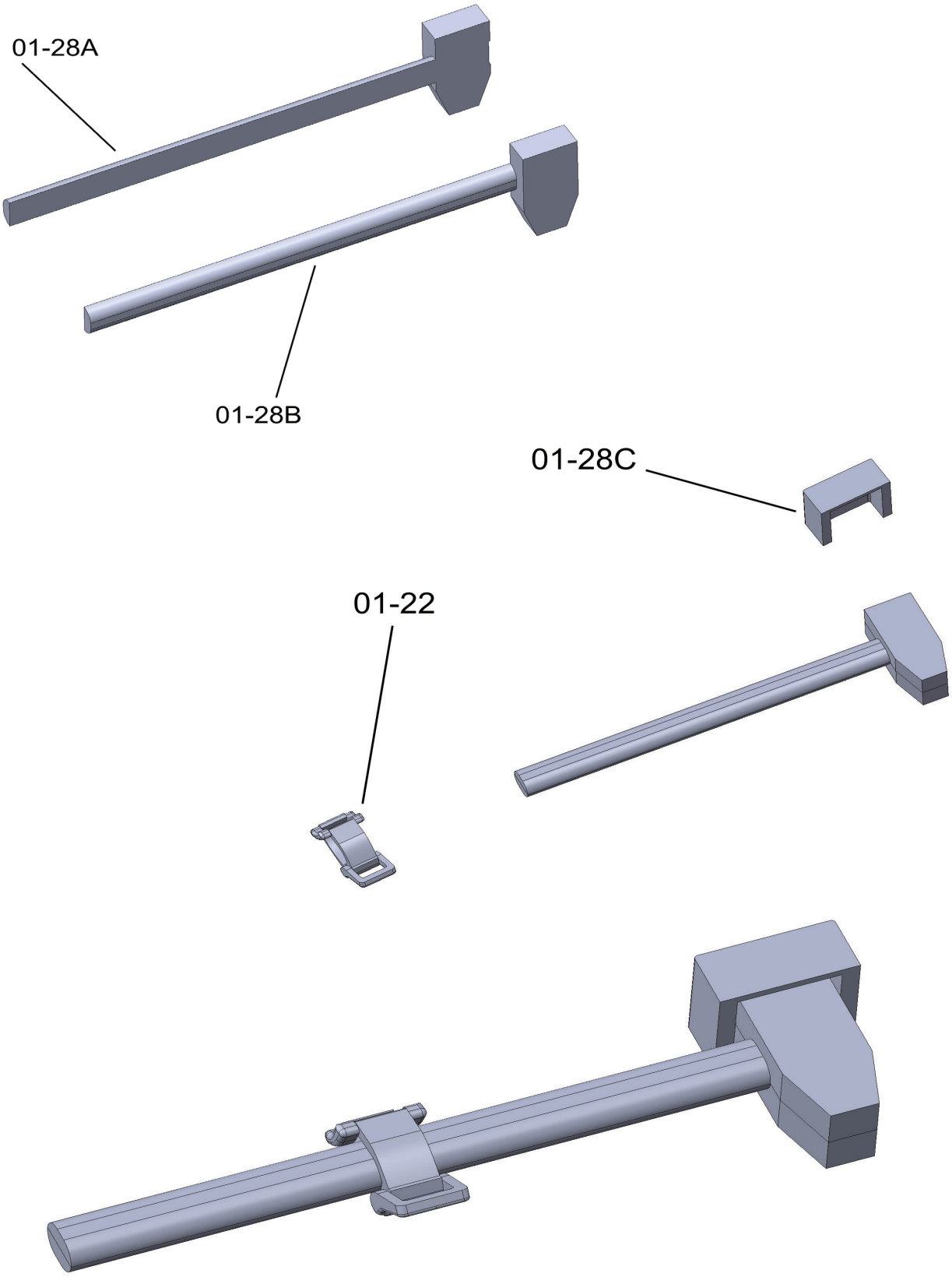

Glue parts 01-28A to 01-28C, together with part 01-22.

Chapter 01 - Lower hull

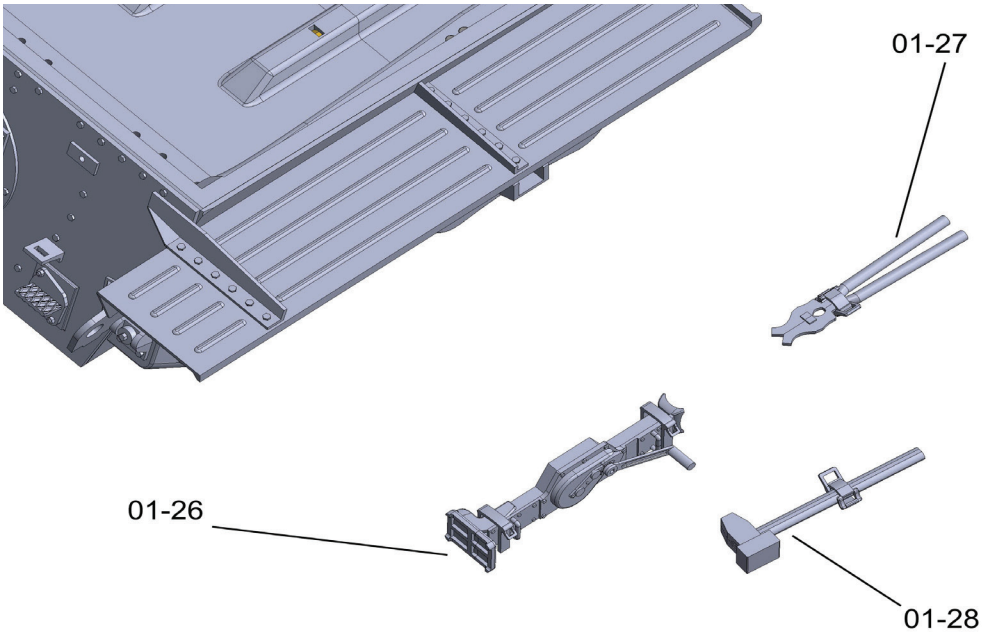

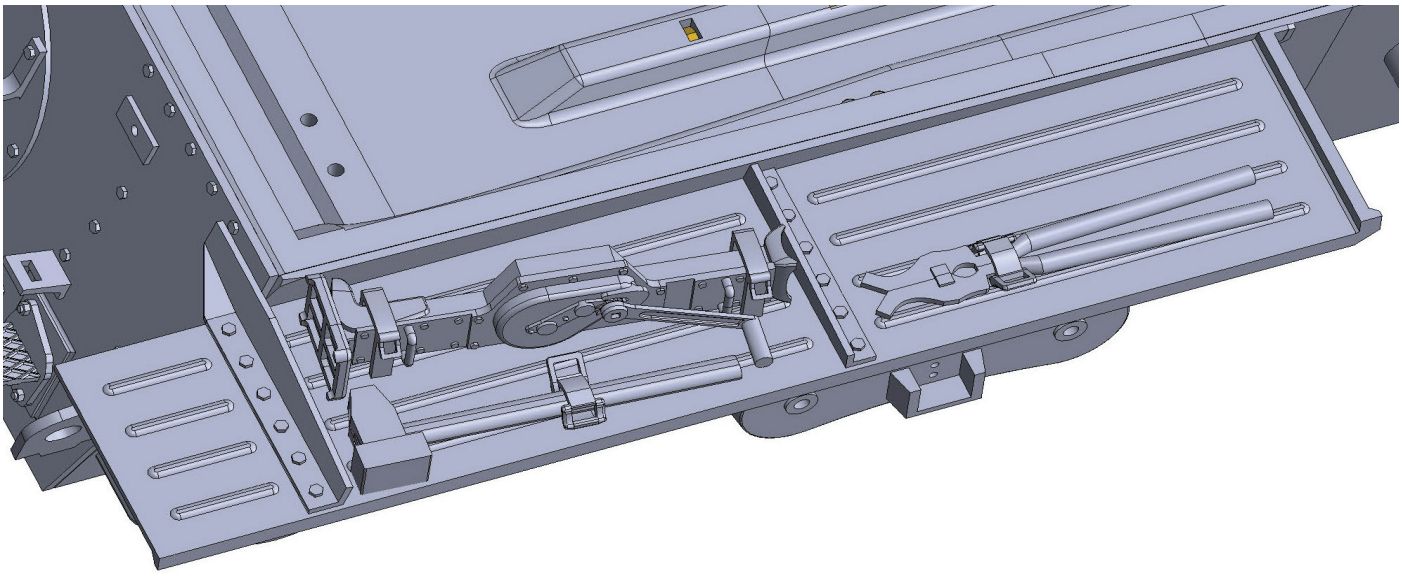

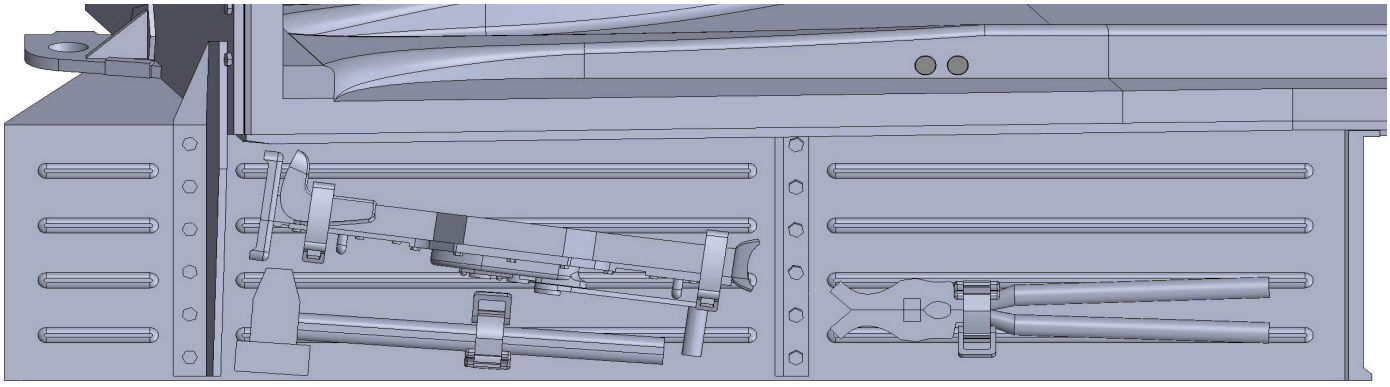

Glue the part wholes of 01-26, 01-27 and 01-28.

Chapter 01 - Lower hull

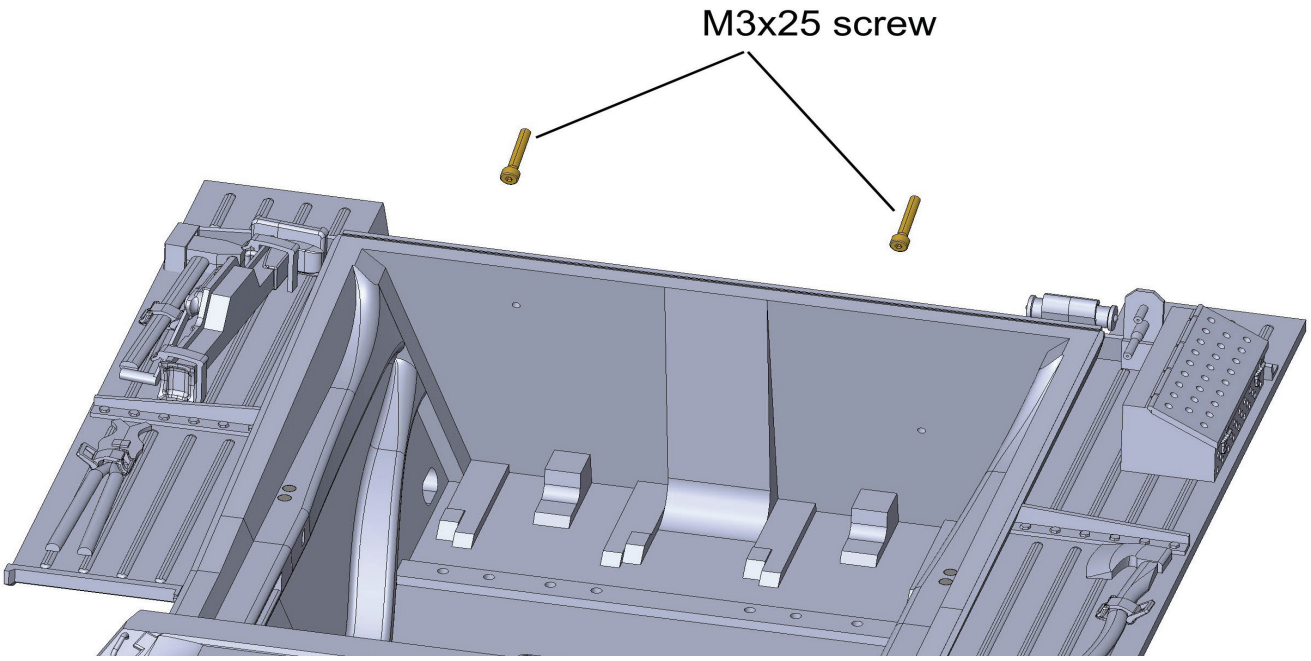

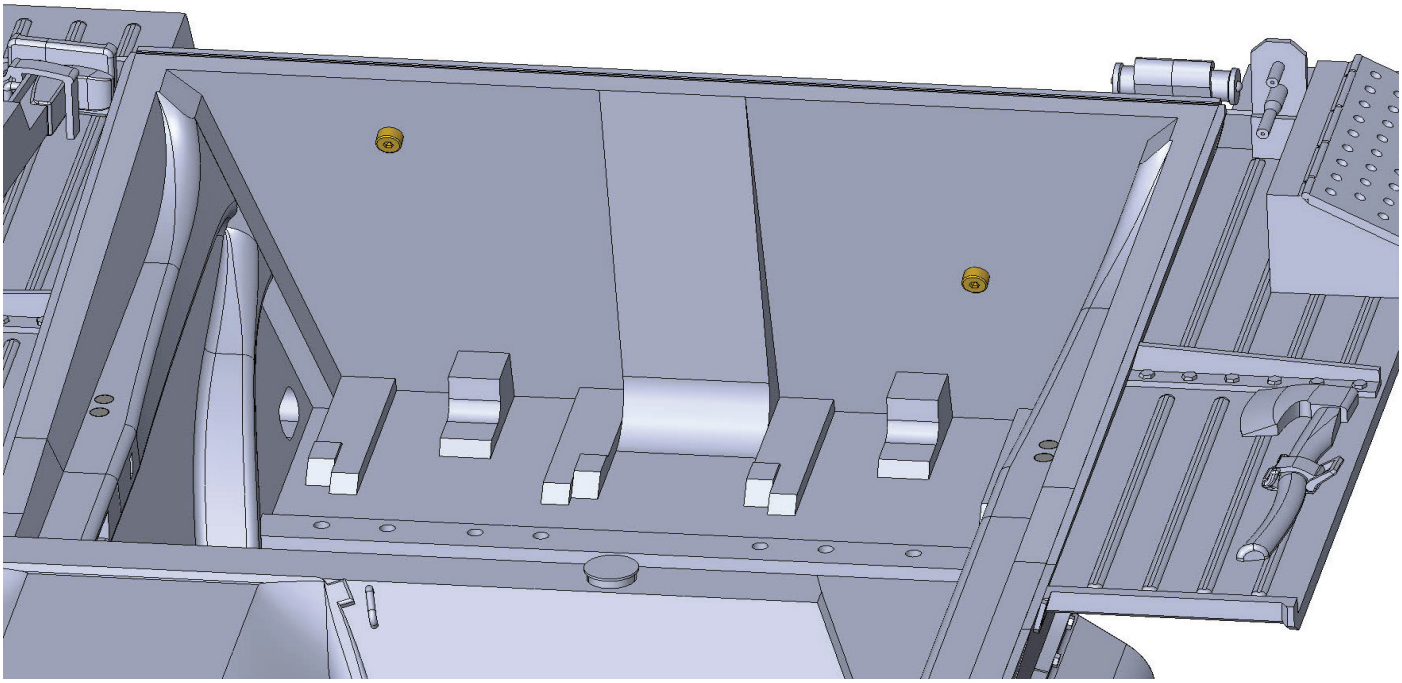

Insert two M3 screws on the rear part into part 01-03.

Chapter 01 - Lower hull

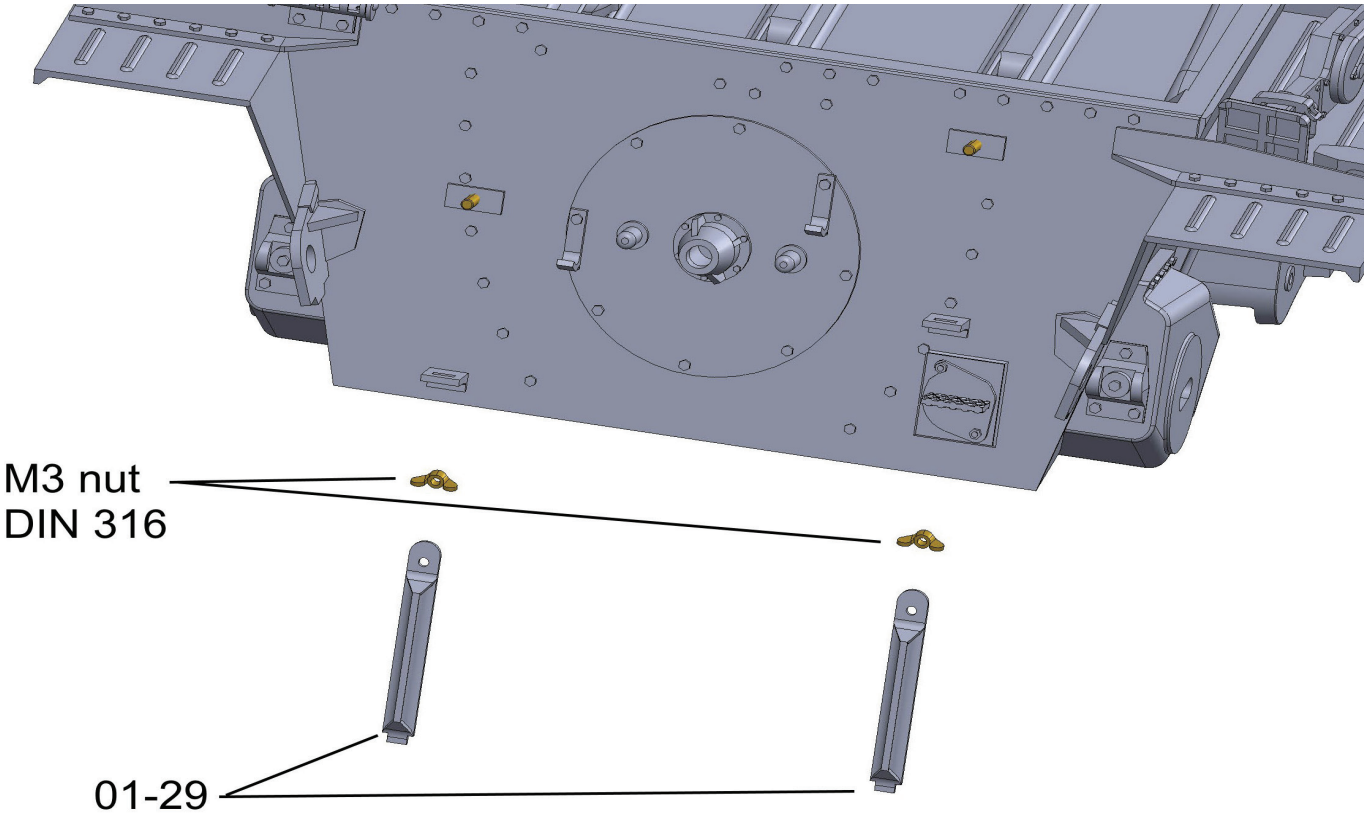

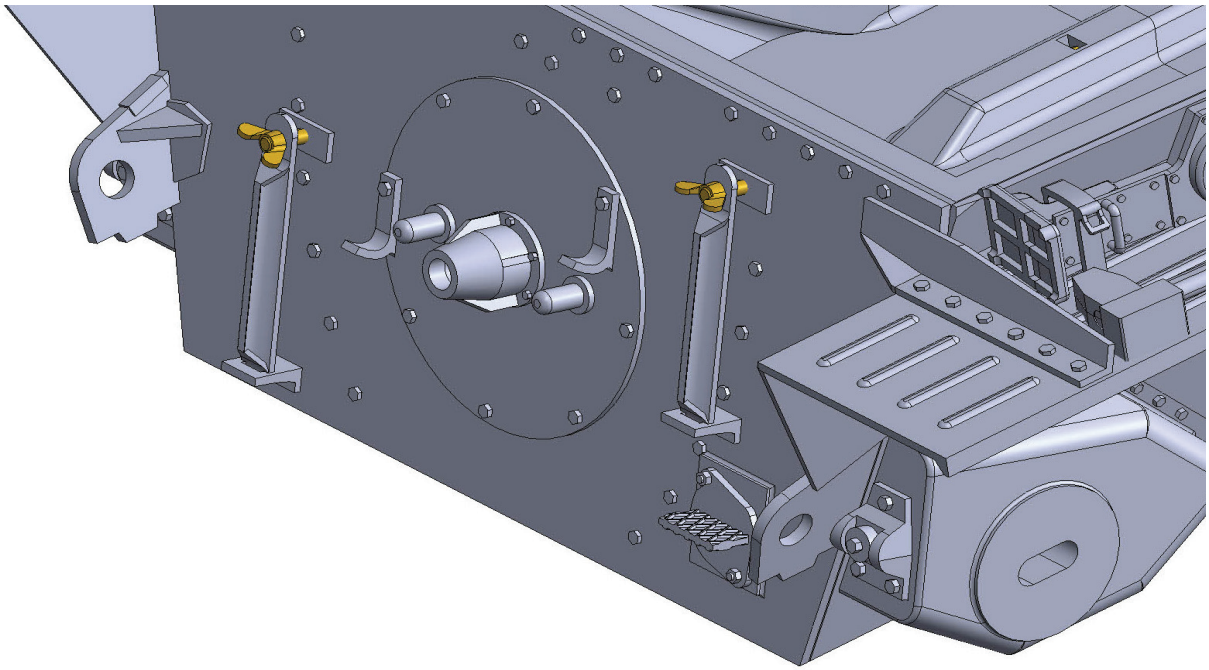

Add parts 01-29. Put them on the screws and secure with nuts M3 DIN 316.
You can add a couple of spare tracks later.
Do not glue the part, otherwise it will lose its functionality.

Chapter 01 - Lower hull

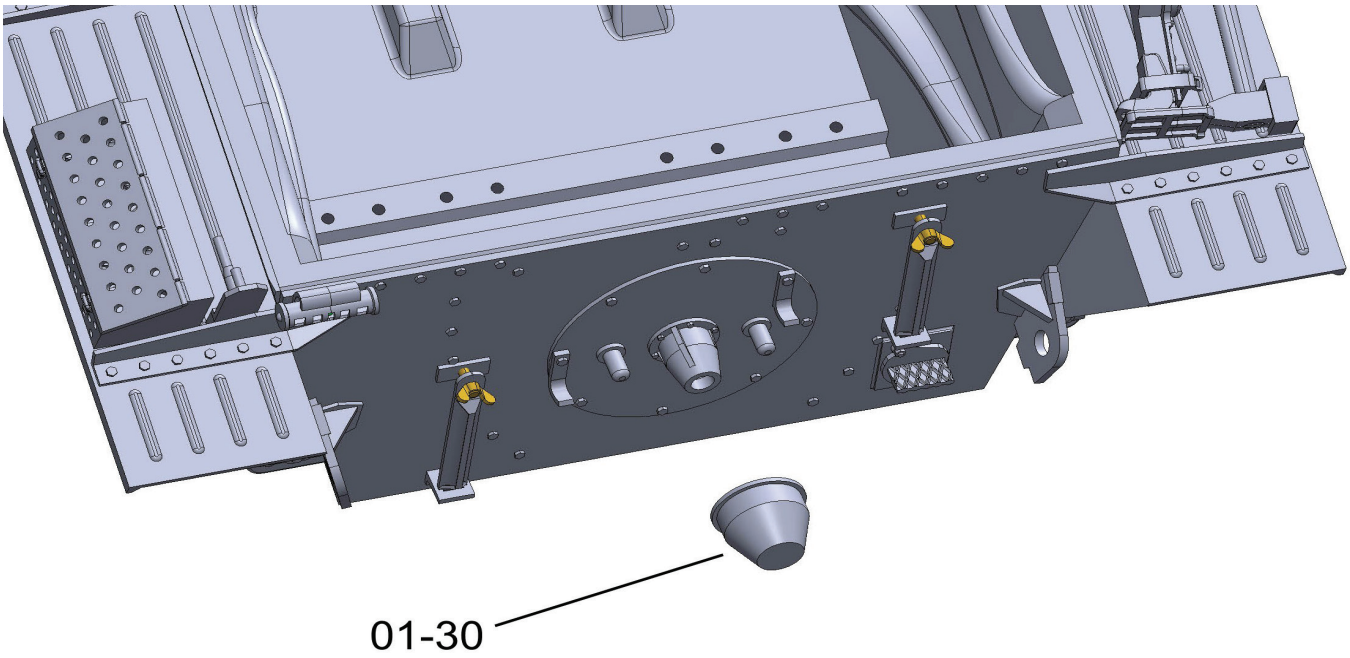

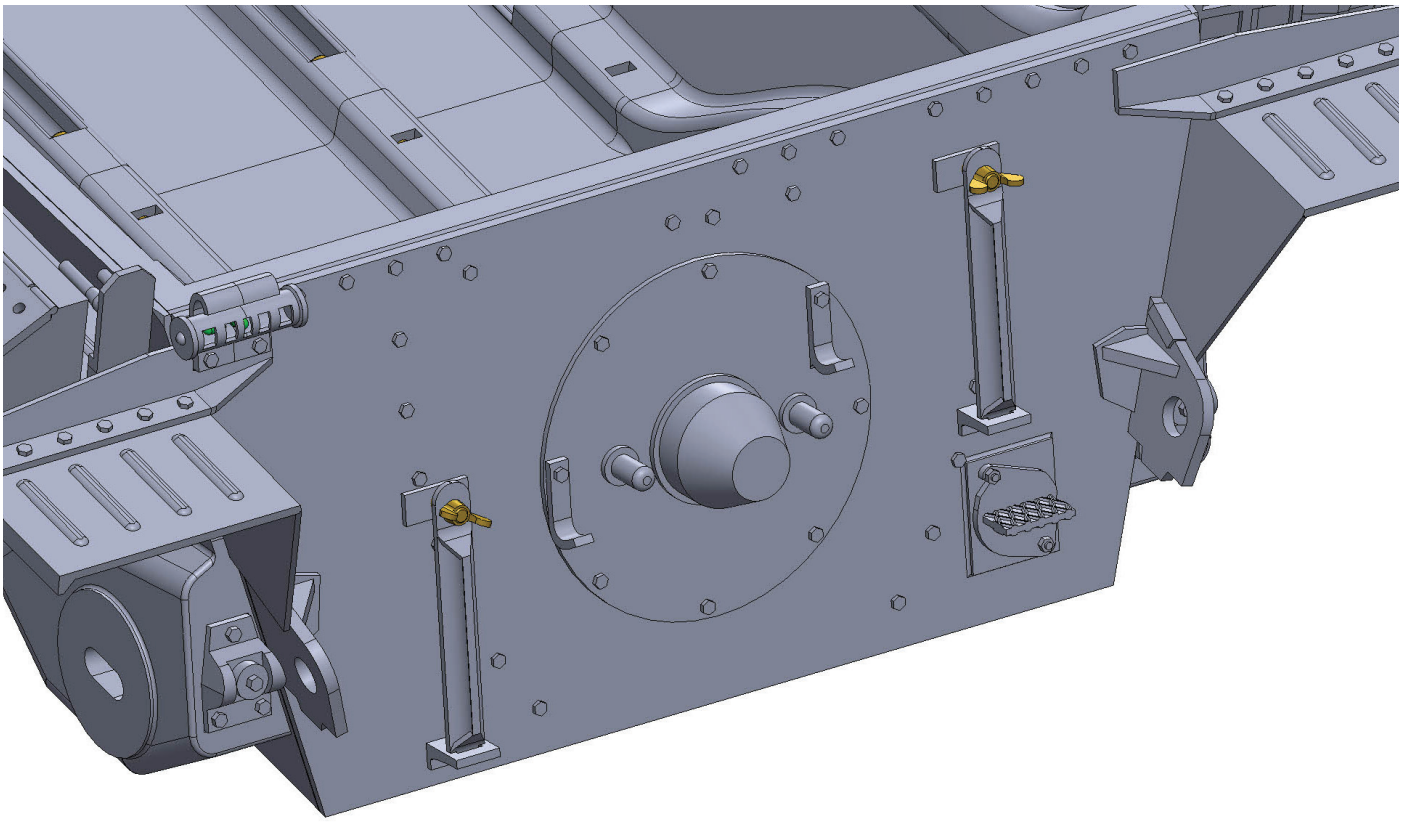

Attach part 01-30.You can glue it but also omit it.

Chapter 01 - Lower hull

2x

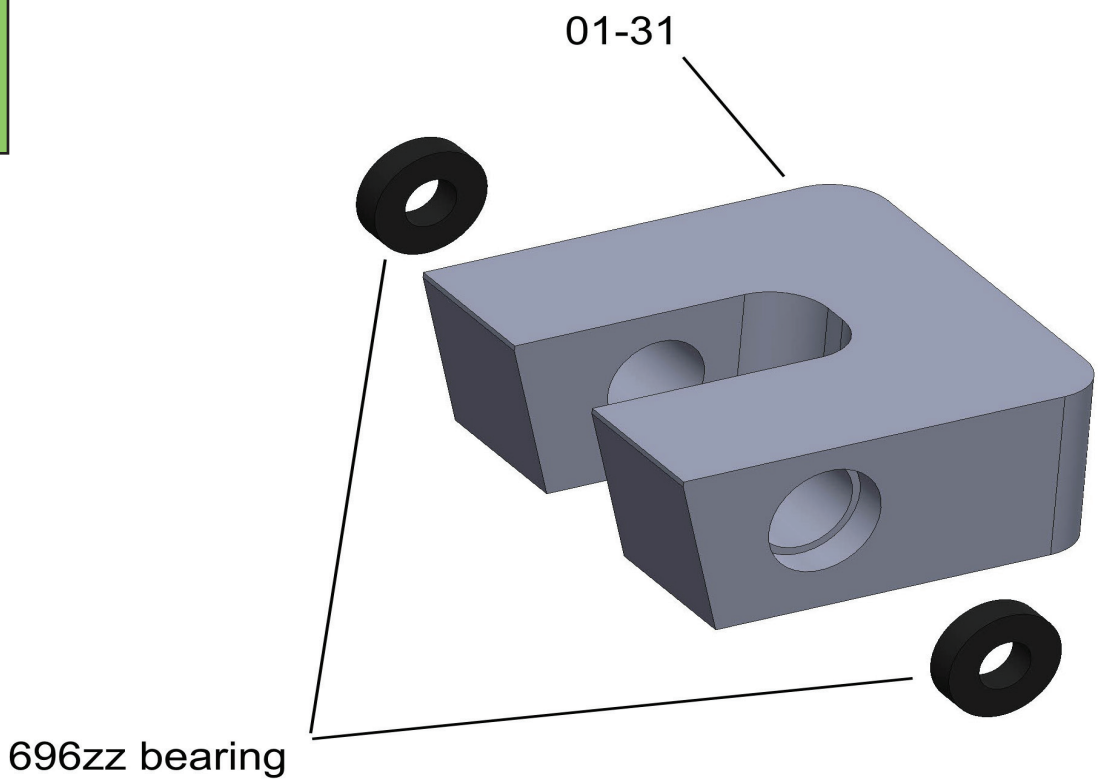

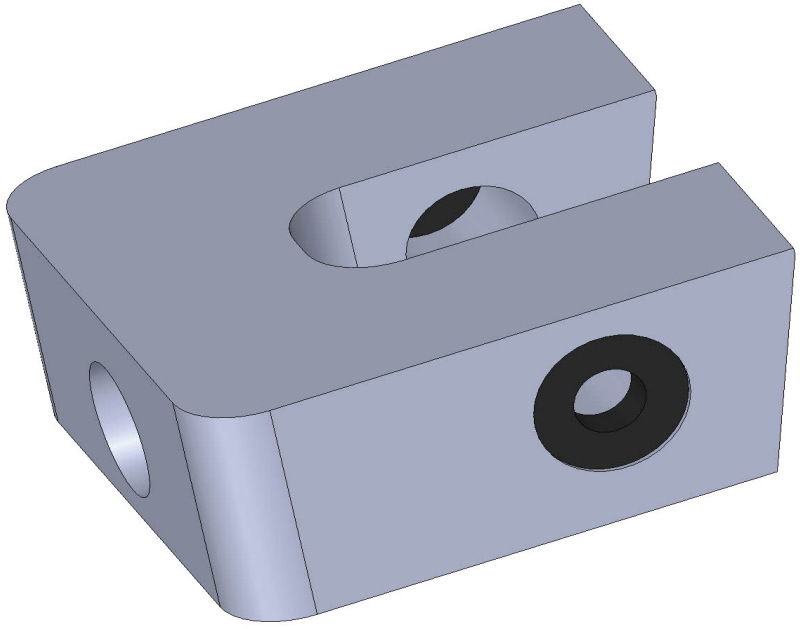

Insert two 696ZZ bearings into part 01-31. You need two parts of 01-31.

Jagdpanzer 38(t)
Assembly guide

Chapter 01 - Lower hull

2x

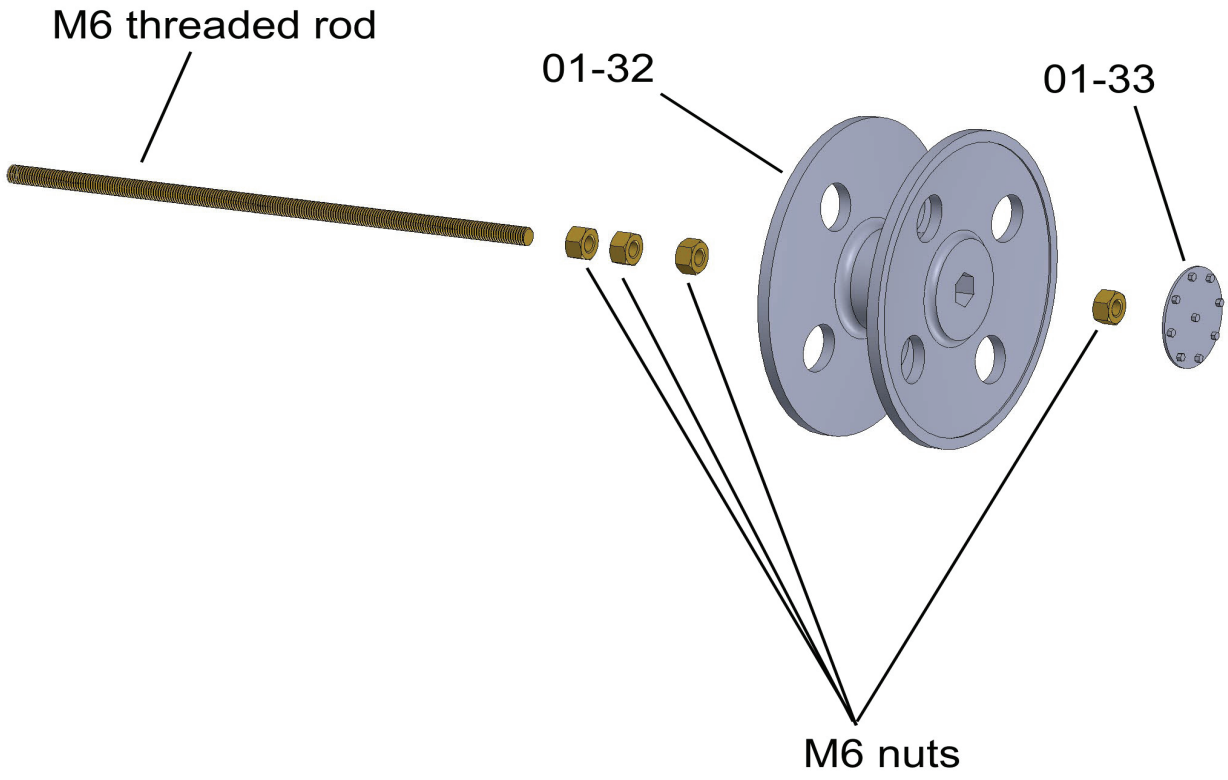

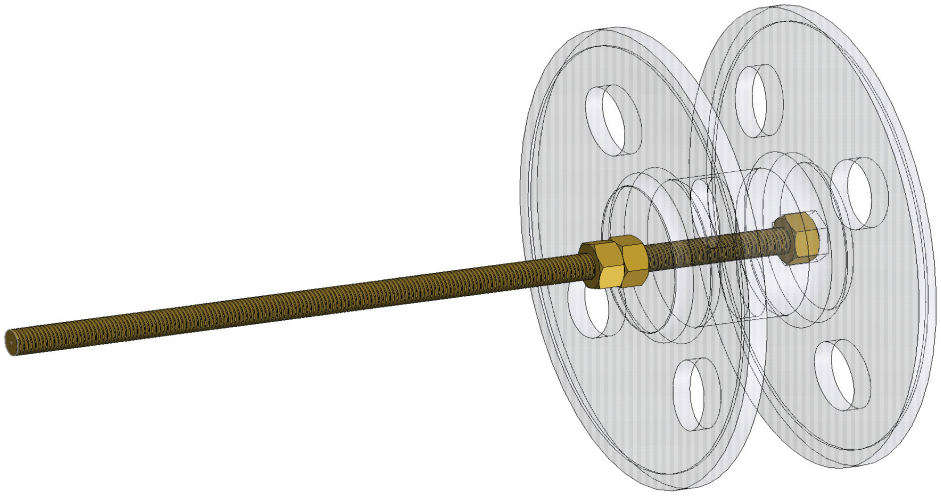

Insert threaded rod M6x175mm into part 01-32.
Secure with M6 nuts.The whole closes with part 01-33.
We recommend gluing part 01-33 at the end of the whole construction.
You need two parts of 01-33.

Chapter 01 - Lower hull

2x

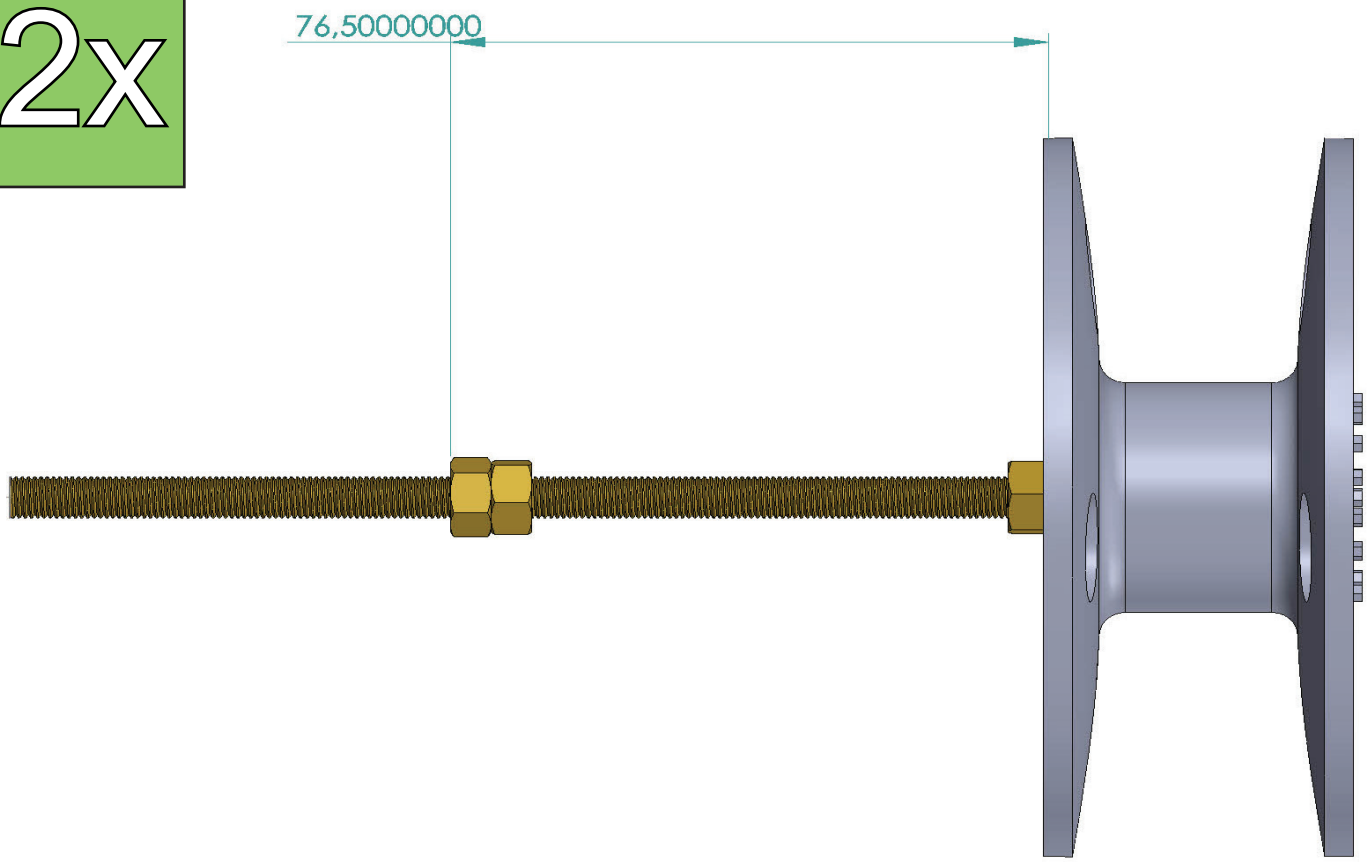

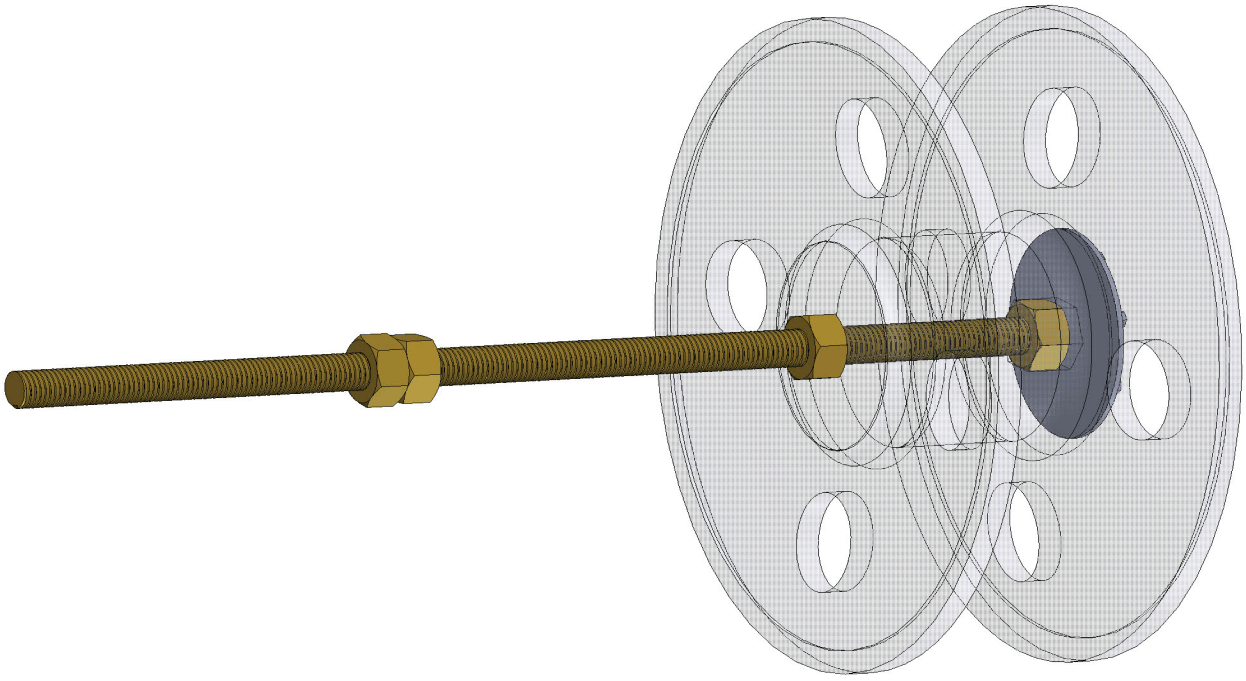

Add two M6 bolts. Maintain a given distance from the wheel (76,5mm).

Chapter 01 - Lower hull

2x

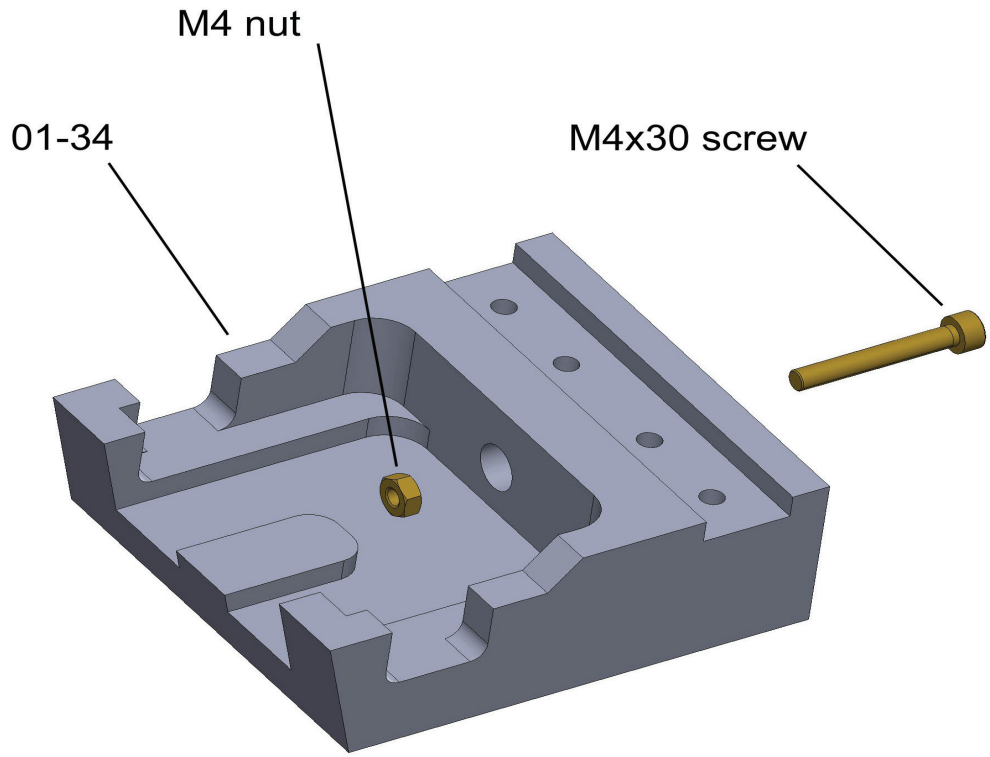

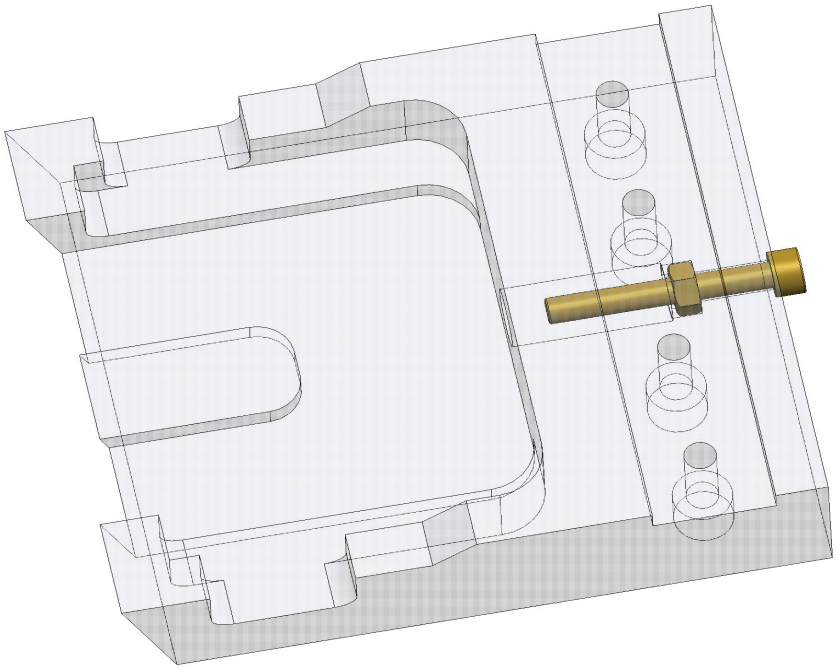

Insert M4x30 screw into part 01-34.
Secure with M3 nut.
You need two parts of 01-34.

Chapter 01 - Lower hull

2x

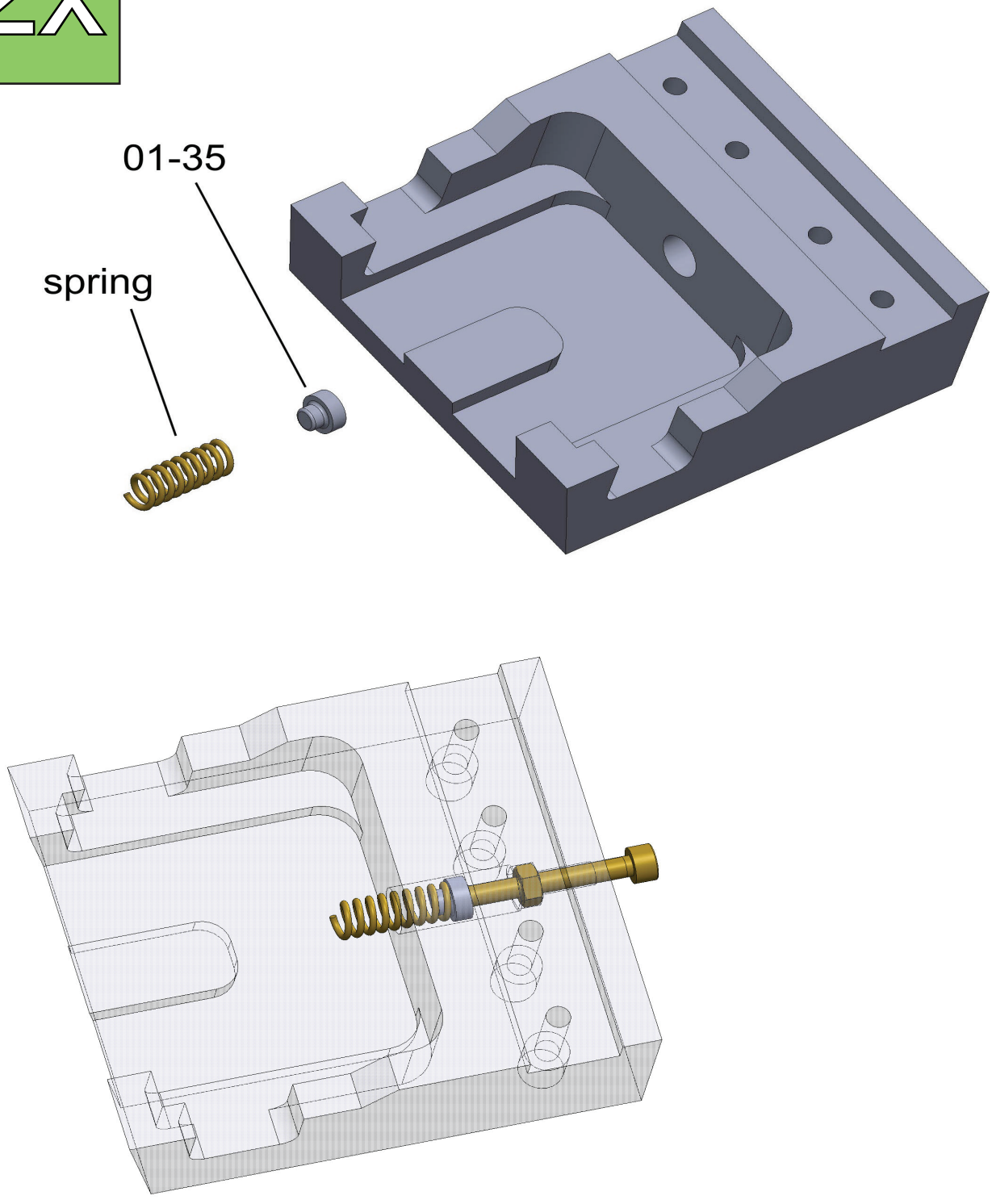

Insert part 01-35 and spring of 7mm diameter and 22mm length.
The unit must move freely in the cavity.

Chapter 01 - Lower hull

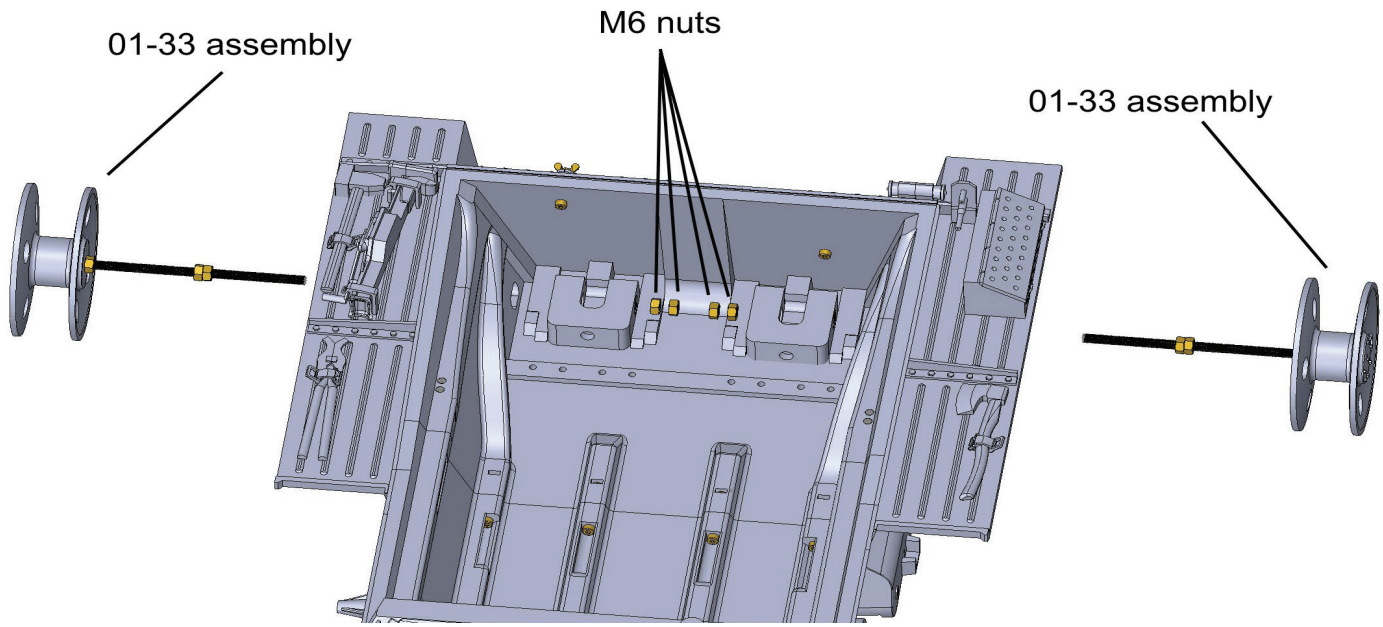

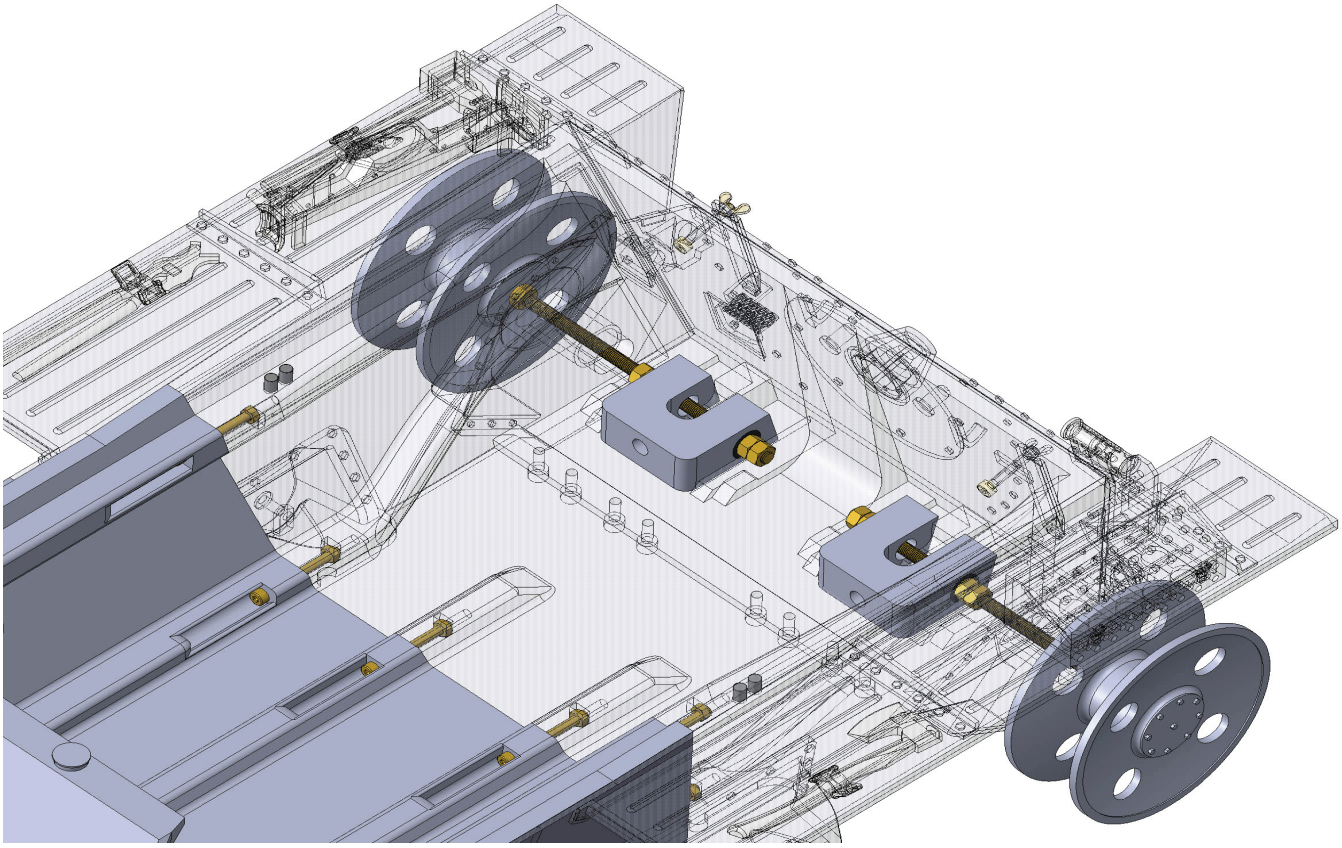

Insert the prepared subassemblies 01-31.
Then insert the subassemblies 01-34 and secure each one with two nuts.
The wheel screws must be tight. If loose, there is a risk of damage to the model!!!

Chapter 01 - Lower hull

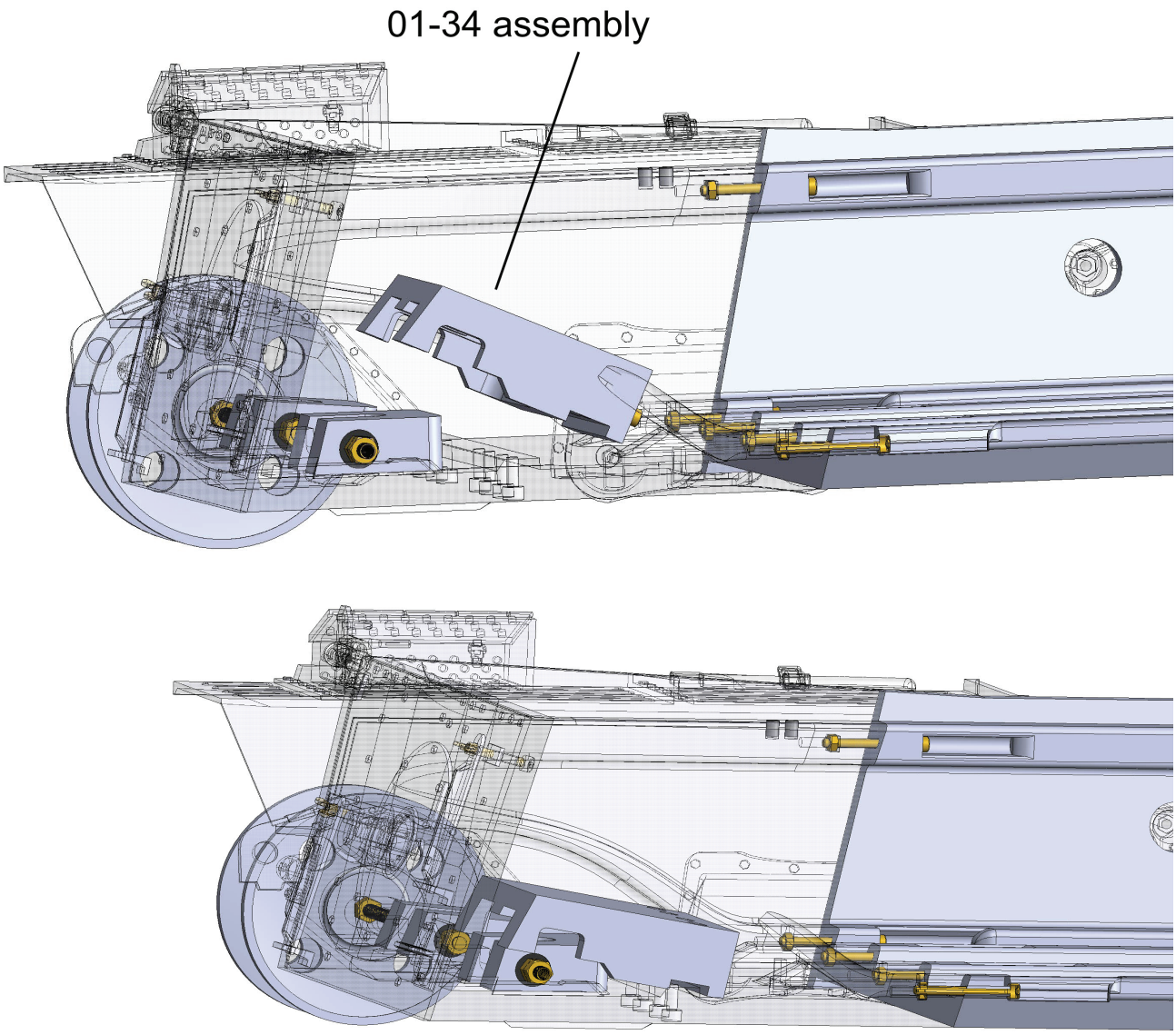

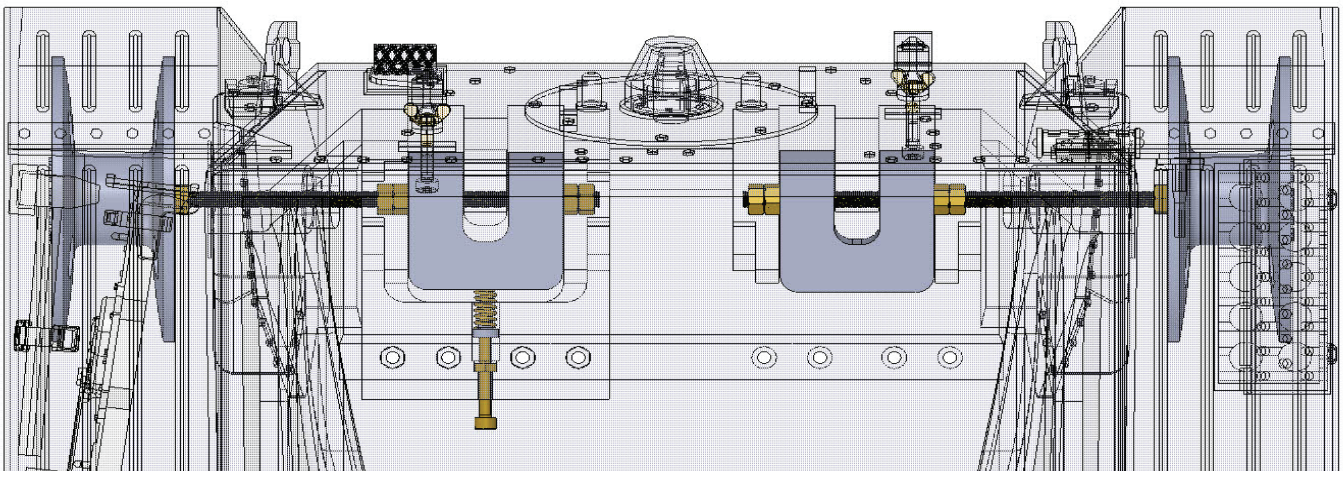

Insertion detail of assembly 01-34.

Chapter 01 - Lower hull

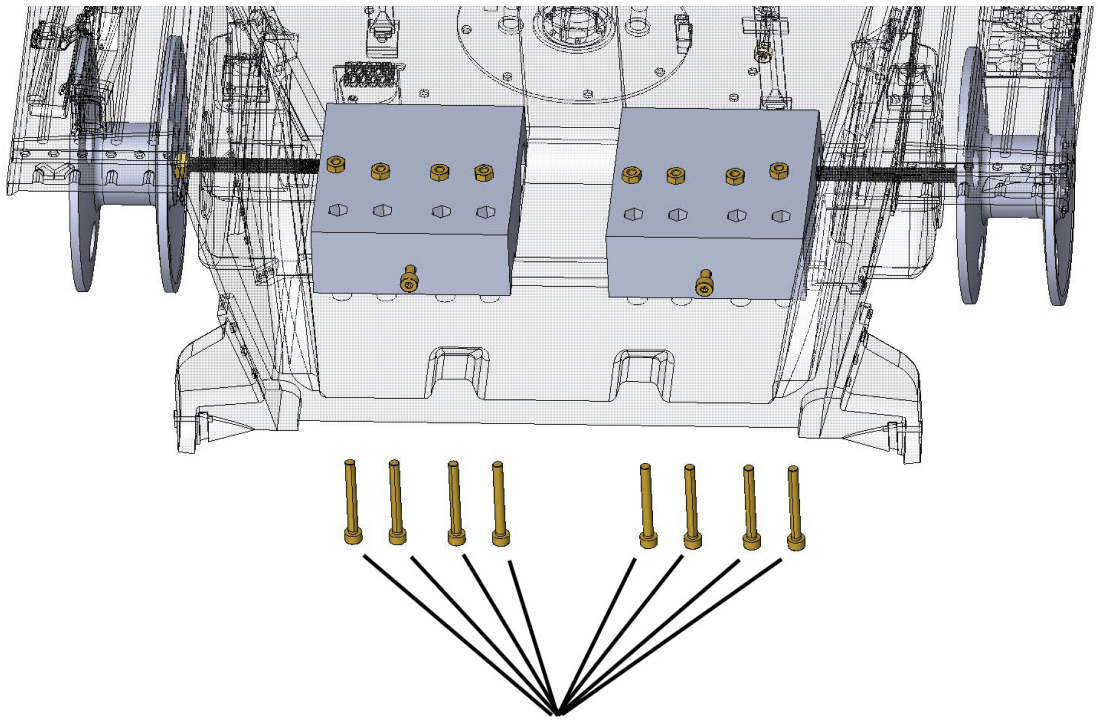

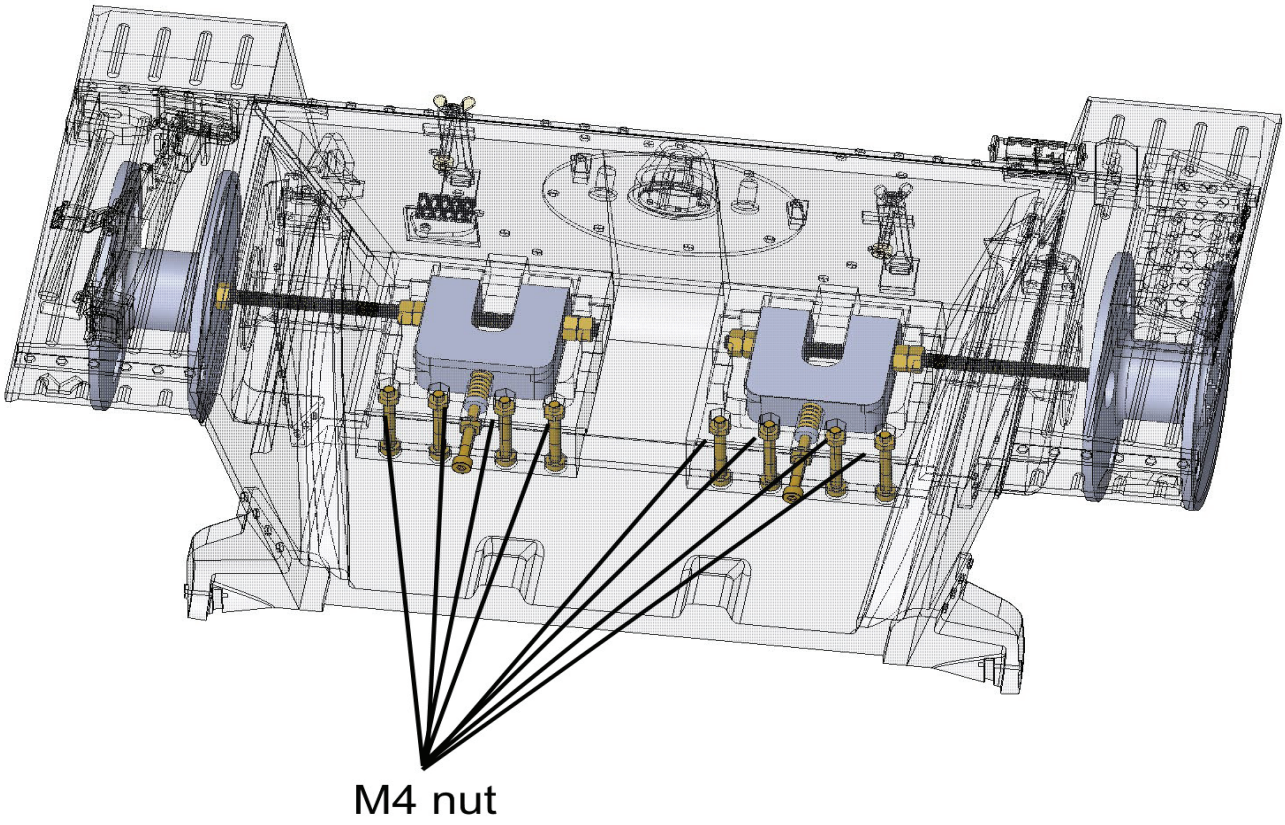

Finally, secure the whole units with M4x35 screws and M4 nuts.

Chapter 01 - Lower hull

2x

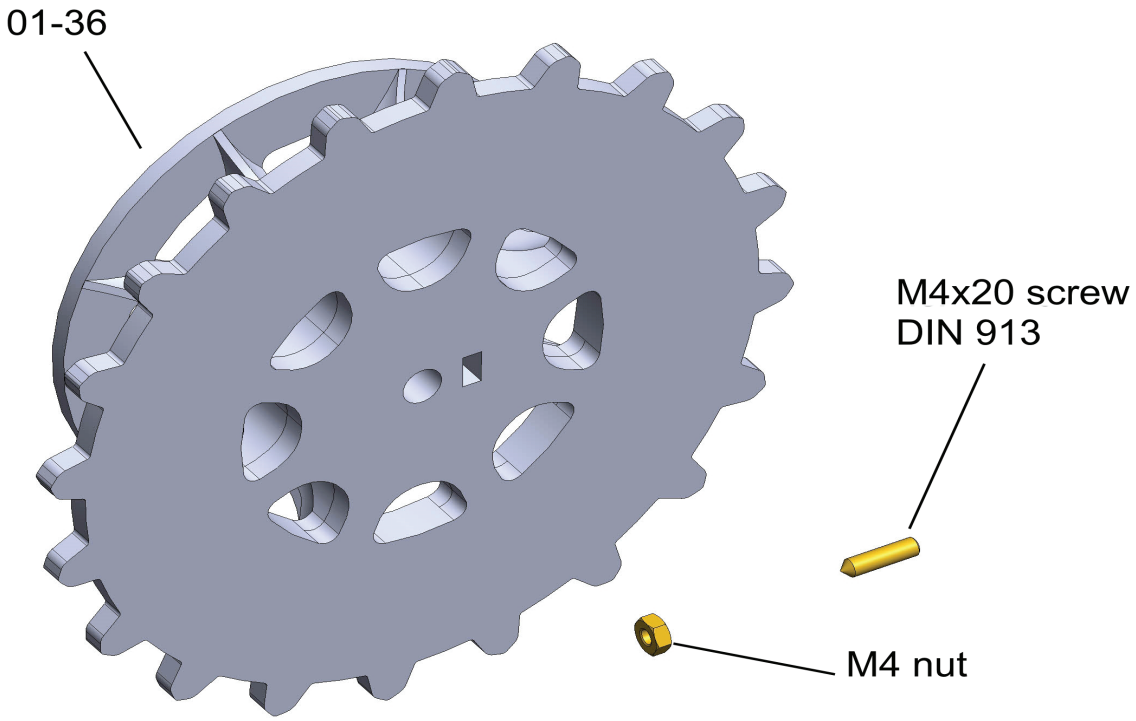

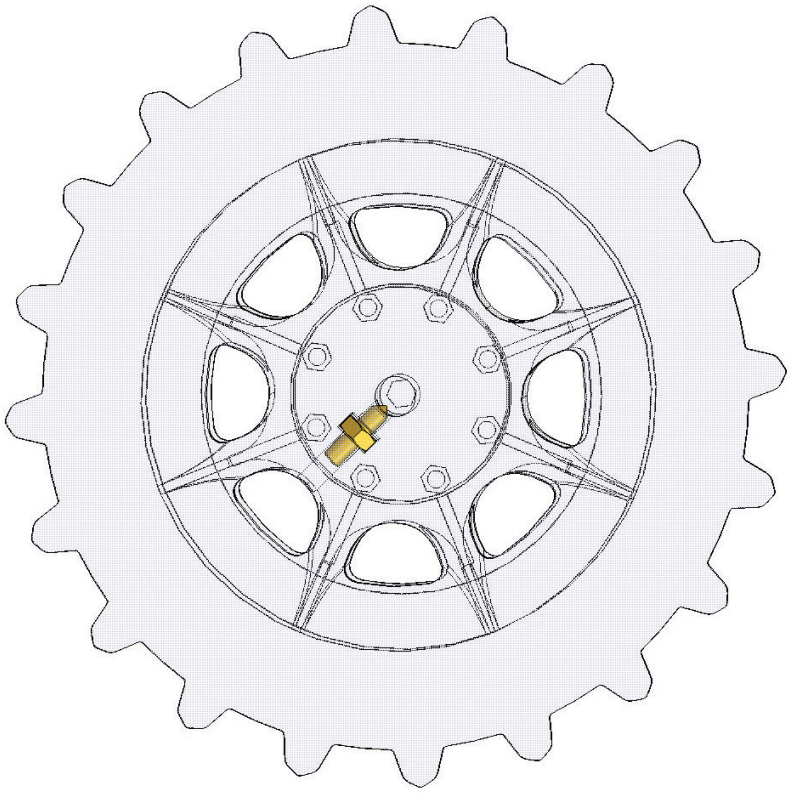

Insert M4x20 screw (worm - DIN 913) and M4 nut into part 01-36.

Chapter 01 - Lower hull

2x

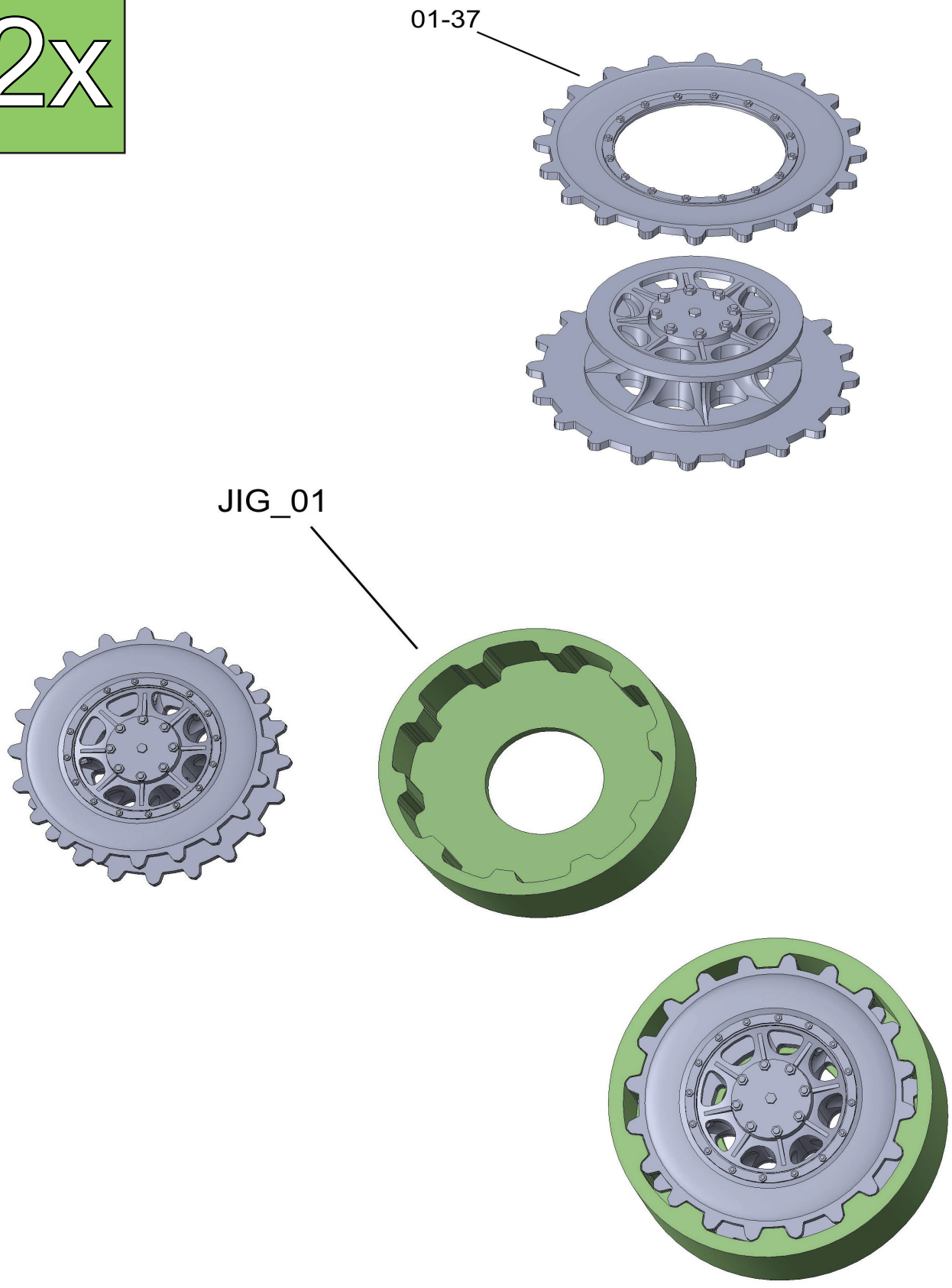

Glue parts 01-36 and 01-37 together. Use JIG_01 for precise bonding.

Chapter 01 - Lower hull

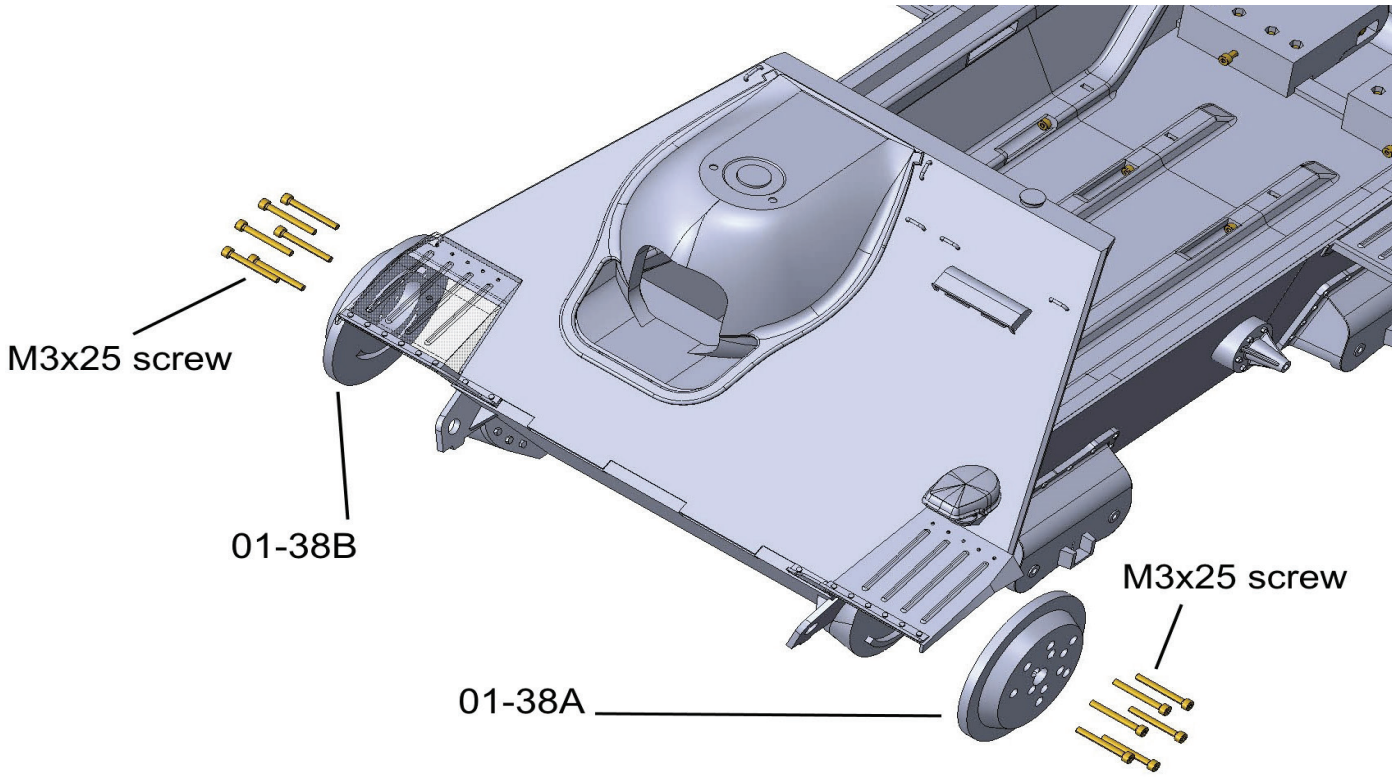

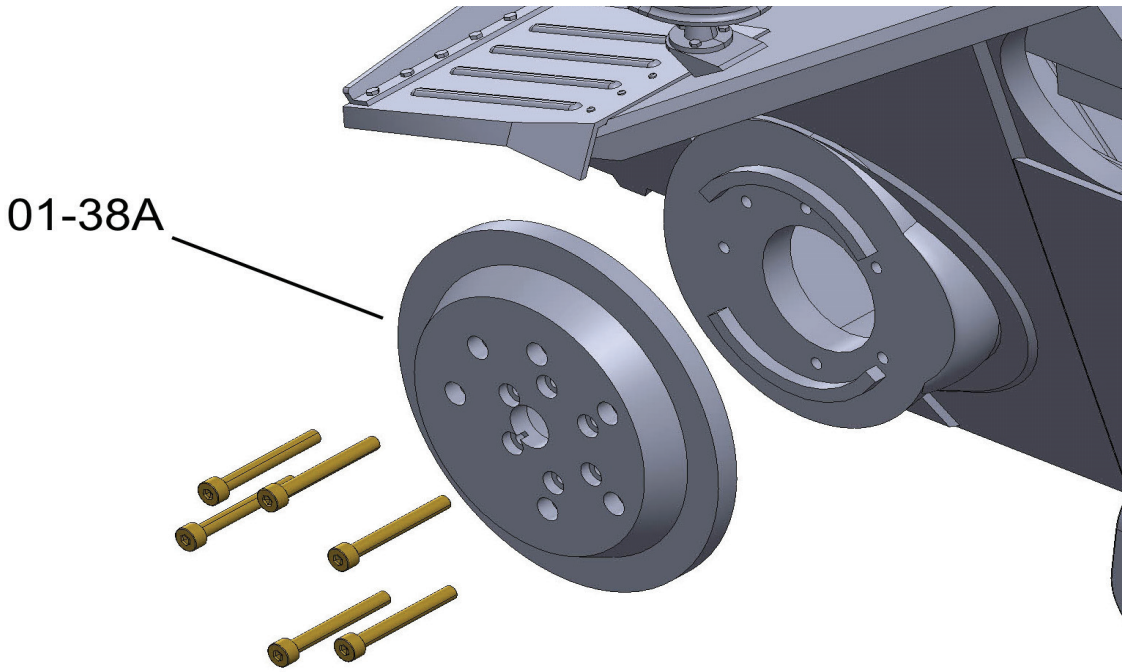

Attach parts 01-38A and 01-38A to part 01-01 using an M3x25 screws.

Chapter 01 - Lower hull

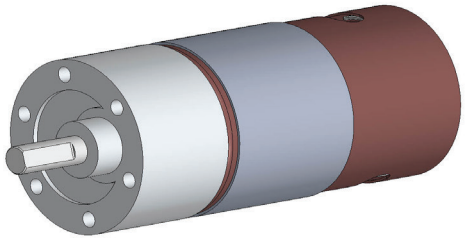

JGB37-550 - 260RPM

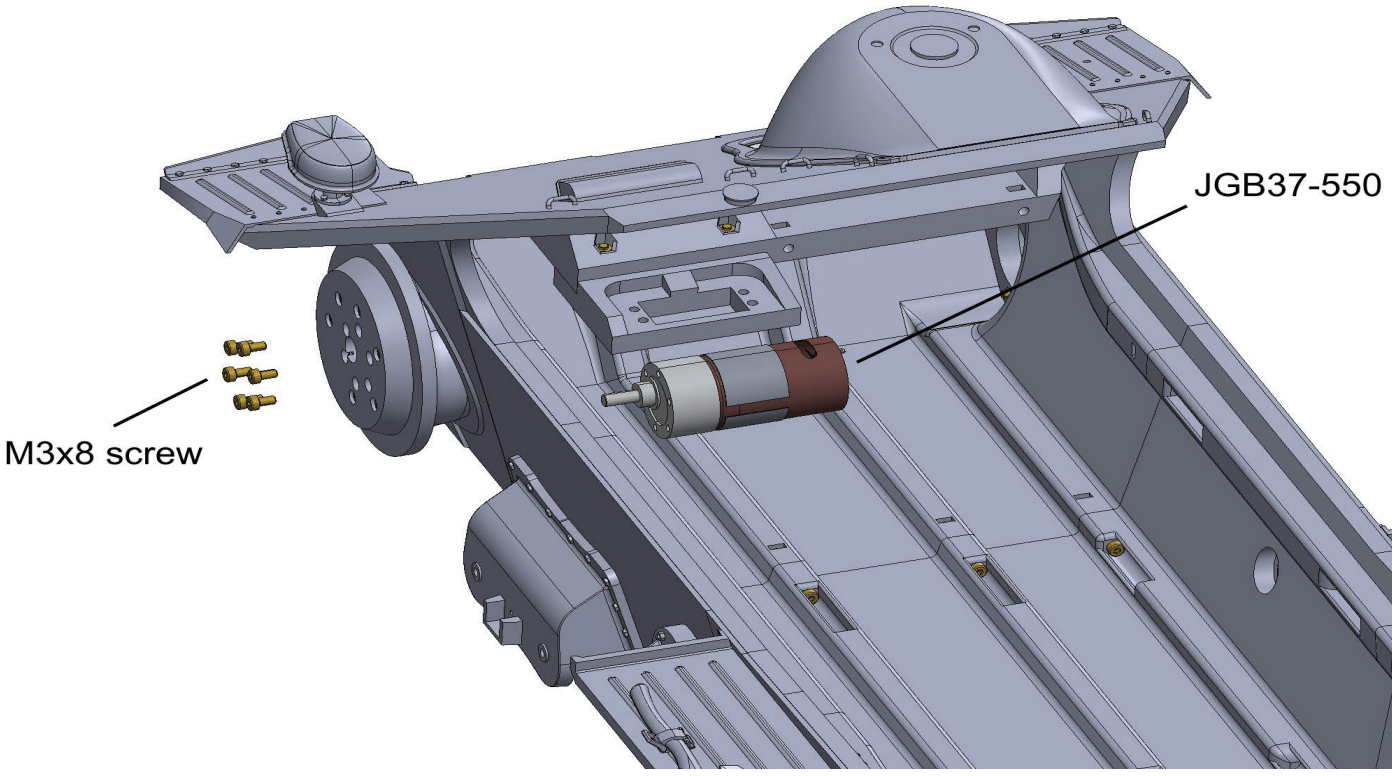

Attach JGB37-550 motor to part 01-38 using an M3x8 screws.

Chapter 01 - Lower hull

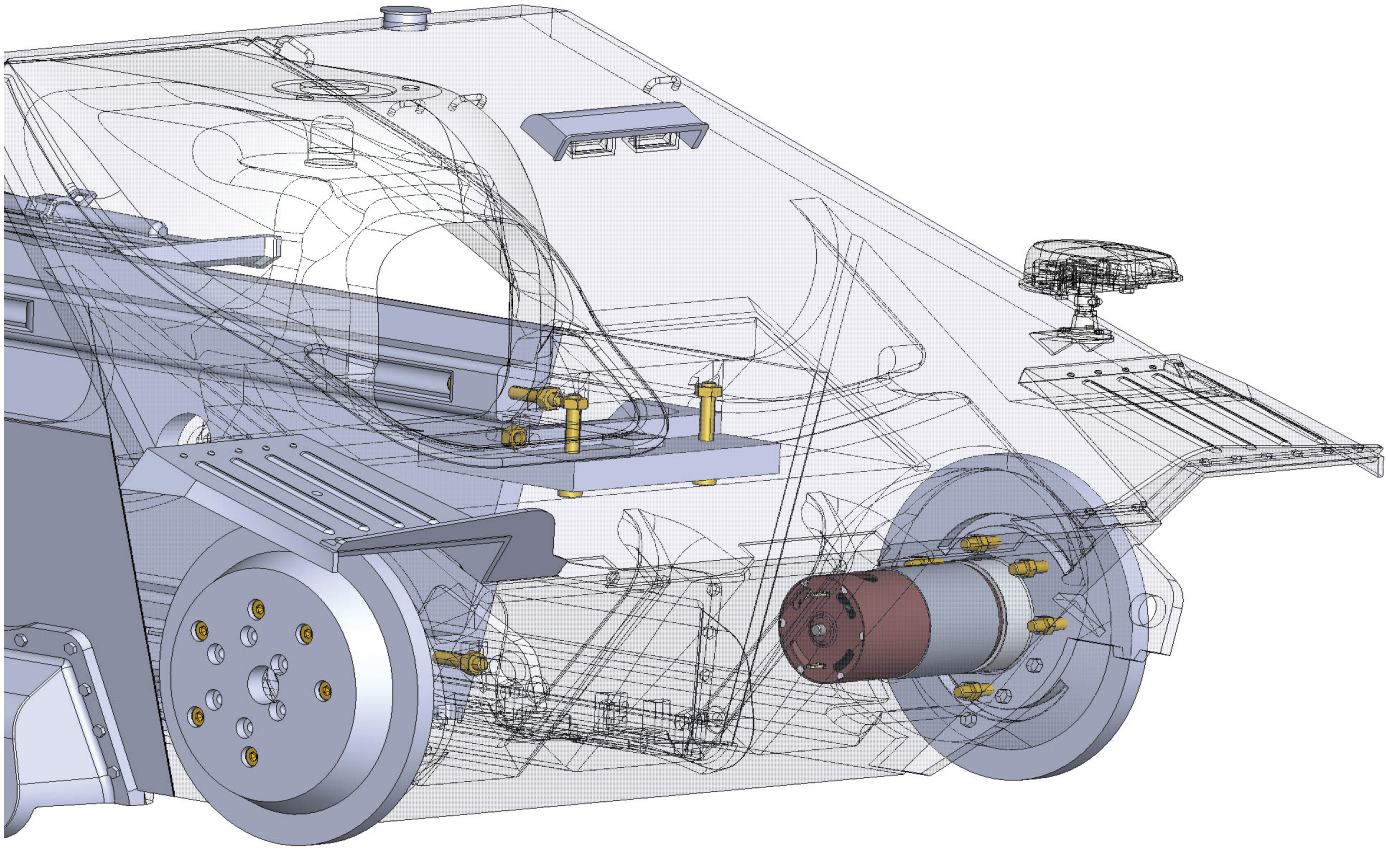

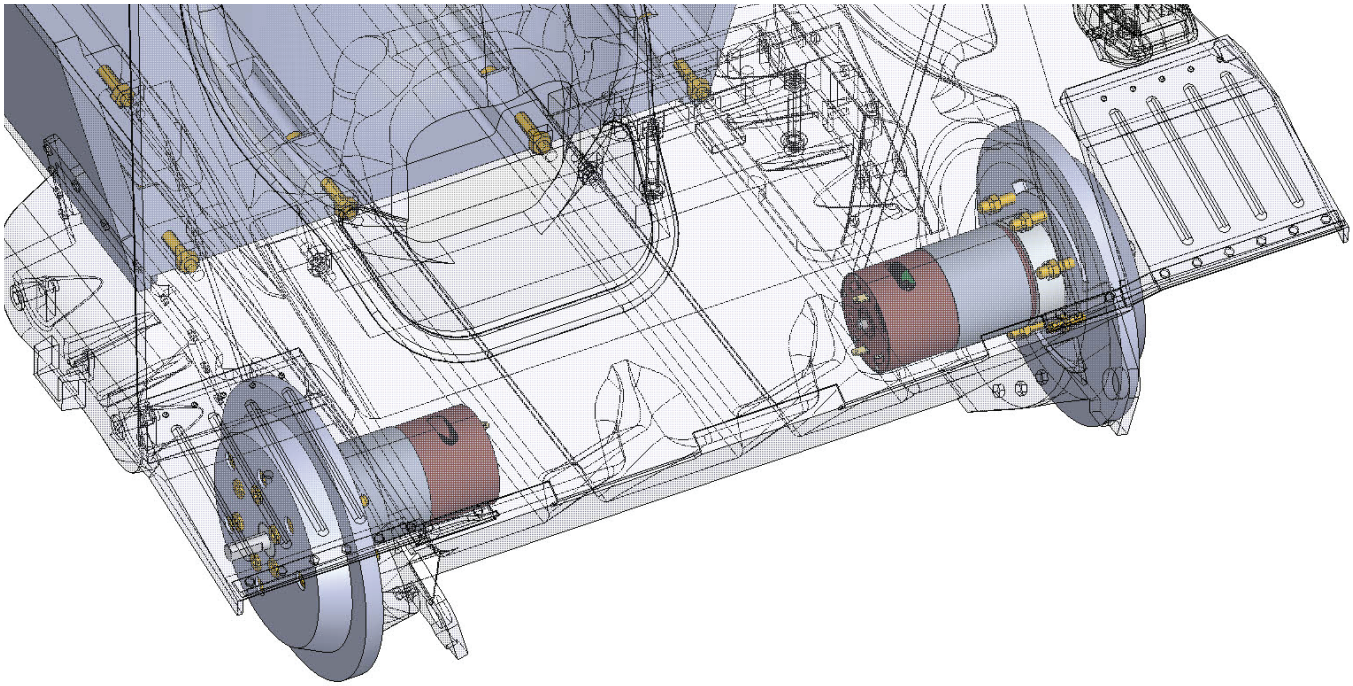

Install the right side of the drive, the procedure is the same as on the left.

Chapter 01 - Lower hull

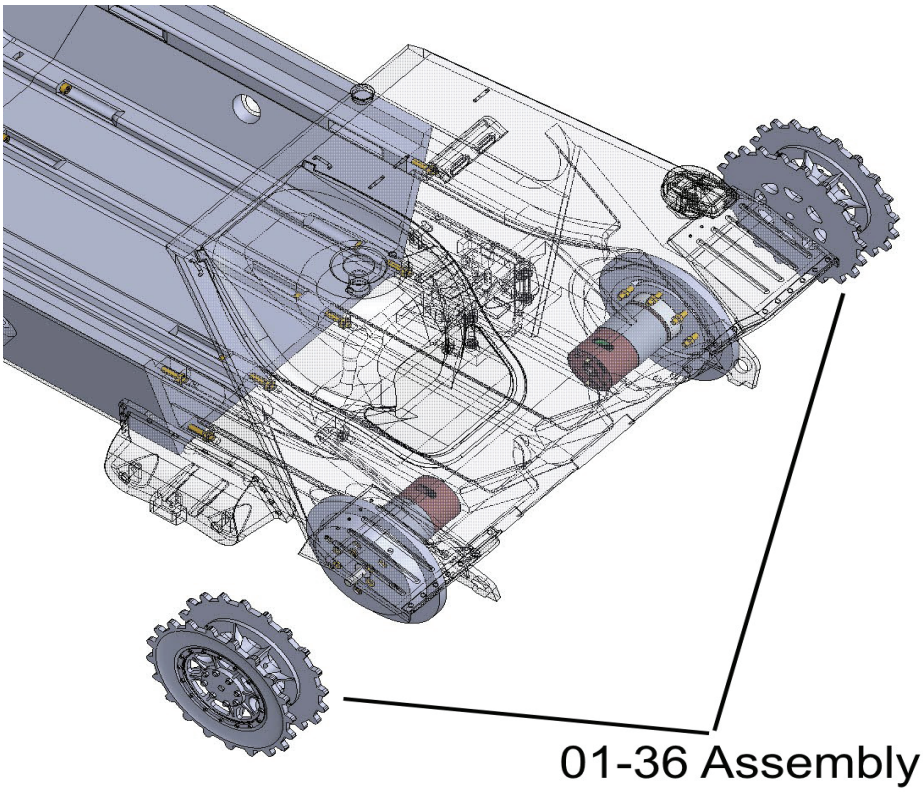

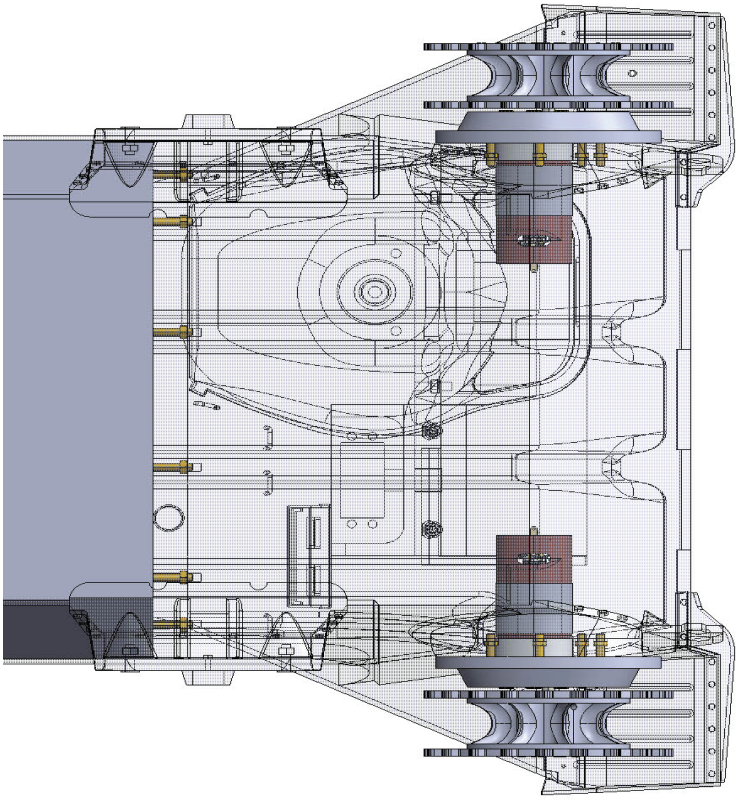

Then insert the subassemblies 01-36 and secure each one with DIN 913 screw.

Chapter 01 - Lower hull

8x

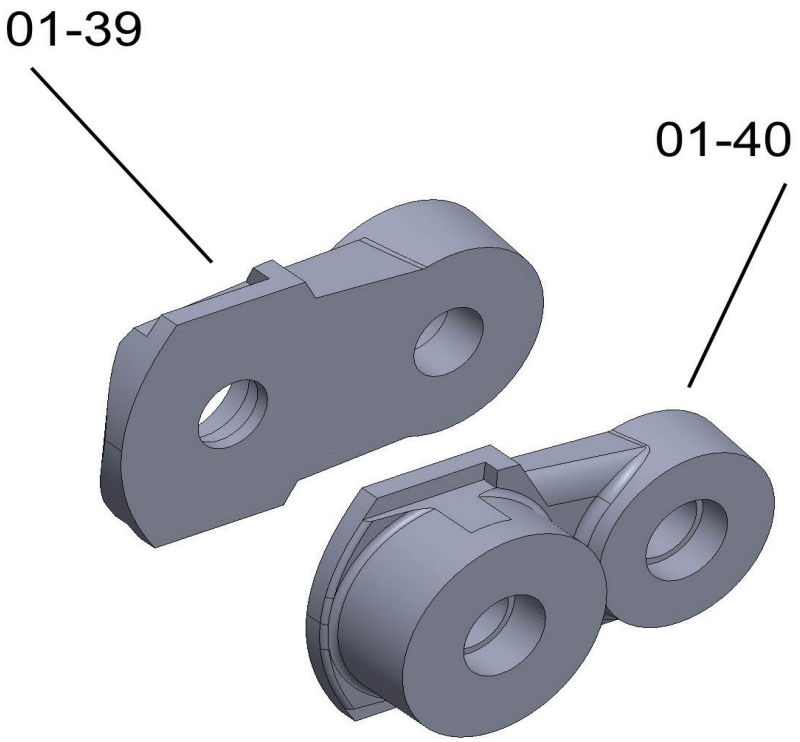

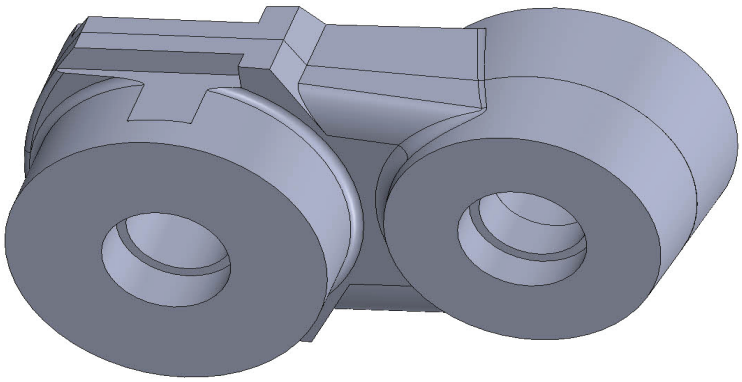

Bond parts 01-41 and 01-42.

Chapter 01 - Lower hull

4x

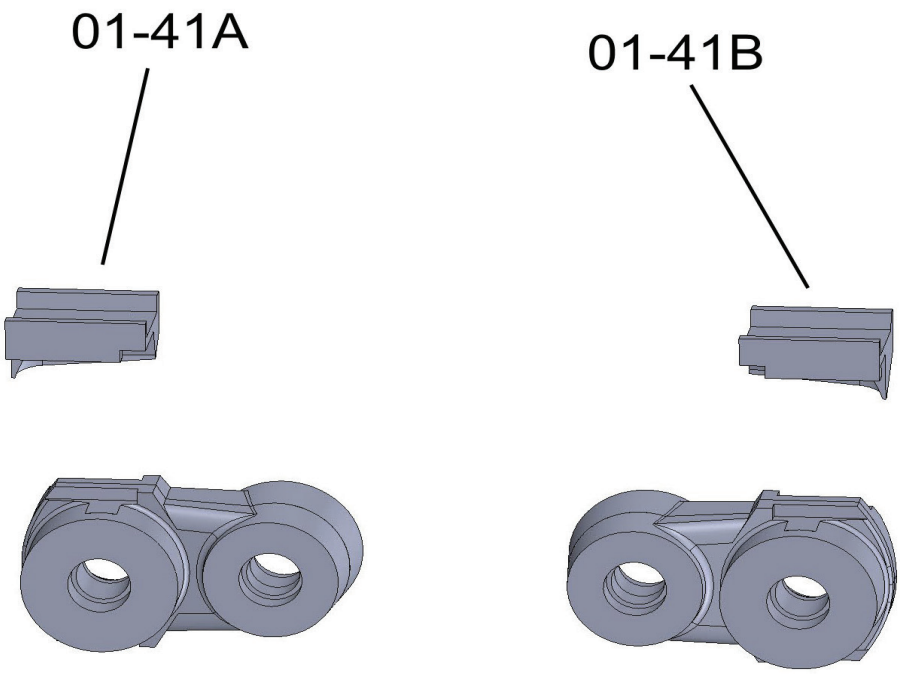

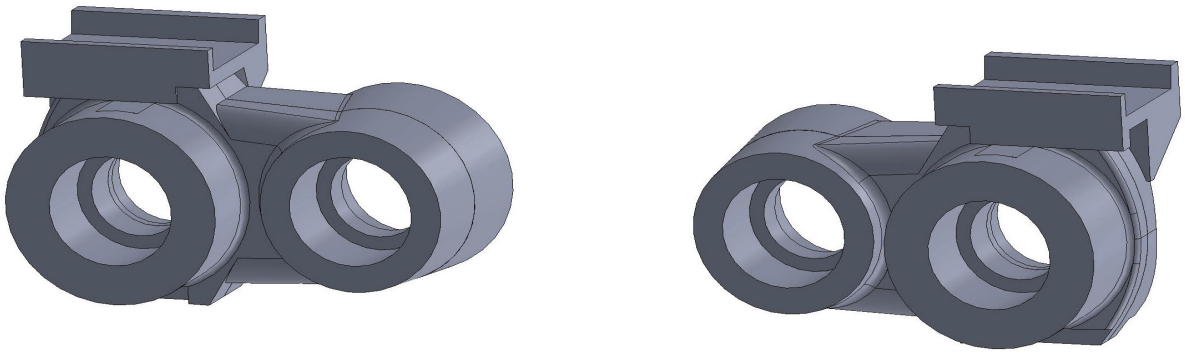

Glue part 01-43A on the four subassemblies 01-41.
Glue part 01-43B on the other four.

Chapter 01 - Lower hull

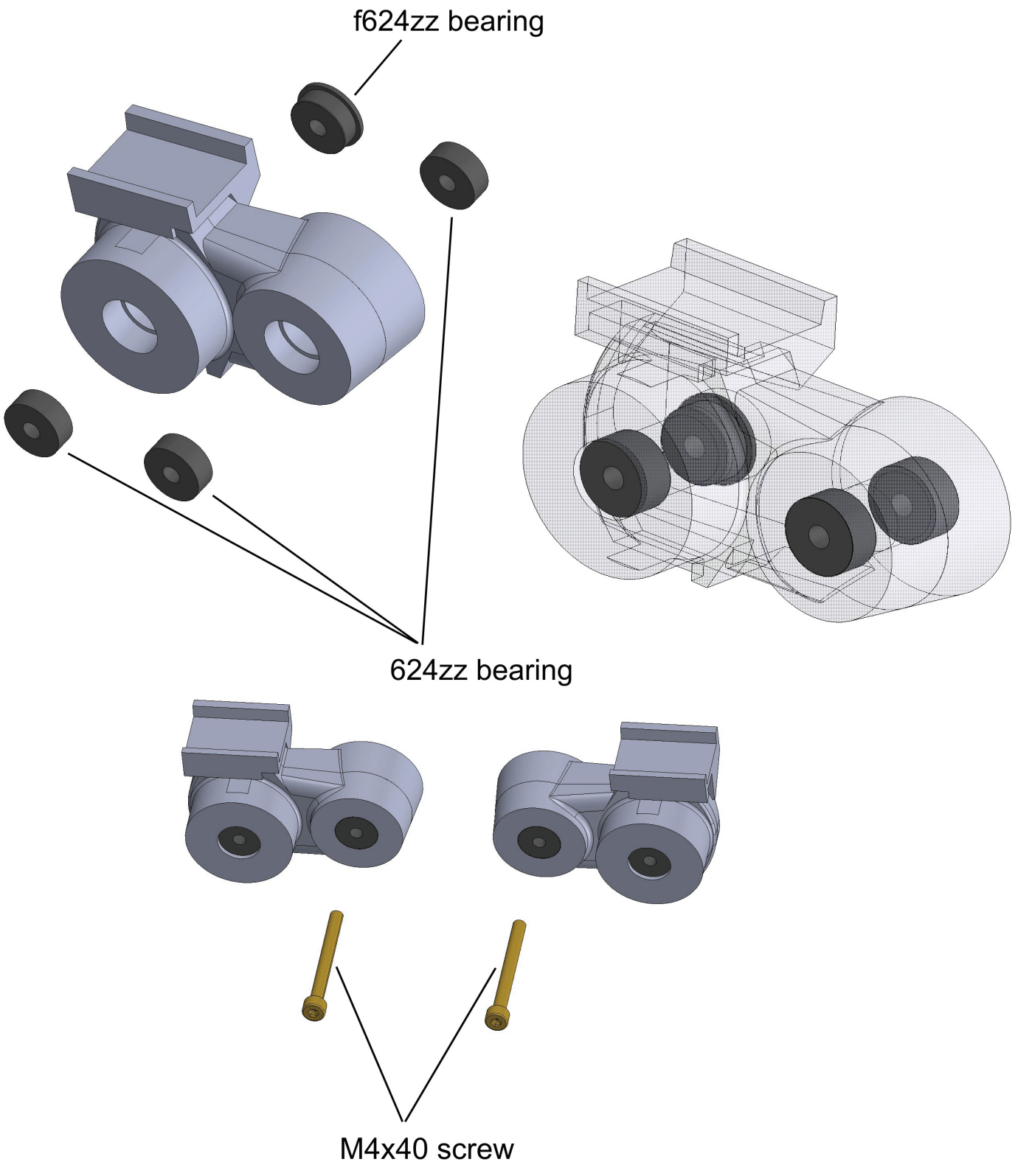

Insert three 624zz bearings and one f624zz bearing into each subassembly 01-39.
Insert an M4x40 screw into each subassembly.

Chapter 01 - Lower hull

8x

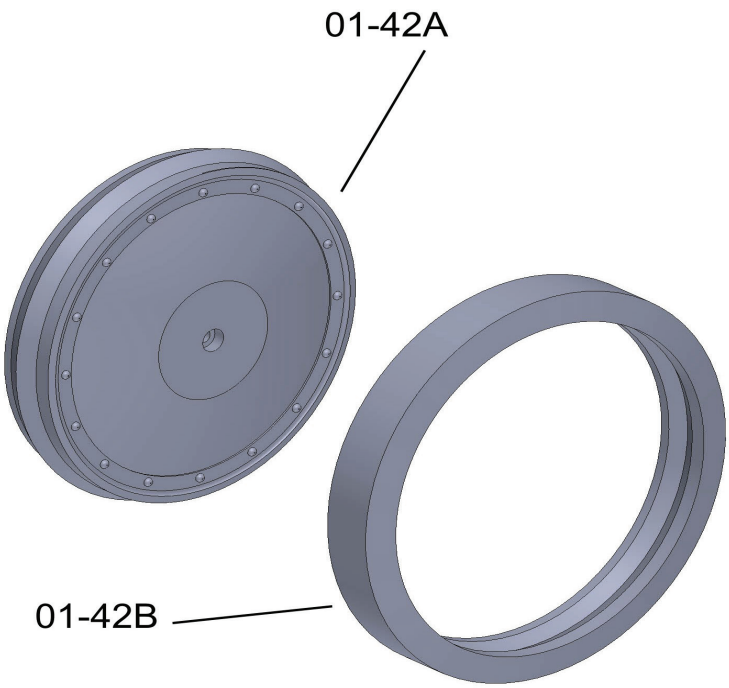

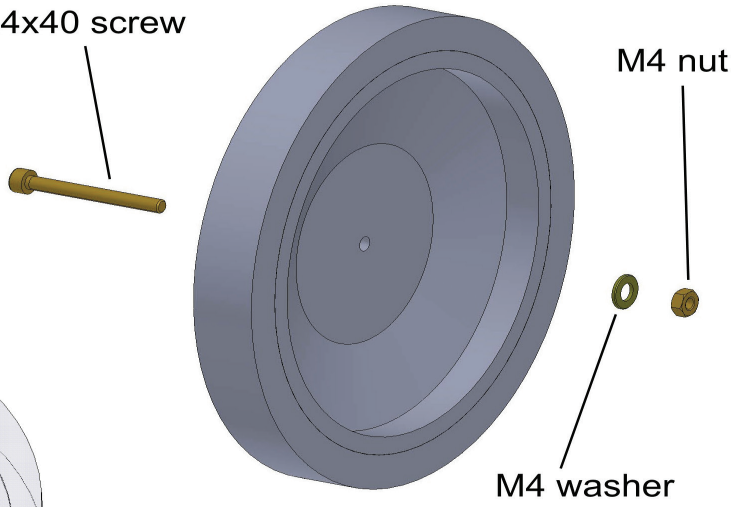

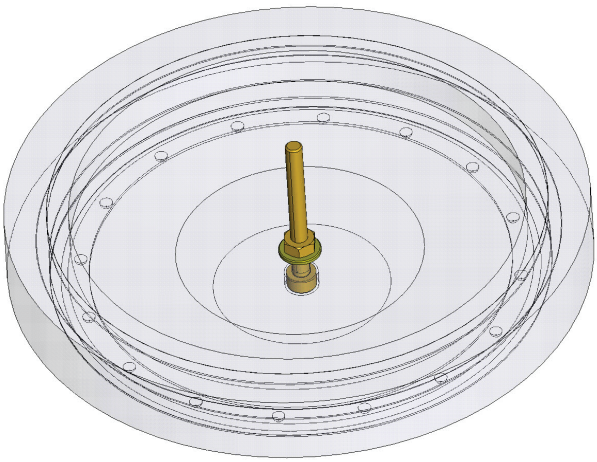

Thread the 01-42B flex-extruded part onto the 01-42A part.
If you do not want or cannot print flexible material, you can use part 01-42_ALT.
The hole in part 01-42A must be as tight as possible.
Use an M4x40 screw, washer and nut.

Chapter 01 - Lower hull

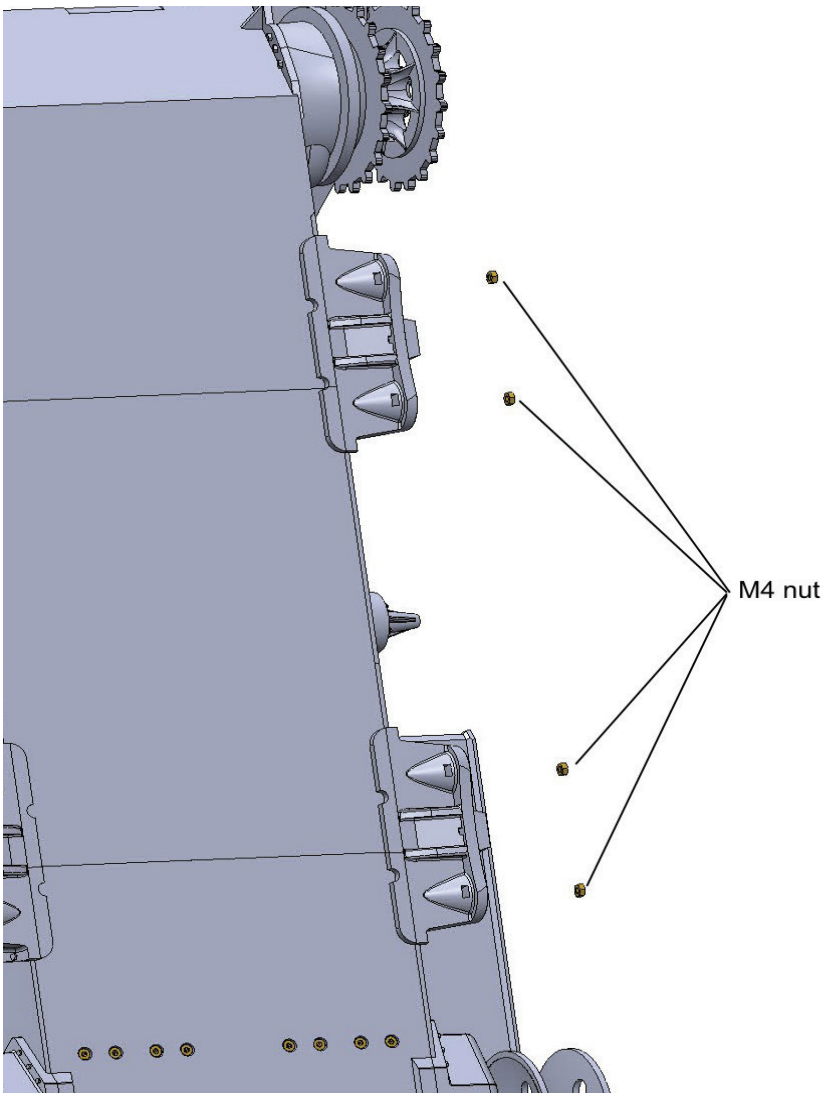

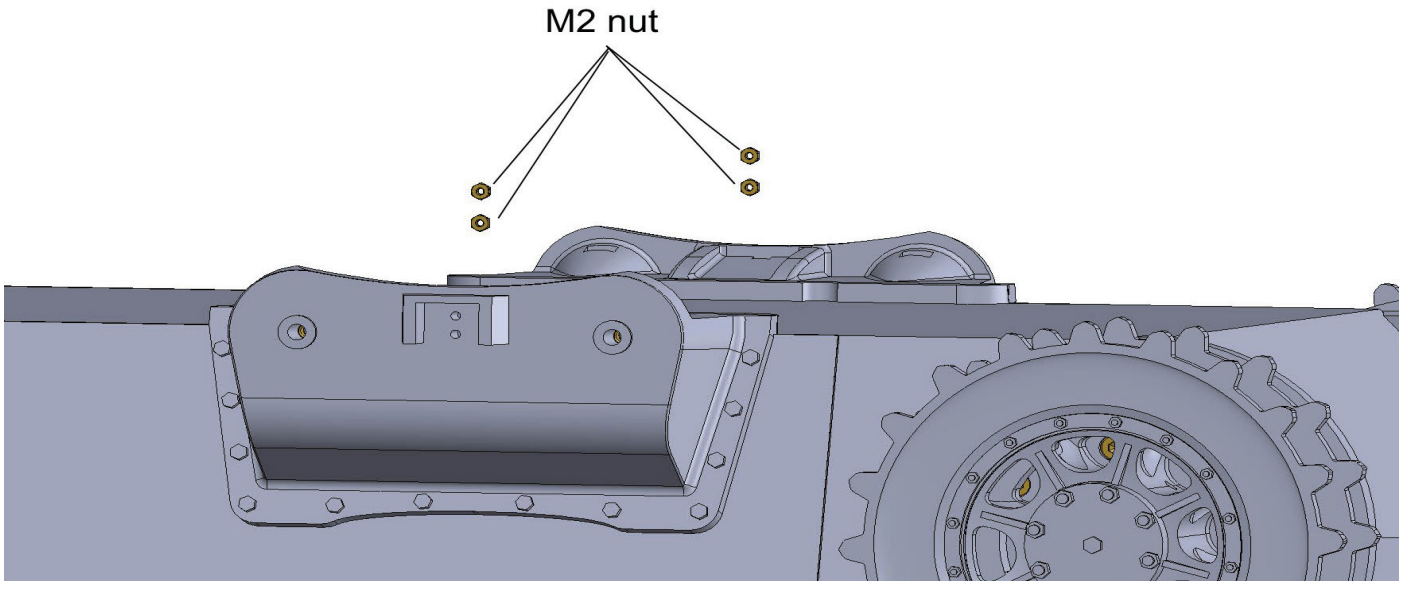

Insert 8 M2 nuts and 8 M4 nuts into parts 01-04 and 01-05.

Chapter 01 - Lower hull

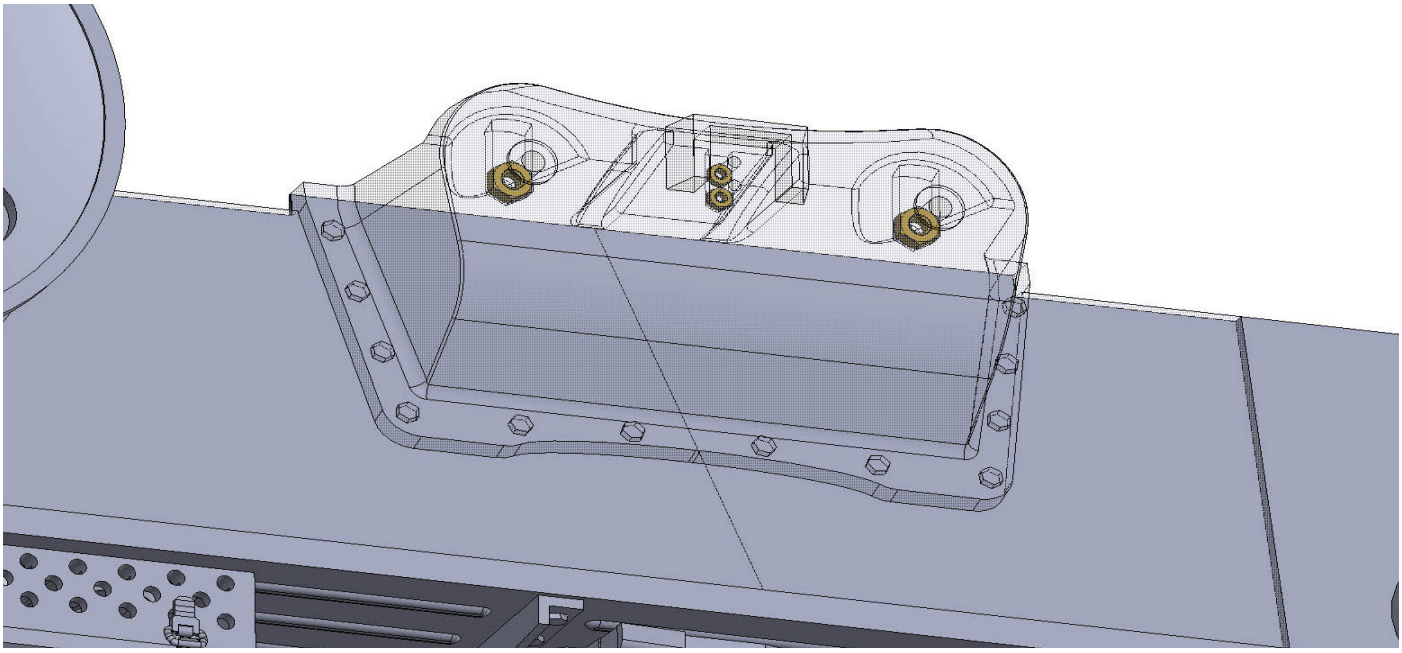

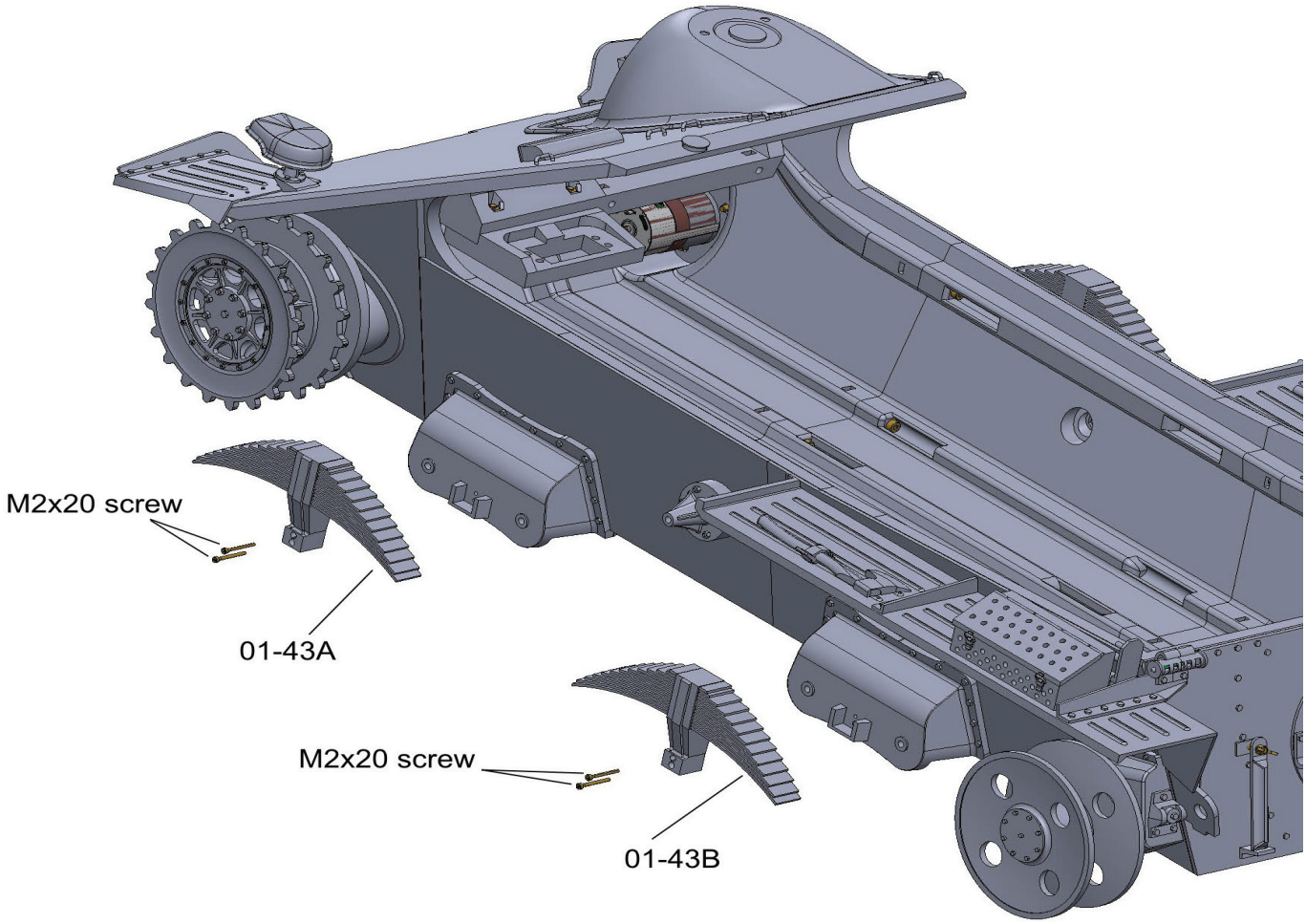

Install 01-43A and 01-43B using 8 M2x20 screws.

Chapter 01 - Lower hull

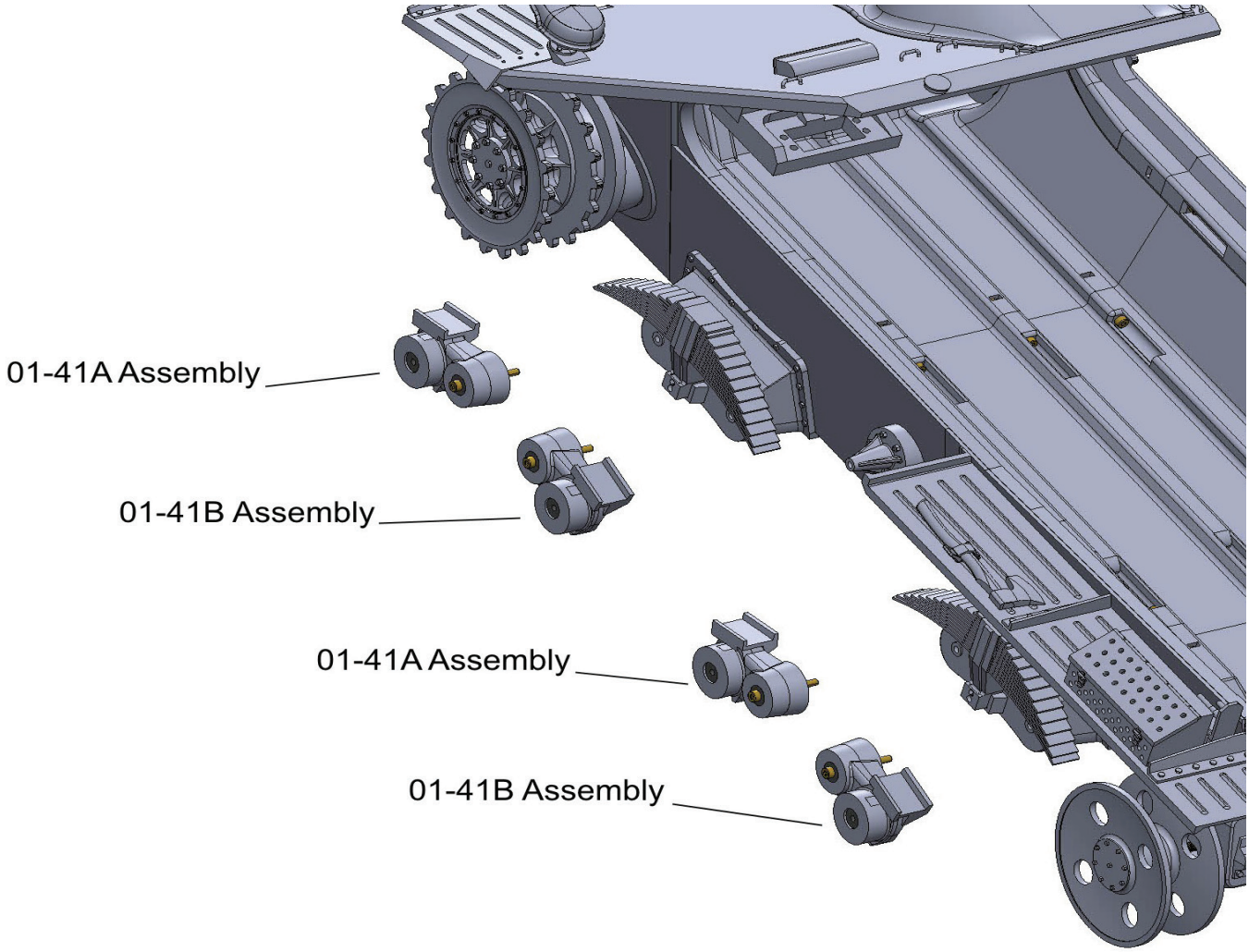

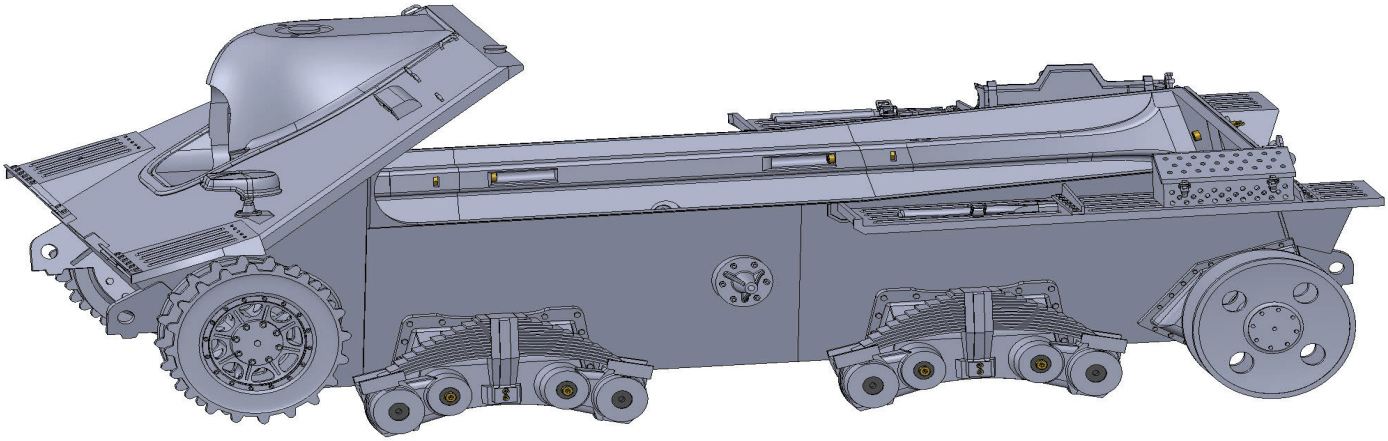

Install the prepared 01-41 subassemblies.
On each side there are two subassemblies with parts 01-41A and two subassemblies with parts 01-41B.

Chapter 01 - Lower hull

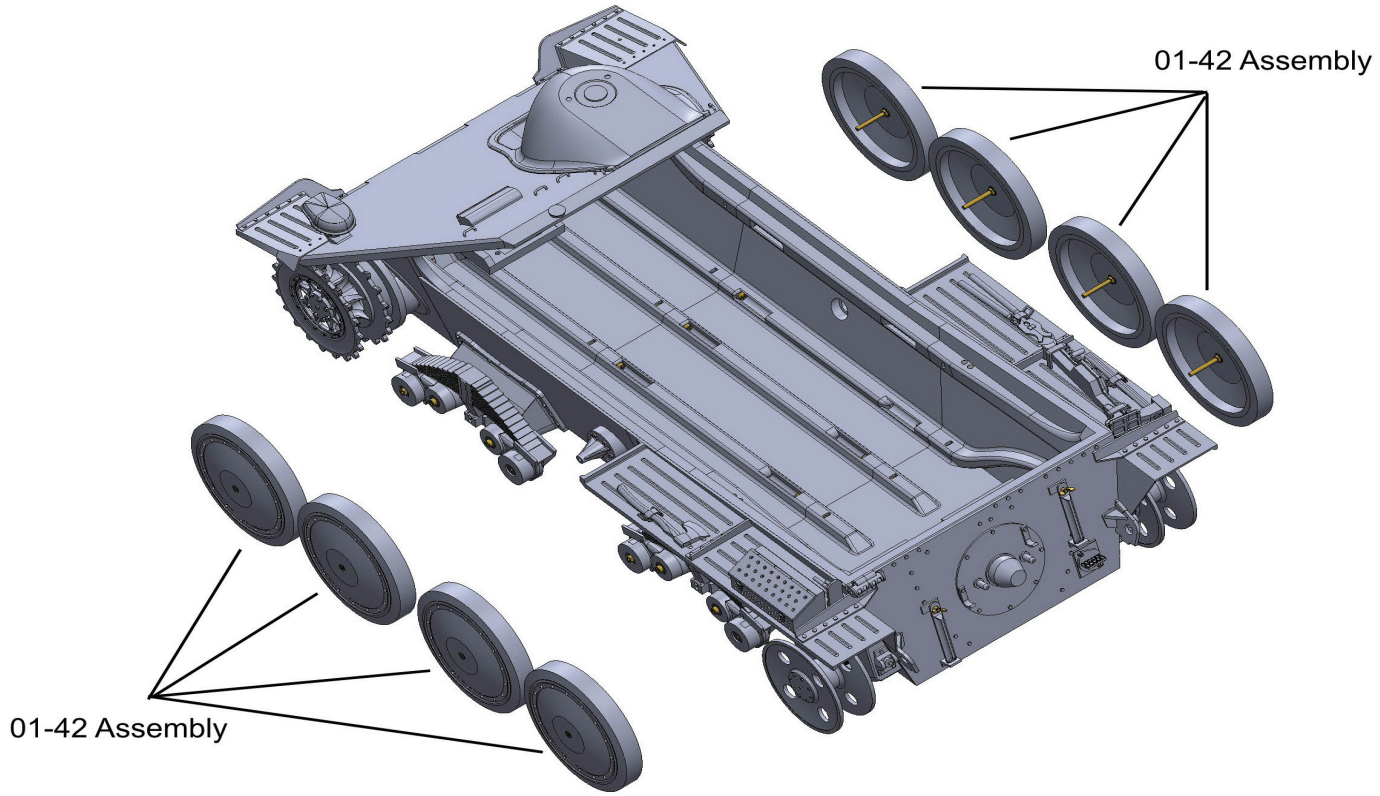

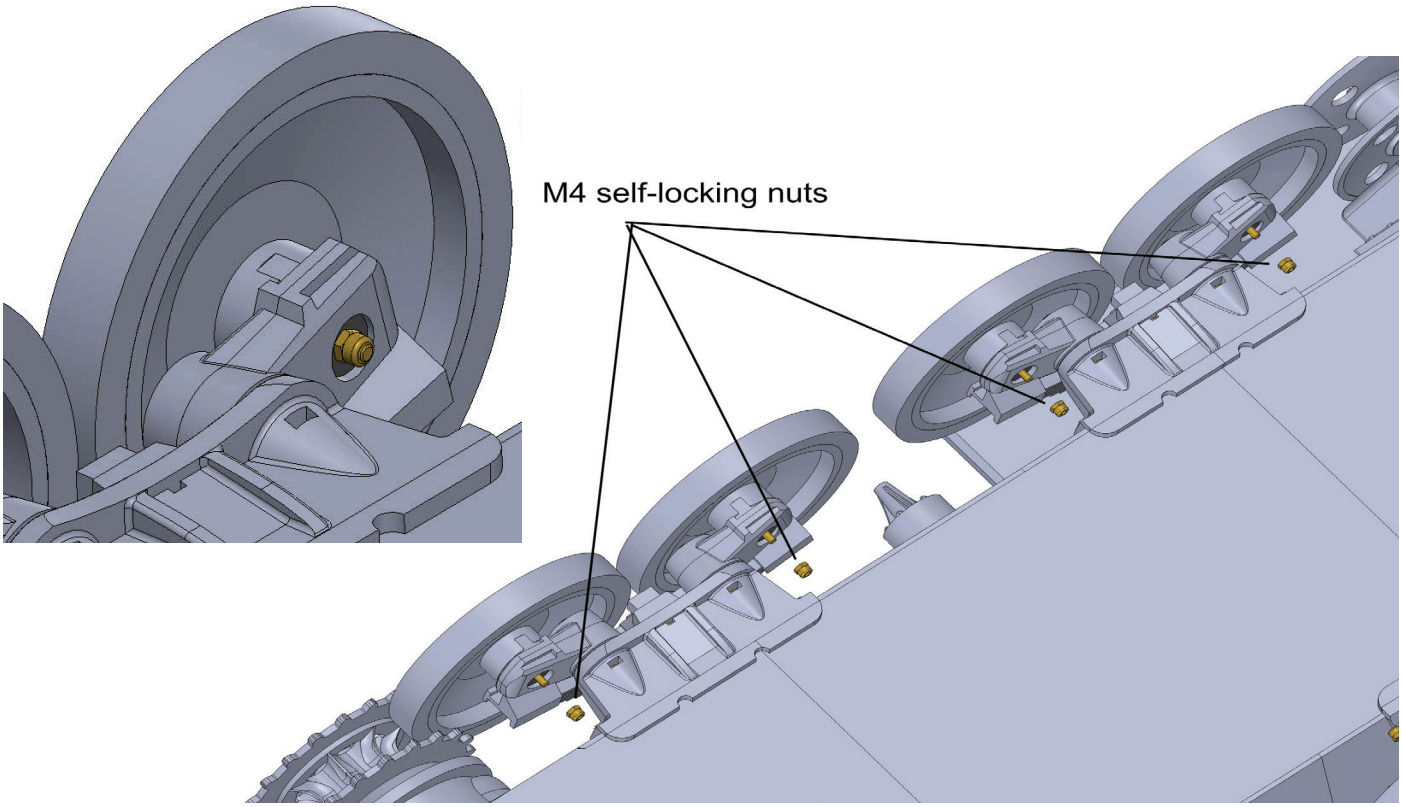

Install subassemblies 01-42.From the other side, secure with M4 self-locking nuts. Alternatively, you can use two normal M4 nuts on each wheel and fasten them against each other.

Chapter 01 - Lower hull

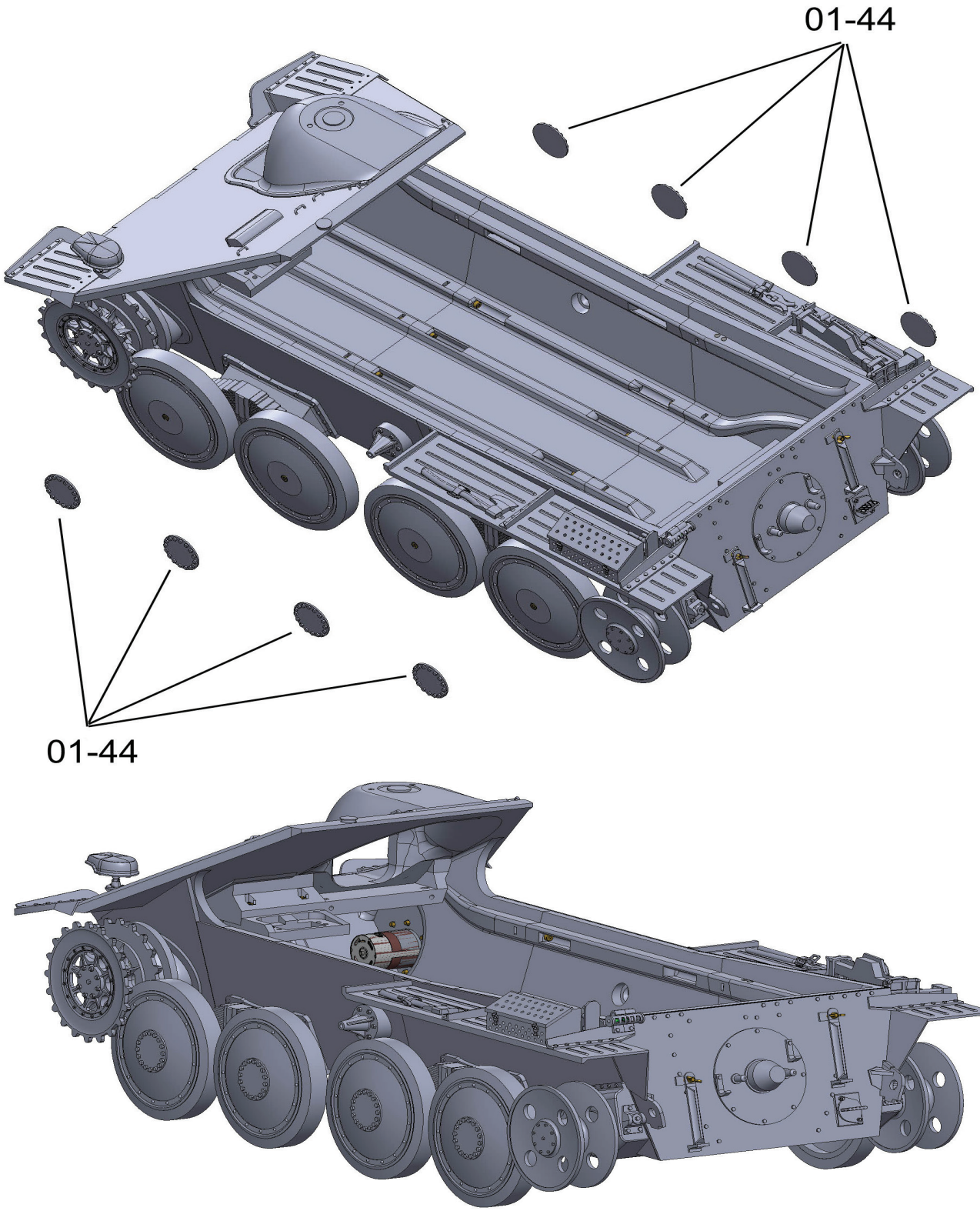

Cover the wheel bolts.Use blanks 01-44 on the wheels.
Make sure the wheels are installed correctly and all nuts are tightened.If possible, glue the parts in the way so that they can be peeled off in the future.

Chapter 01 - Lower hull

2x

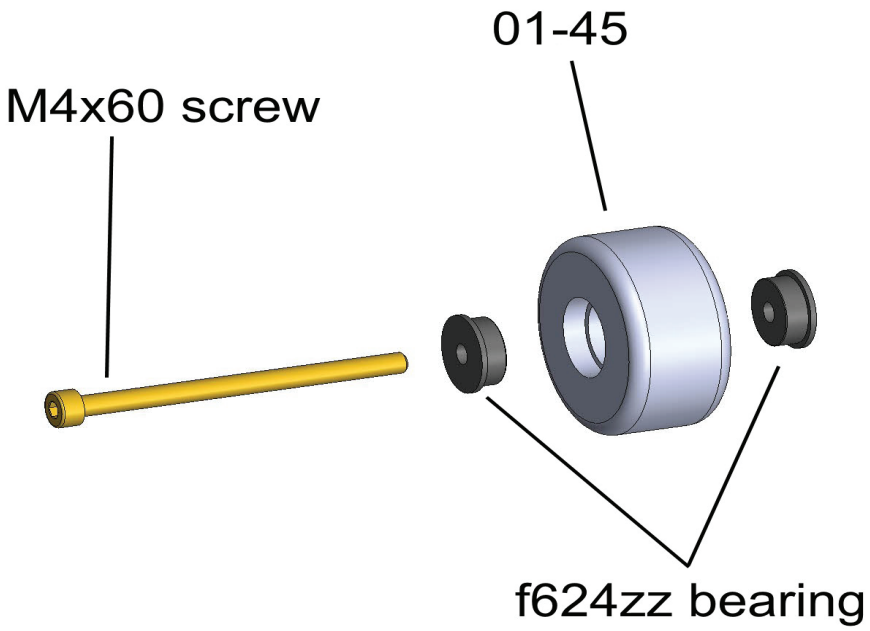

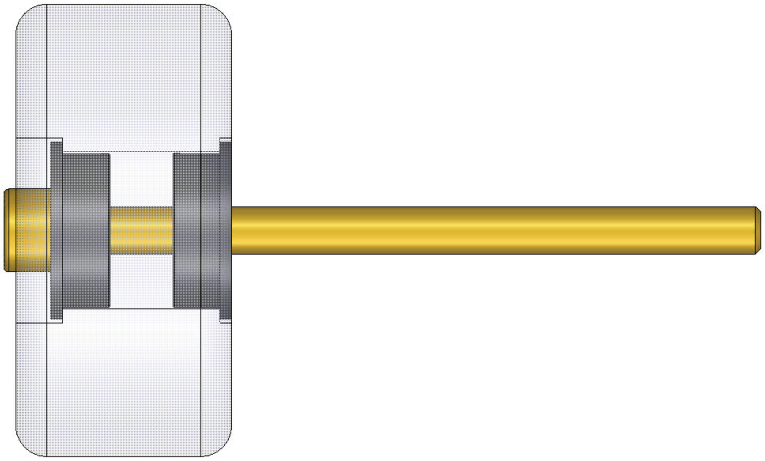

Insert two f624zz bearings into parts 01-45.
Insert an M4x60 screw into each subassembly.

Chapter 01 - Lower hull

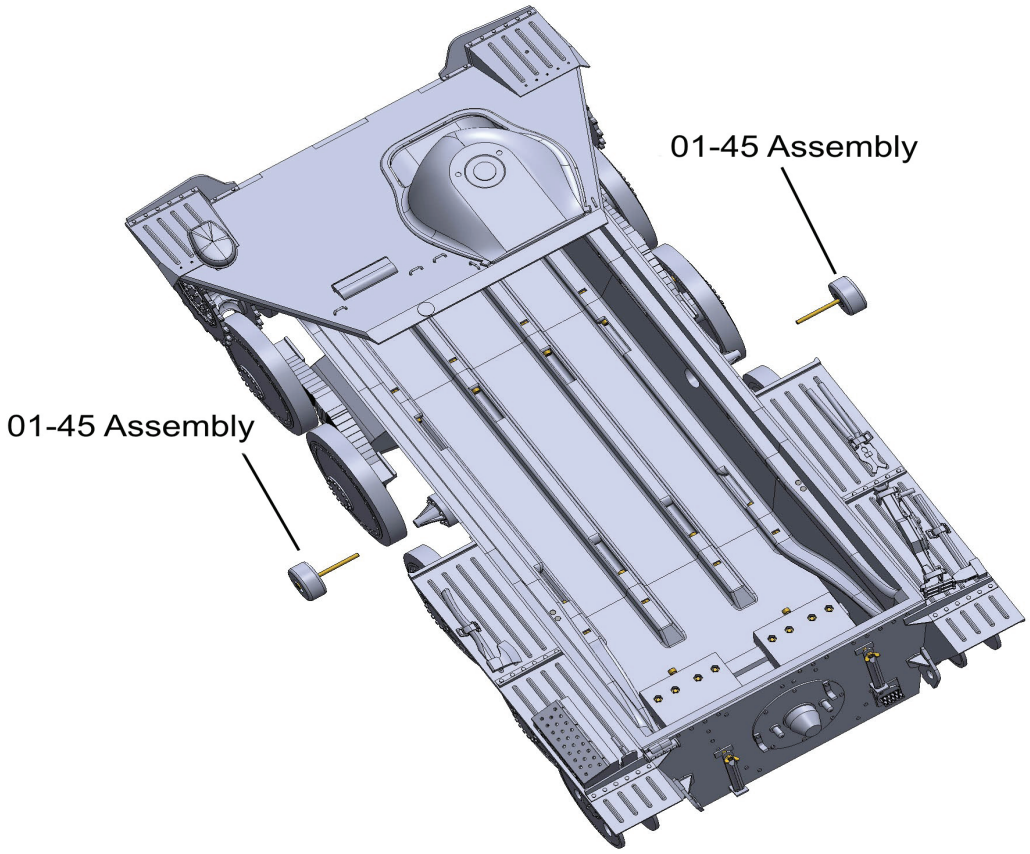

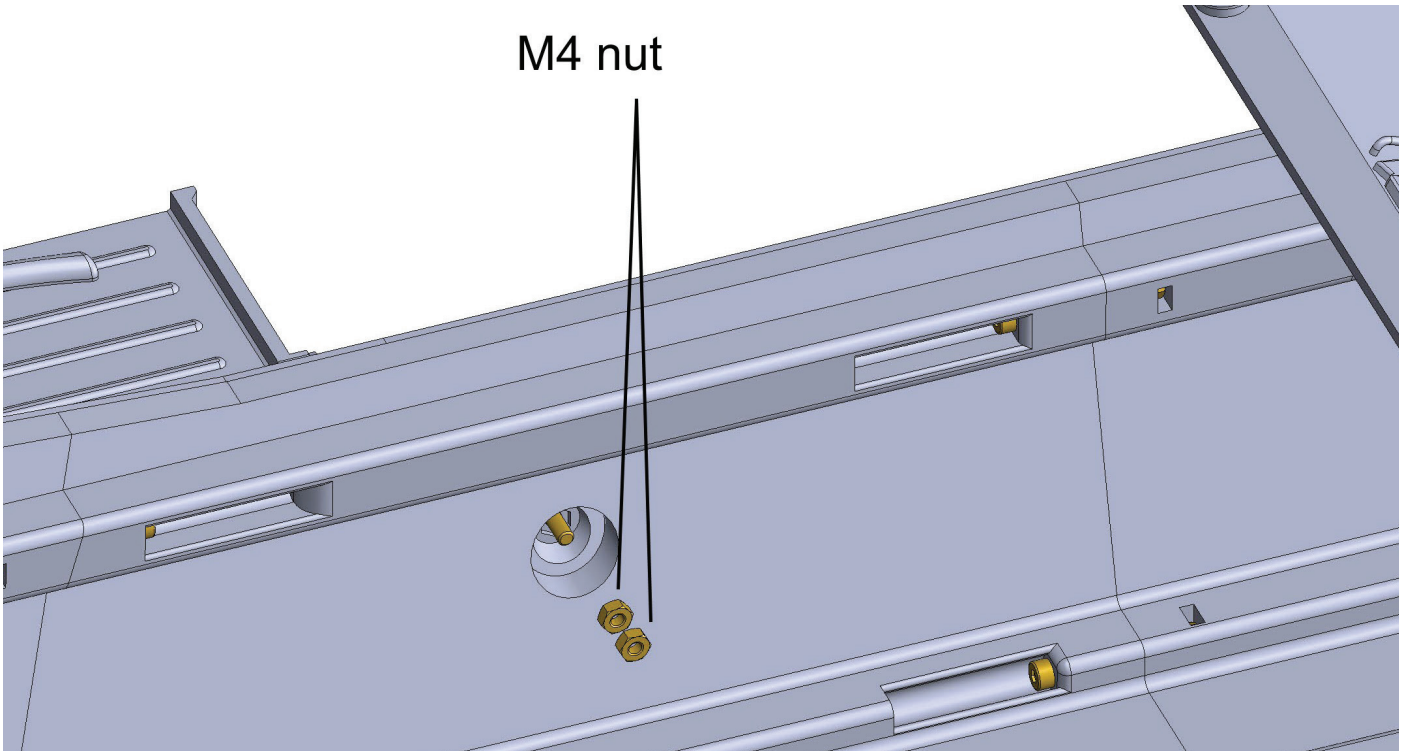

Install parts 01-45.
Then secure with two M4 nuts (or one self-locking nut).

Chapter 02 - Cannon

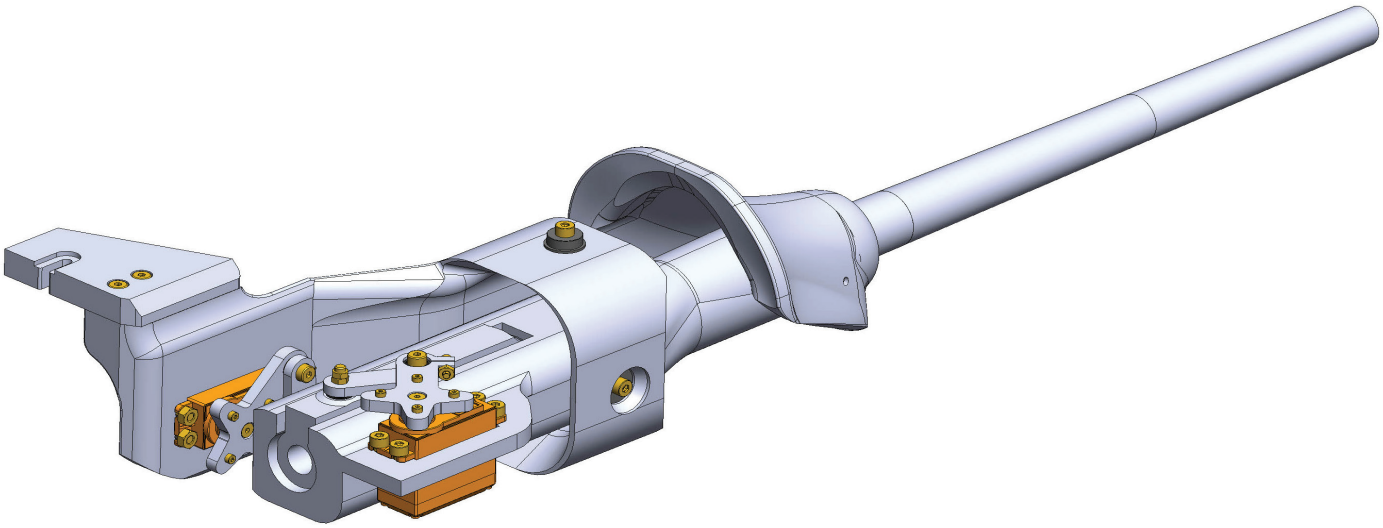

AMOUNT:	1
PRINTED PARTS:	02-01 (1x), 02-02 (1x) ,02-03 (2x), 02-04 (1x), 02-05(1x), 02-06 (1x), 02-07 (1x), 02-08 (1x), 02-09(1x), 02-10 (1x), 02-11 (1x), 02-12 (1x), 02-13A (1x), 02-13B (1x), 02-14(1x), 02-15 (1x), 02-16 (1x), 02-17 (1x).
OPTIONAL PRINTED PARTS:	02-04_alt, 02-12_alt, 02-16_alt.
NON-PRINTED PARTS:	M4x40 screw (2x), M4x30 screw (2x), M4x20 screw (6x), M4x16 screw (11x), M3x25 screw (4x), M3x16 screw (2x), M2x6 screw (12x), M2x10 screw (6x), M3x10 screw DIN913 (2x) M4 self-locking nut (2x), M4 nut (20x), M3 nut (15x), M2 nut (15x), M4 washer (2x), M3 washer (2x), F624zz bearing (5x), 623zz bearing (6x), Servo MG995 + arm + screw (3x).

Chapter 02 - Cannon

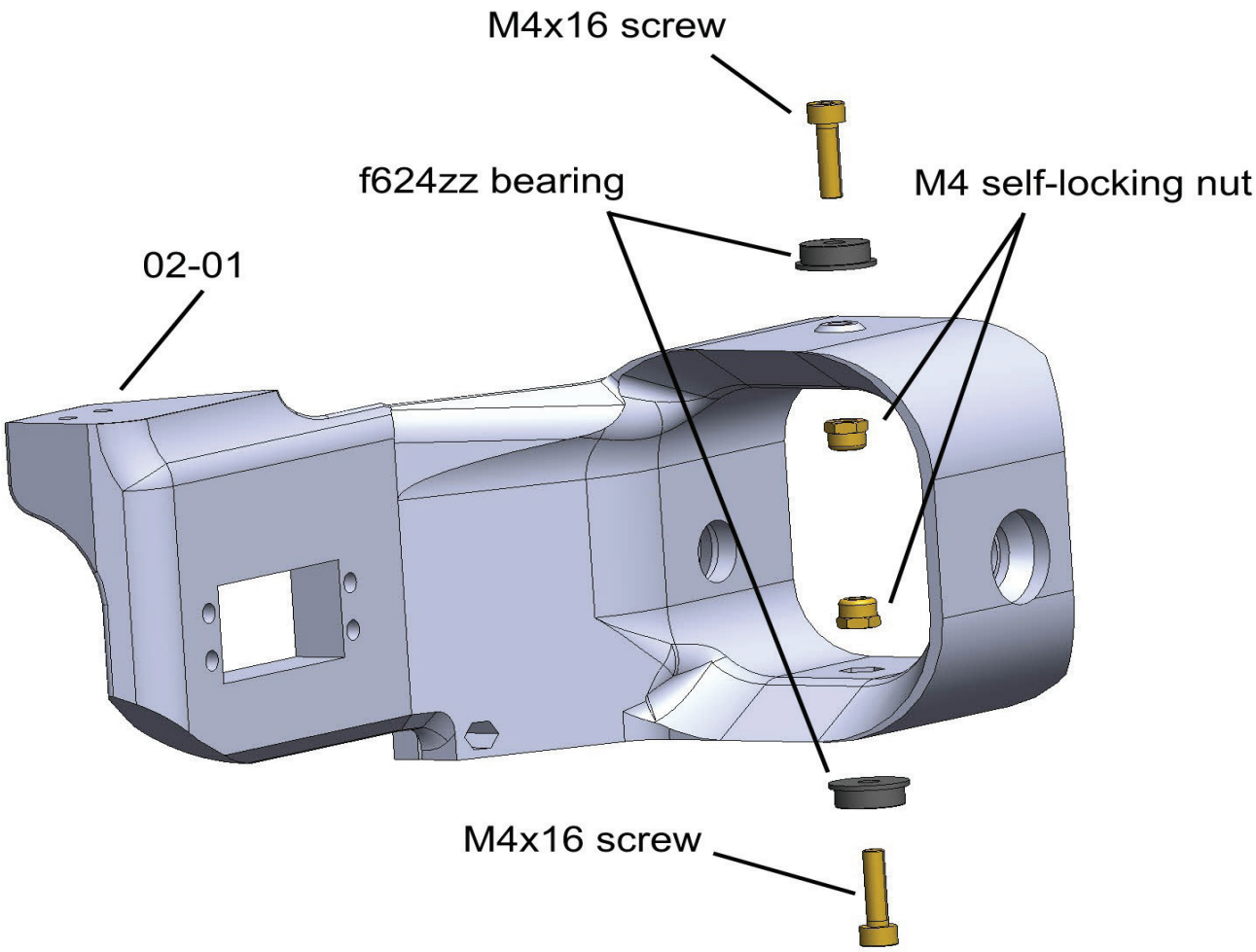

Insert two f624zz bearings into part 02-01.
Secure bearings with two M4x16 screws and self-locking nuts.

Chapter 02 - Cannon

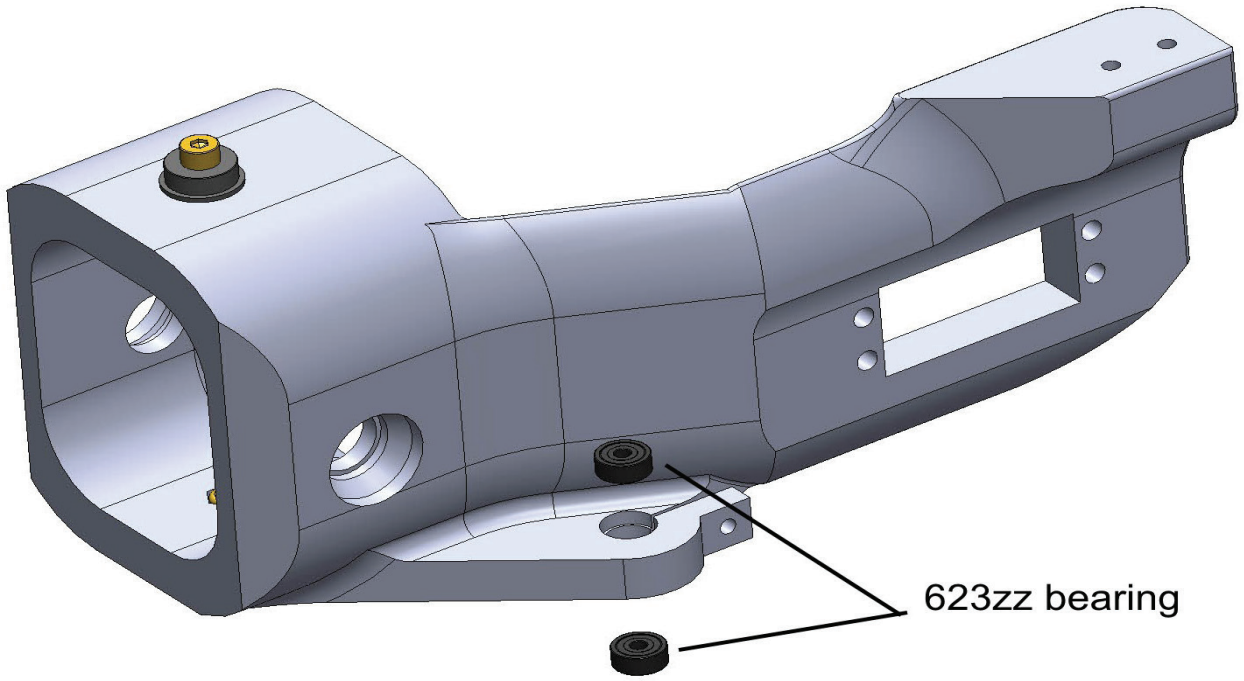

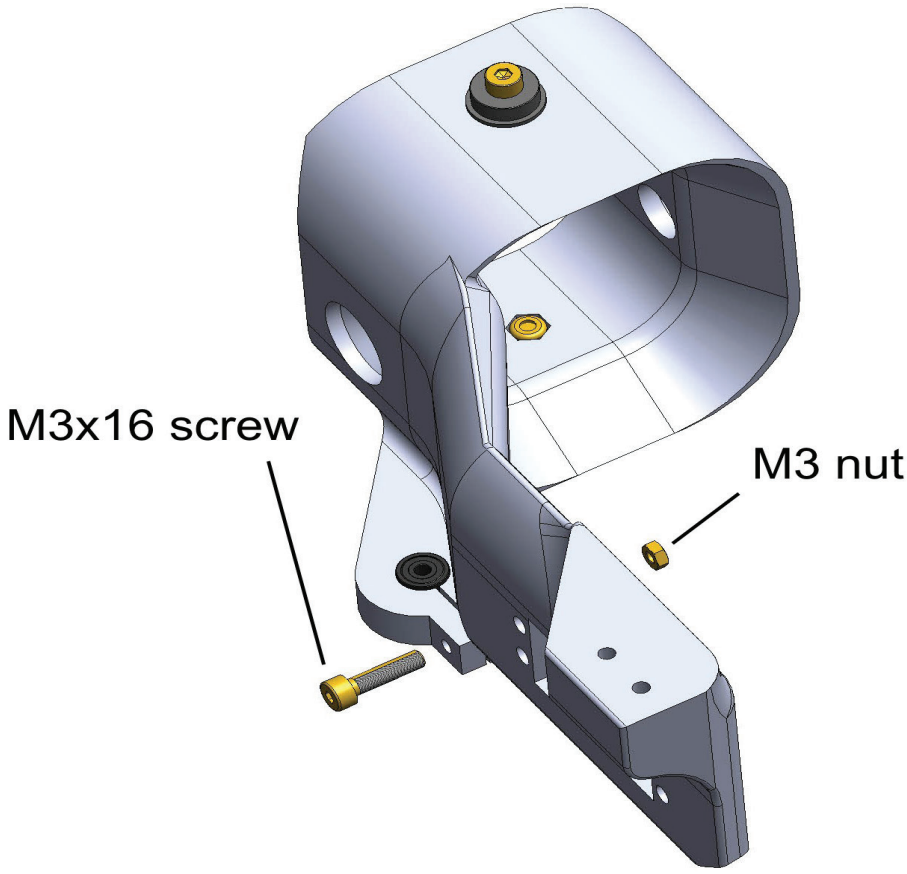

Insert two 623zz bearings into part 02-01.
Secure bearings with M3x16 screw and M3 nut.

Chapter 02 - Cannon

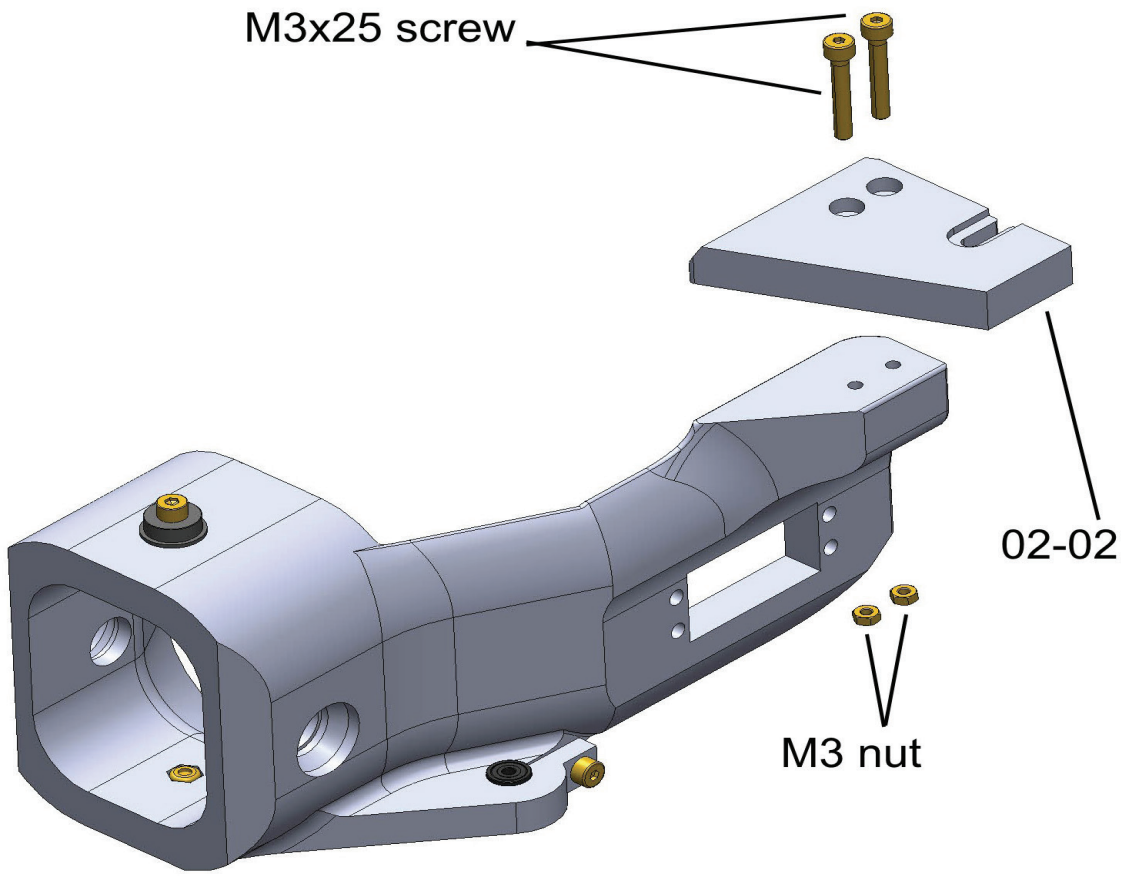

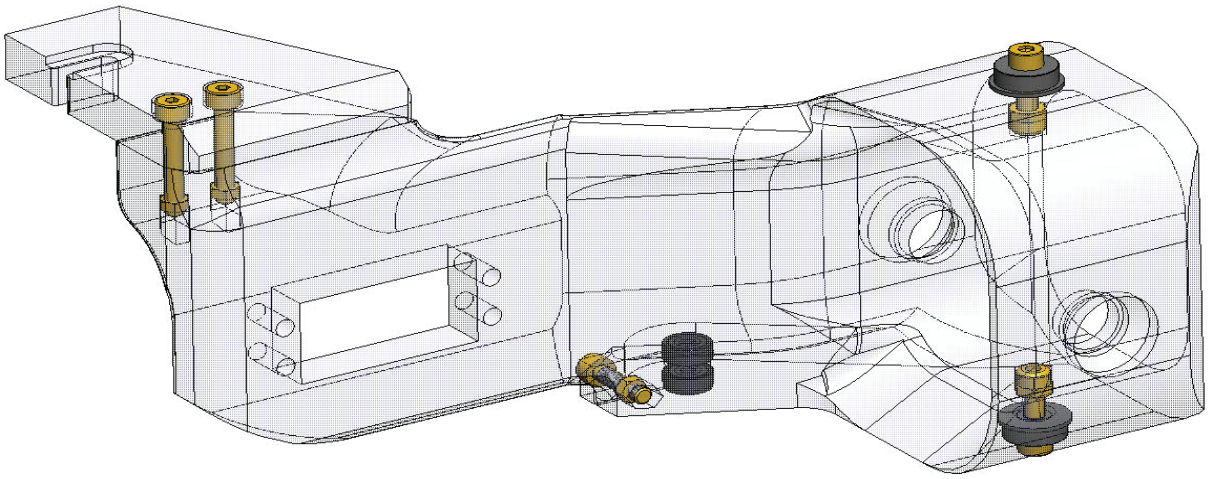

Attach part 02-02 with a M3x25 screws.
Secure with two M3 nuts.

Chapter 02 - Cannon

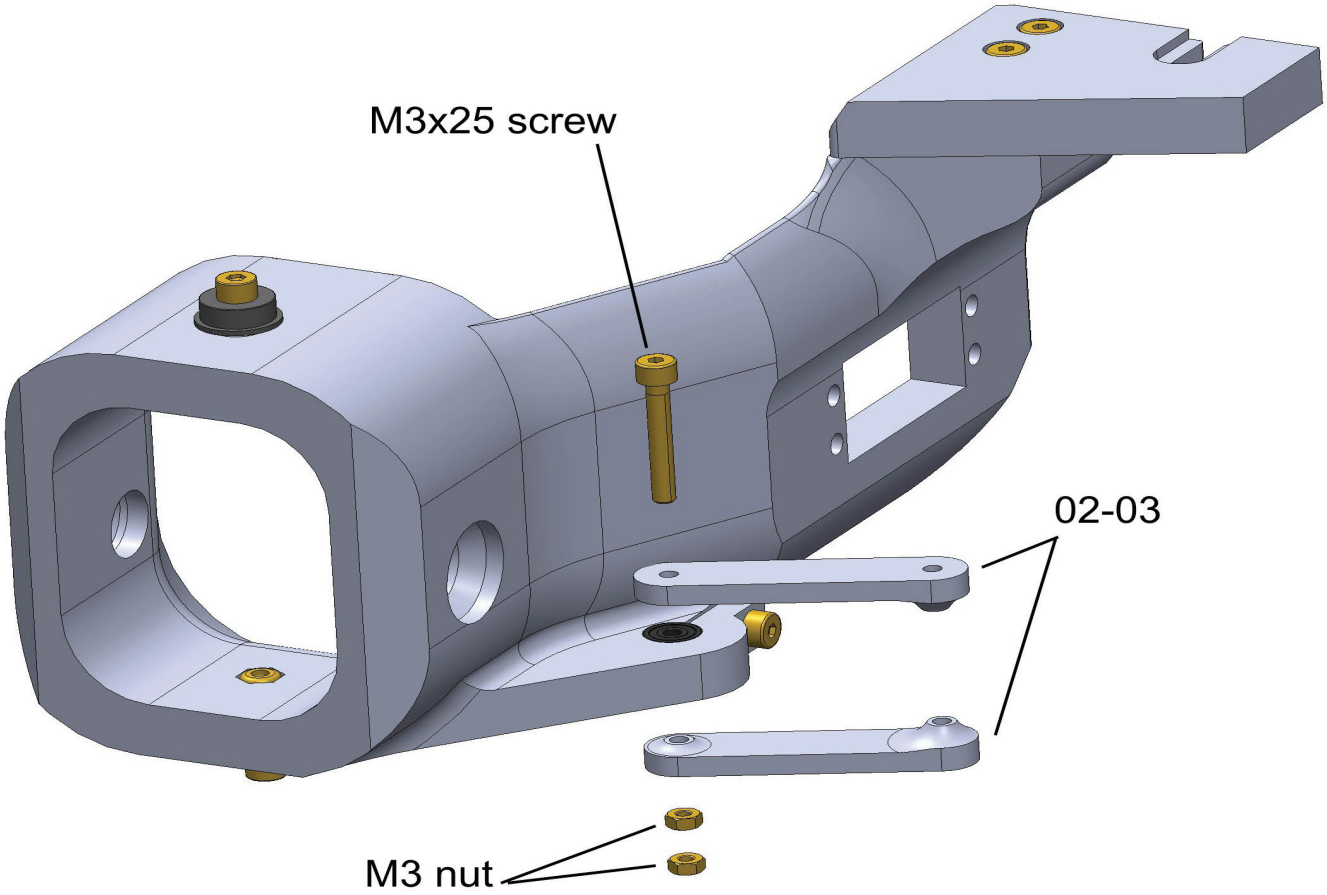

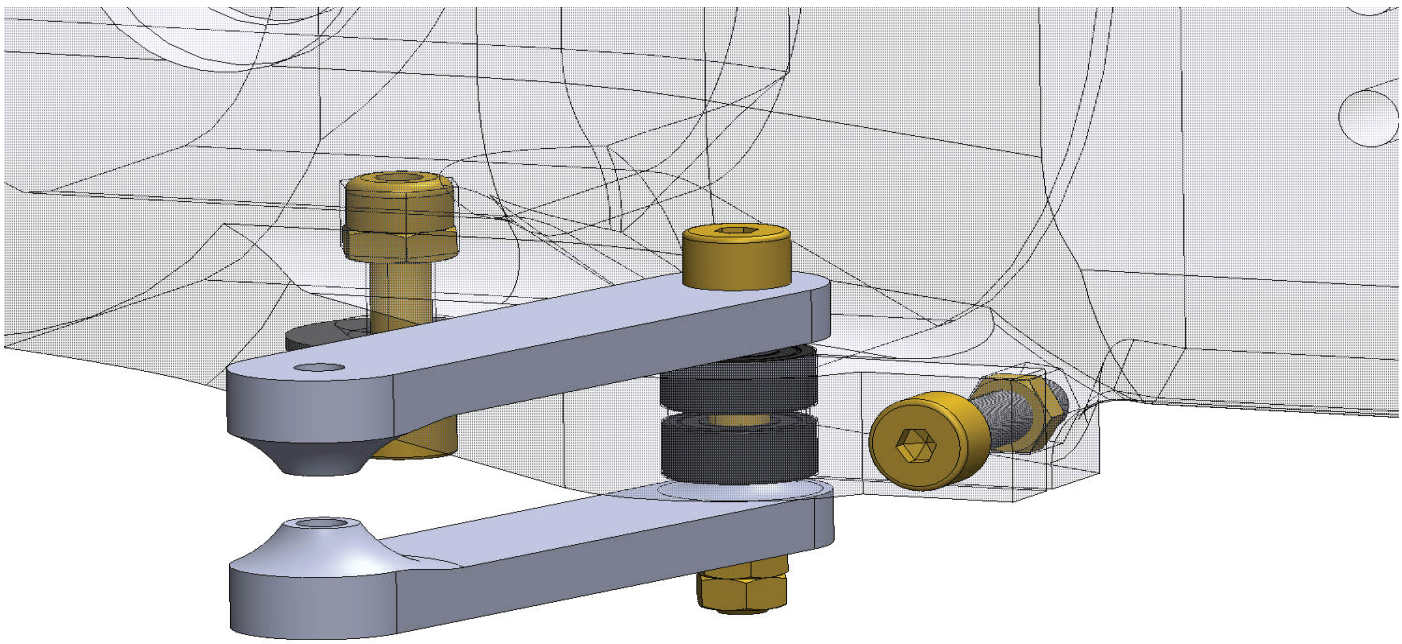

Attach two parts 02-03 with a M3x25 screw.
Secure with two M3 nuts.

Chapter 02 - Cannon

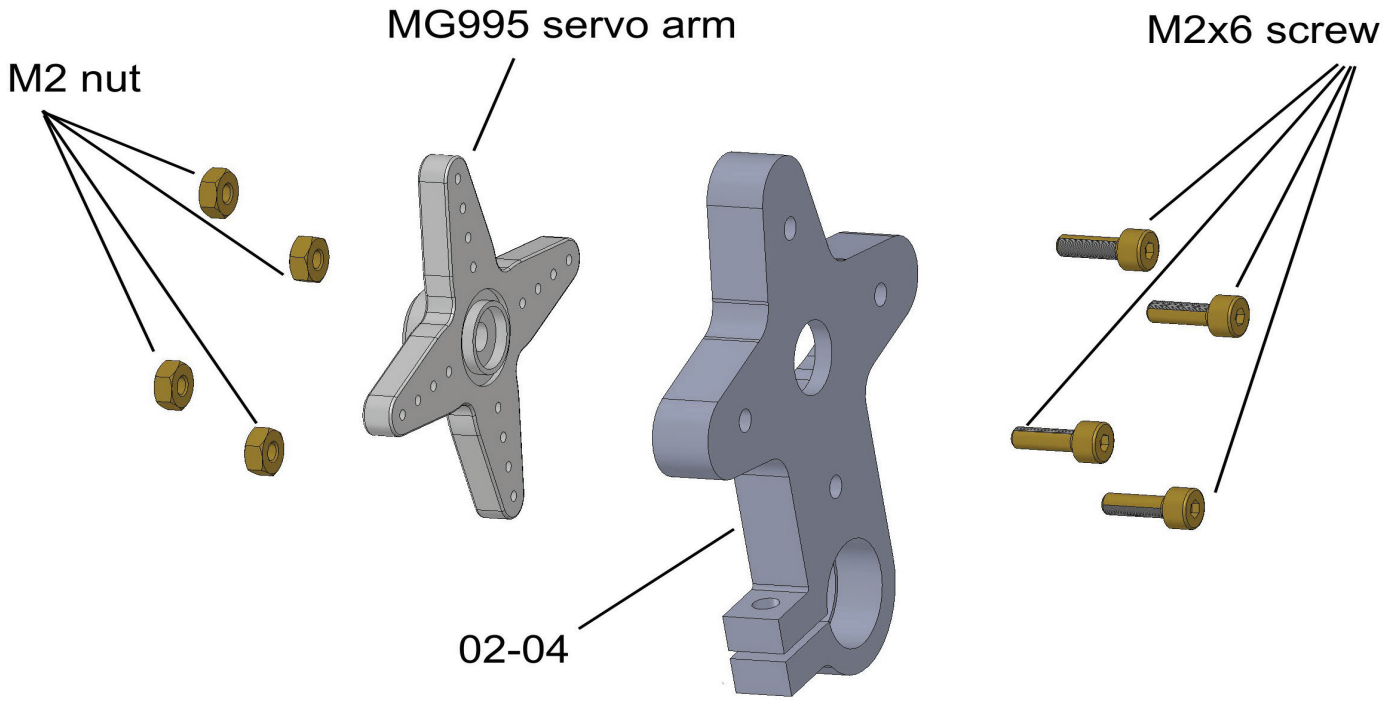

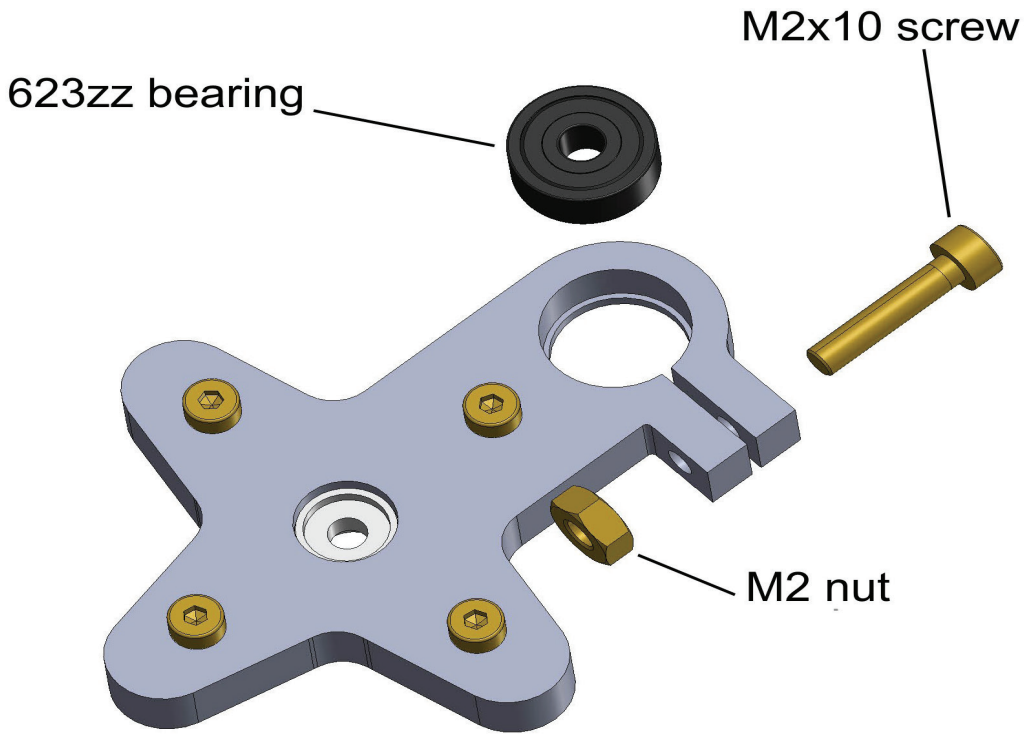

Attach part 02-04 to the MG995 servo arm.
Secure with four M2x6 screws and M4 nuts.Use drill if needed.
Put 623zz bearing into the part 02-04.
Secure with M2x10 screw and M2 nut.

Chapter 02 - Cannon

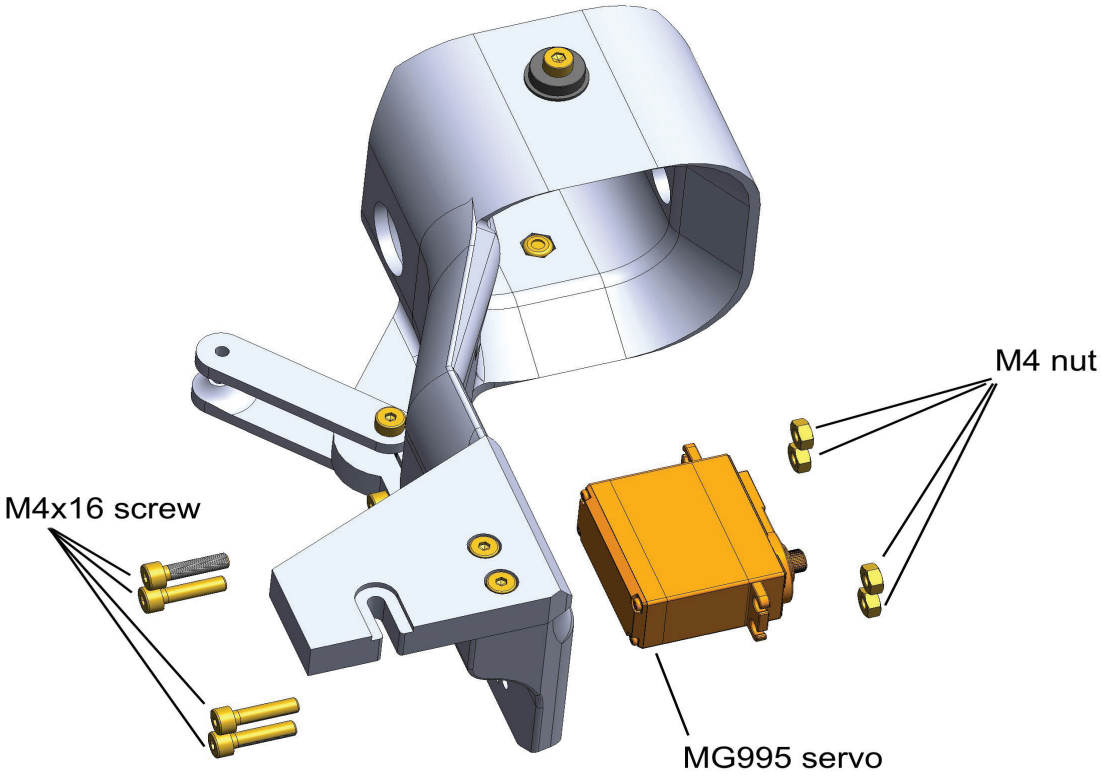

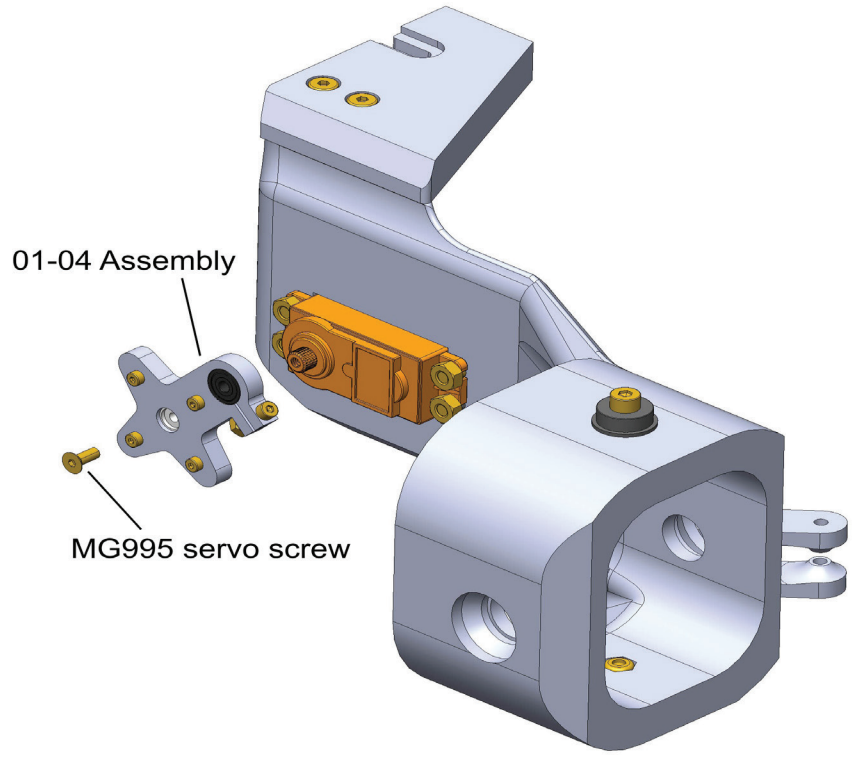

Attach MG995 servo to part 02-01.
Secure with four M4x16 screws and M4 nuts.
Attach 02-04 subassembly to MG995 servo.
Secure with servo screw.

Chapter 02 - Cannon

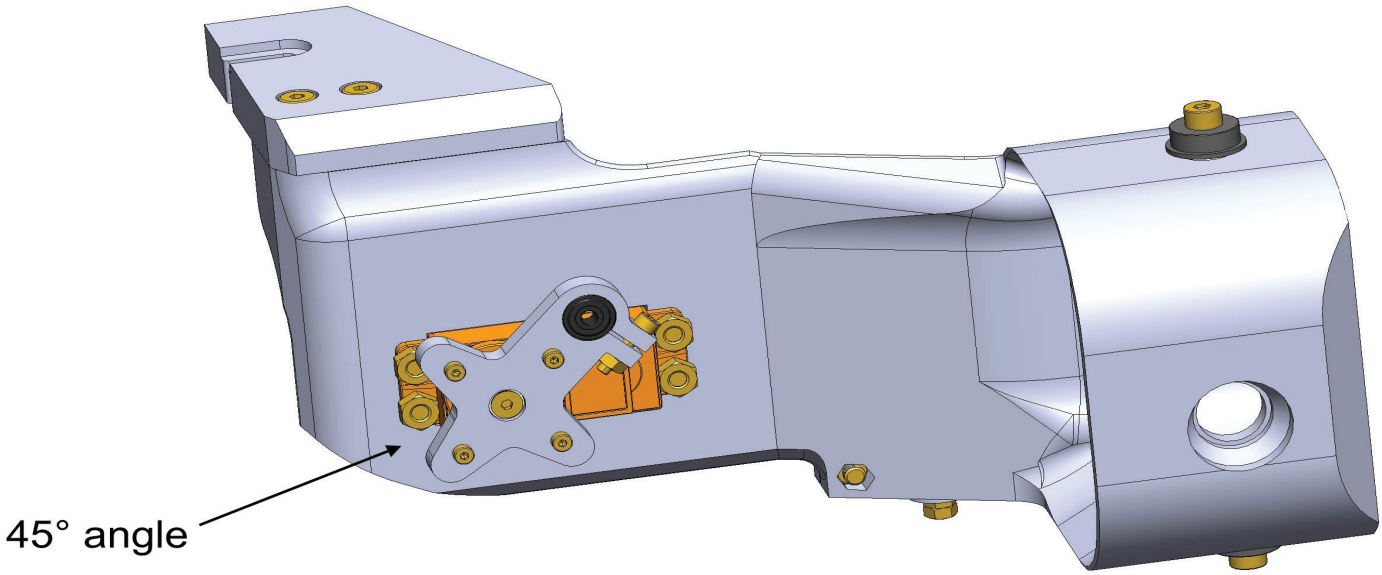

Default angle for the servo arm is 45°.

Chapter 02 - Cannon

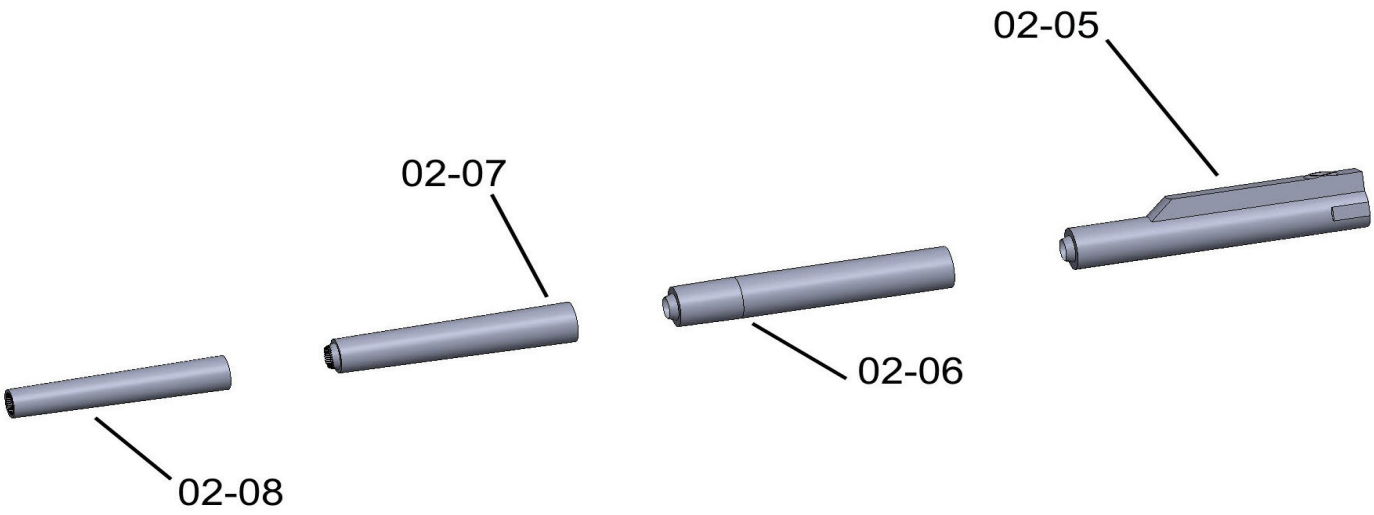

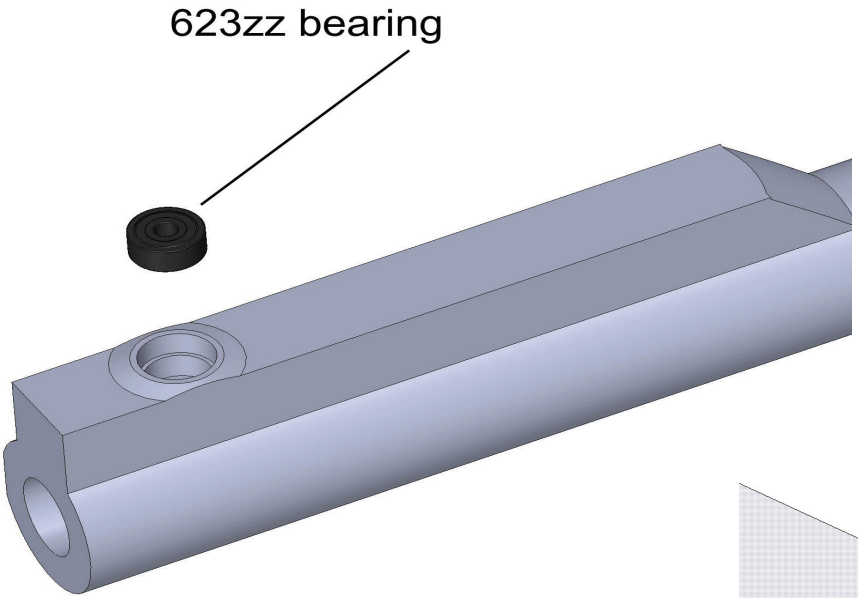

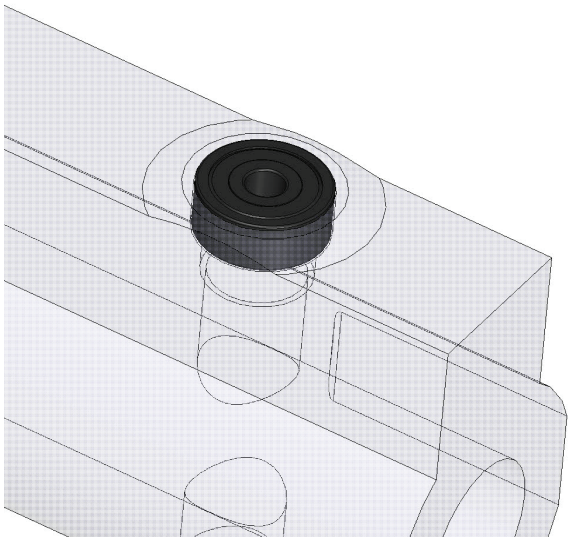

Glue parts 02-05, 02-06, 02-07 and 02A-08 together.
Glue the 623zz bearing into part 02A-04.

Chapter 02 - Cannon

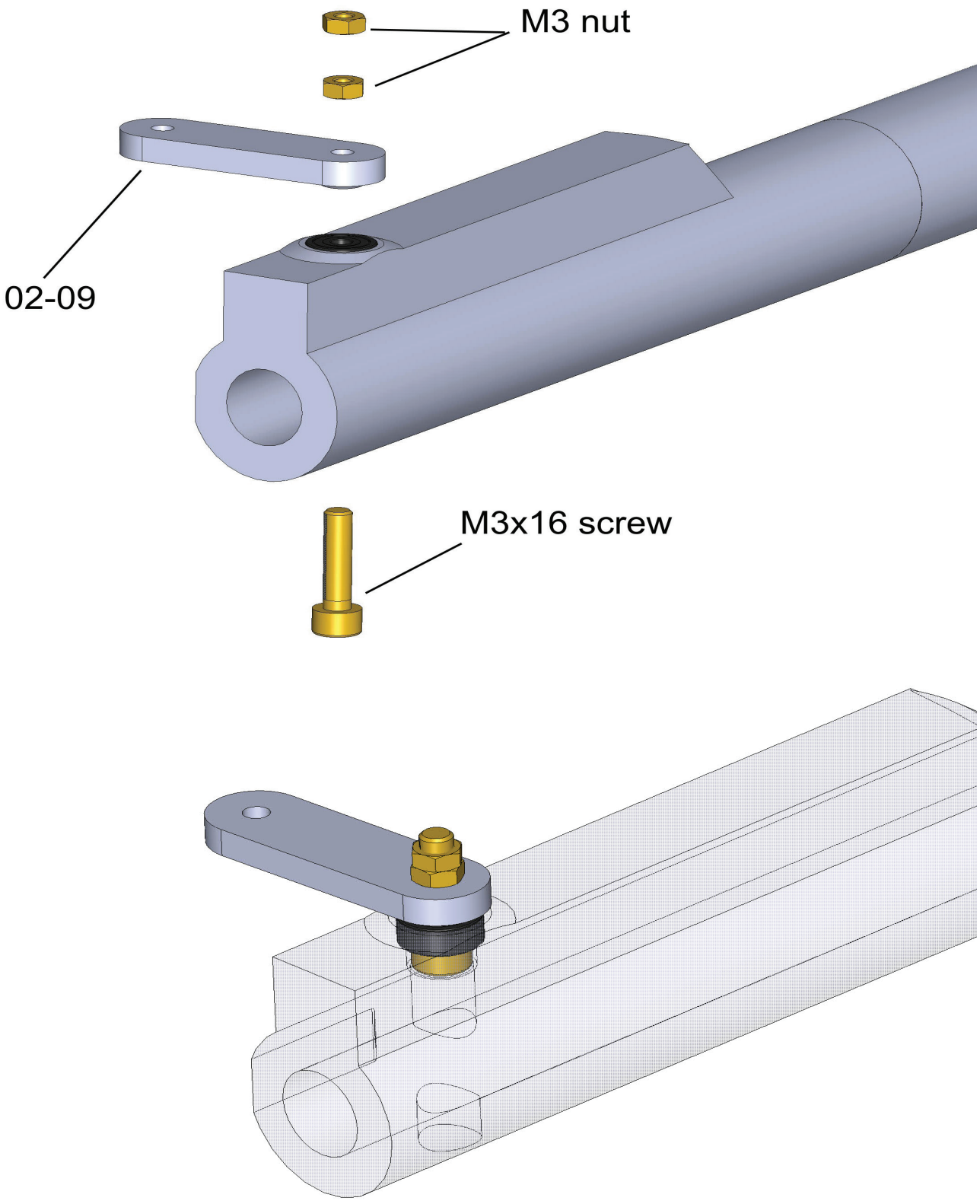

Attach part 02-09 with M3x16 screw and two M3 nuts.

Chapter 02 - Cannon

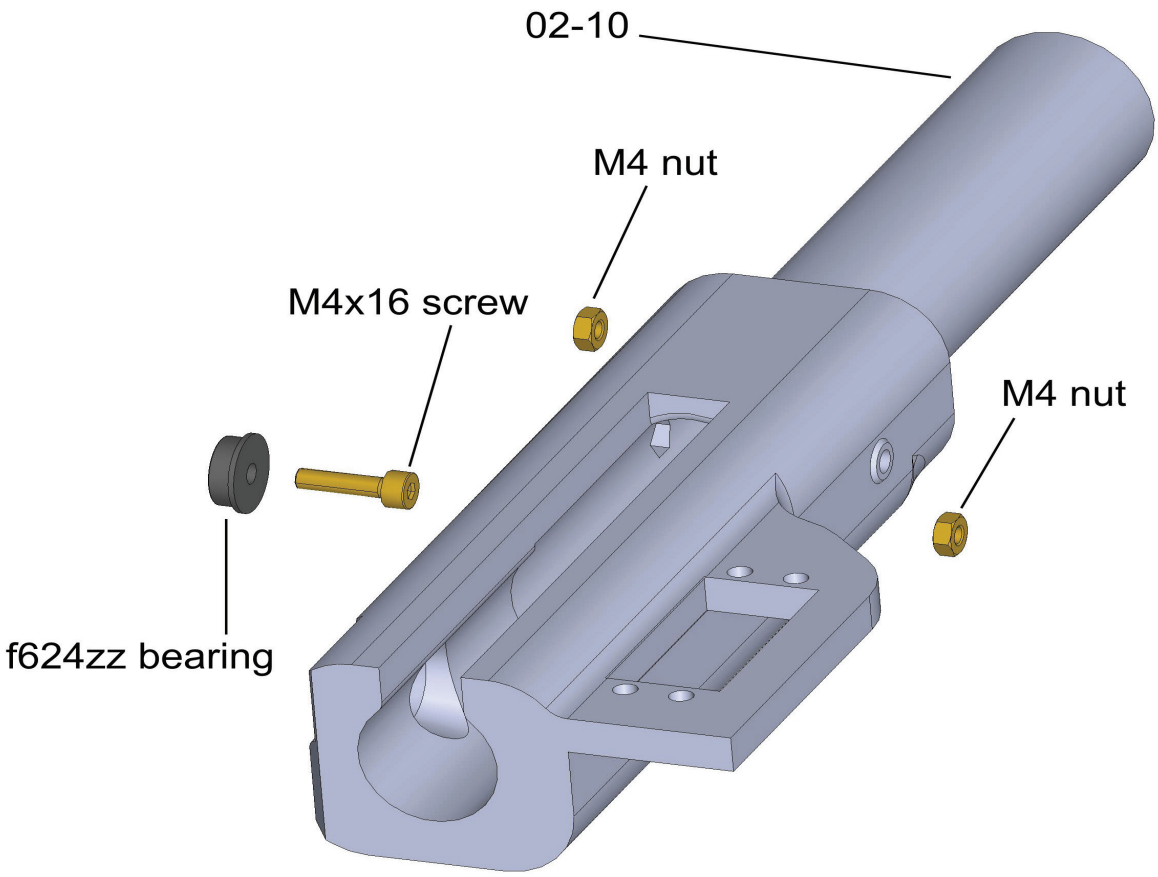

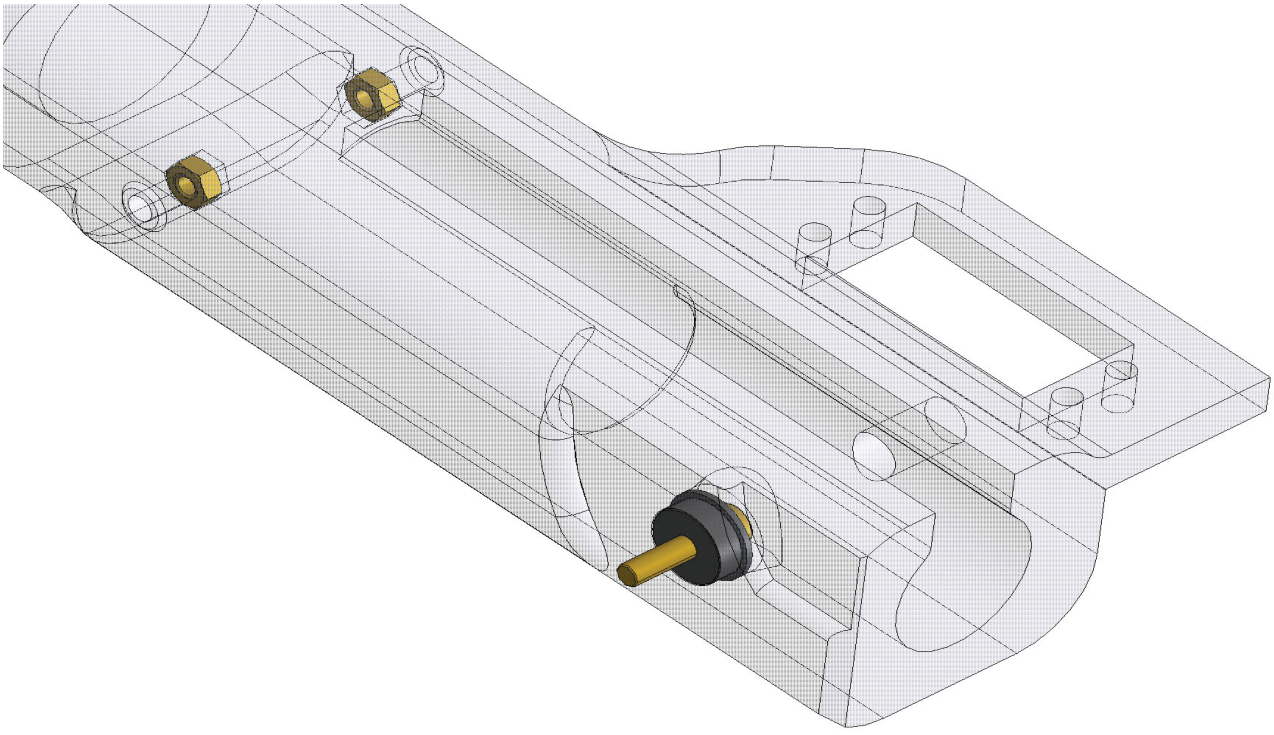

Insert two M4 nuts into part 02-10.
Insert f624zz bearing with M4x16 screw.

Chapter 02 - Cannon

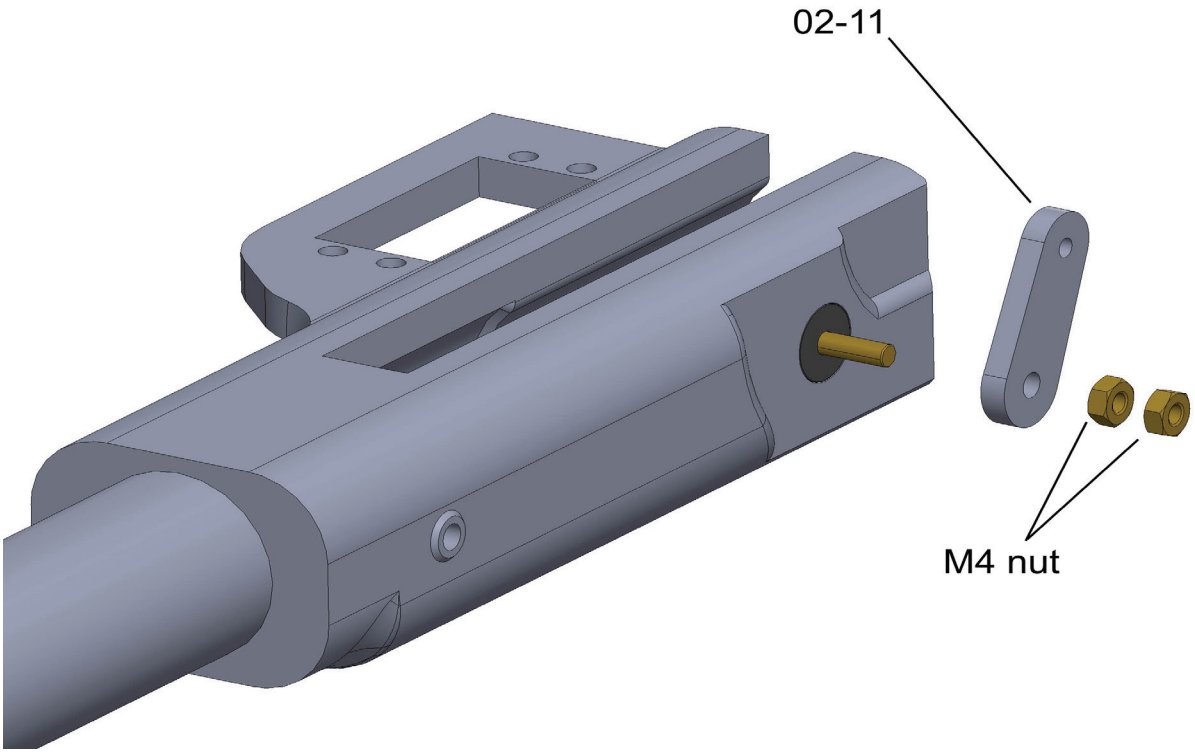

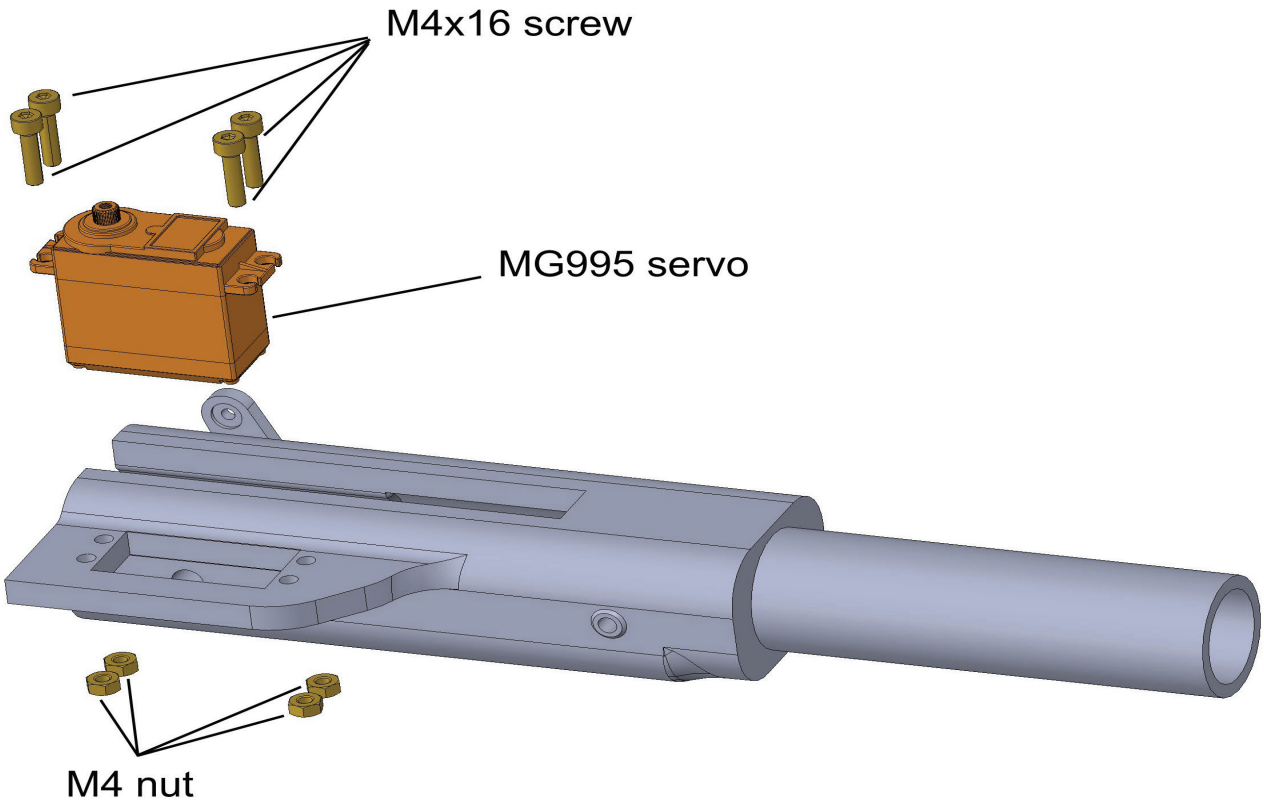

Attach part 02-11 with two M4 nuts.
Attach MG995 servo to part 02-10.
Secure with four M4x16 screws and M4 nuts.

Chapter 02 - Cannon

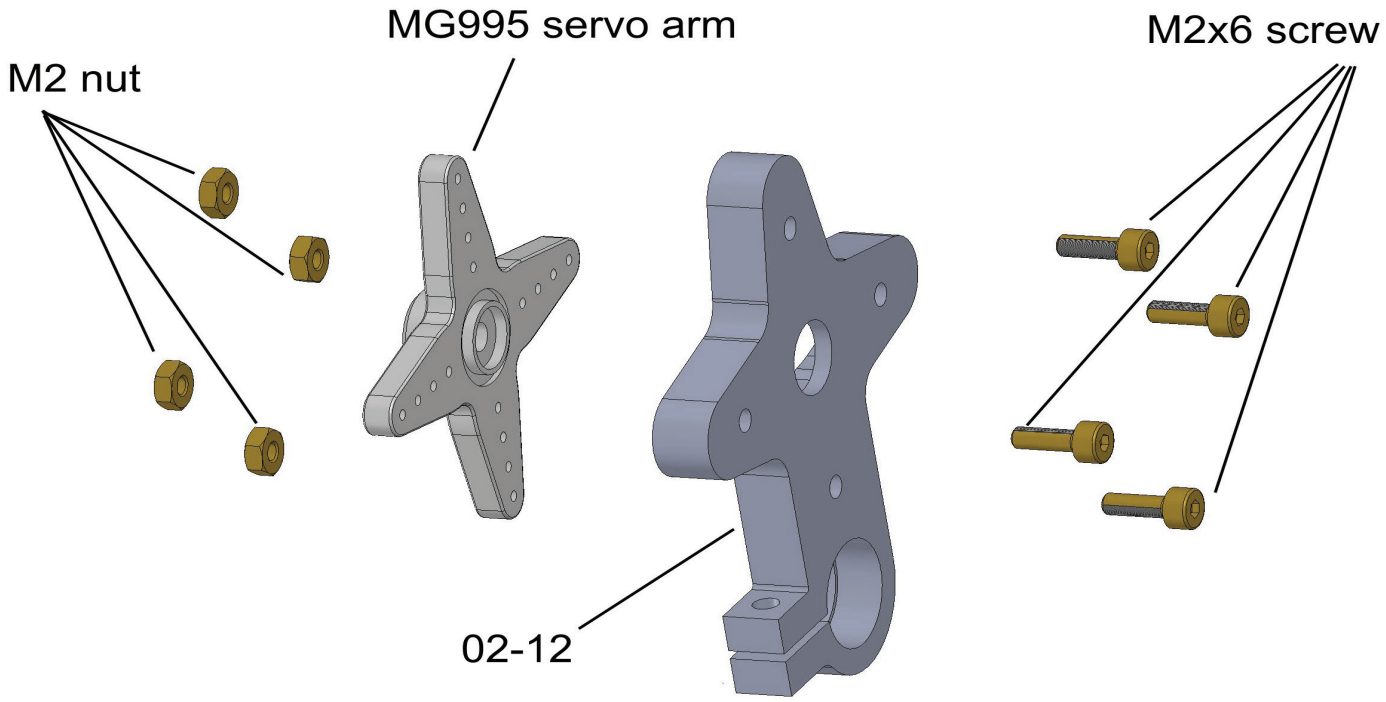

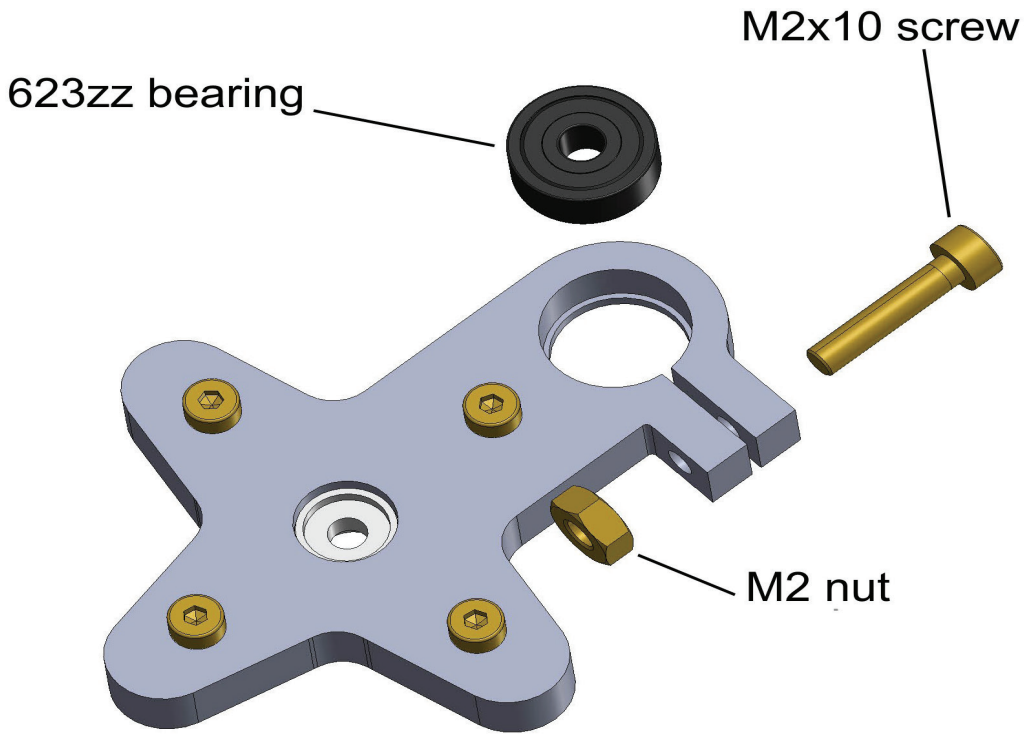

Attach part 02-12 to the MG995 servo arm.
Secure with four M2x6 screws and M4 nuts.Use drill if needed.
Put 623zz bearing into the part 02-12.
Secure with M2x10 screw and M2 nut.

Chapter 02 - Cannon

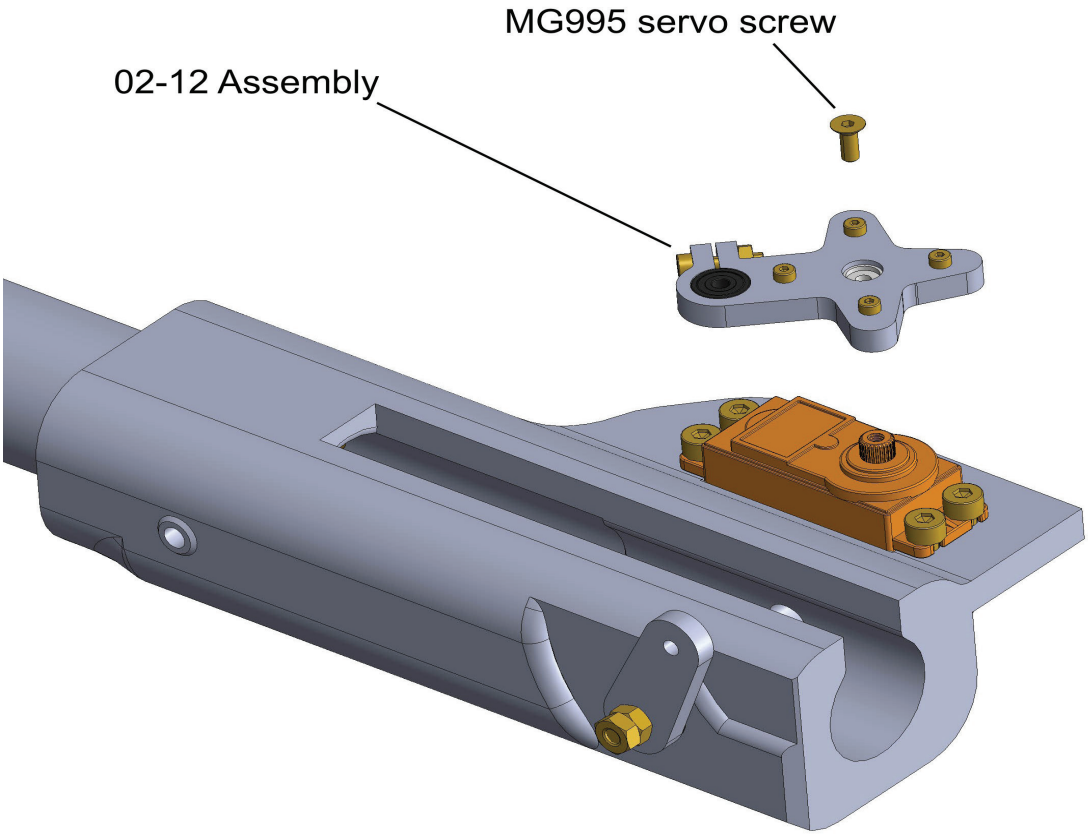

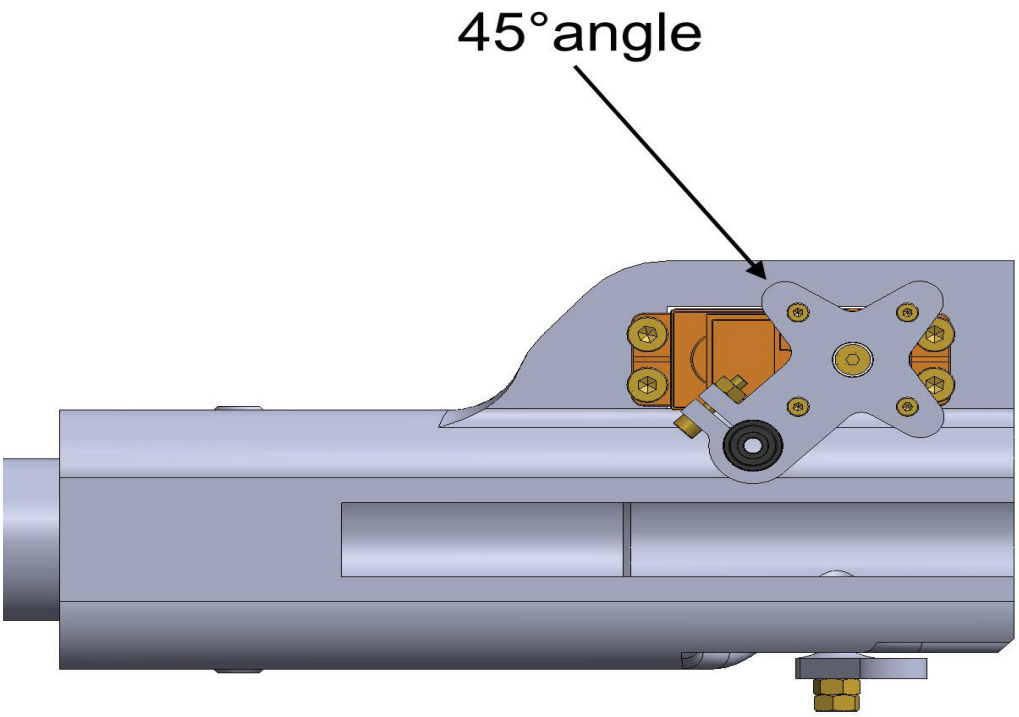

Attach 02-12 subassembly to MG995 servo.
Secure with servo screw.
Default angle for the servo arm is 45°.

Chapter 02 - Cannon

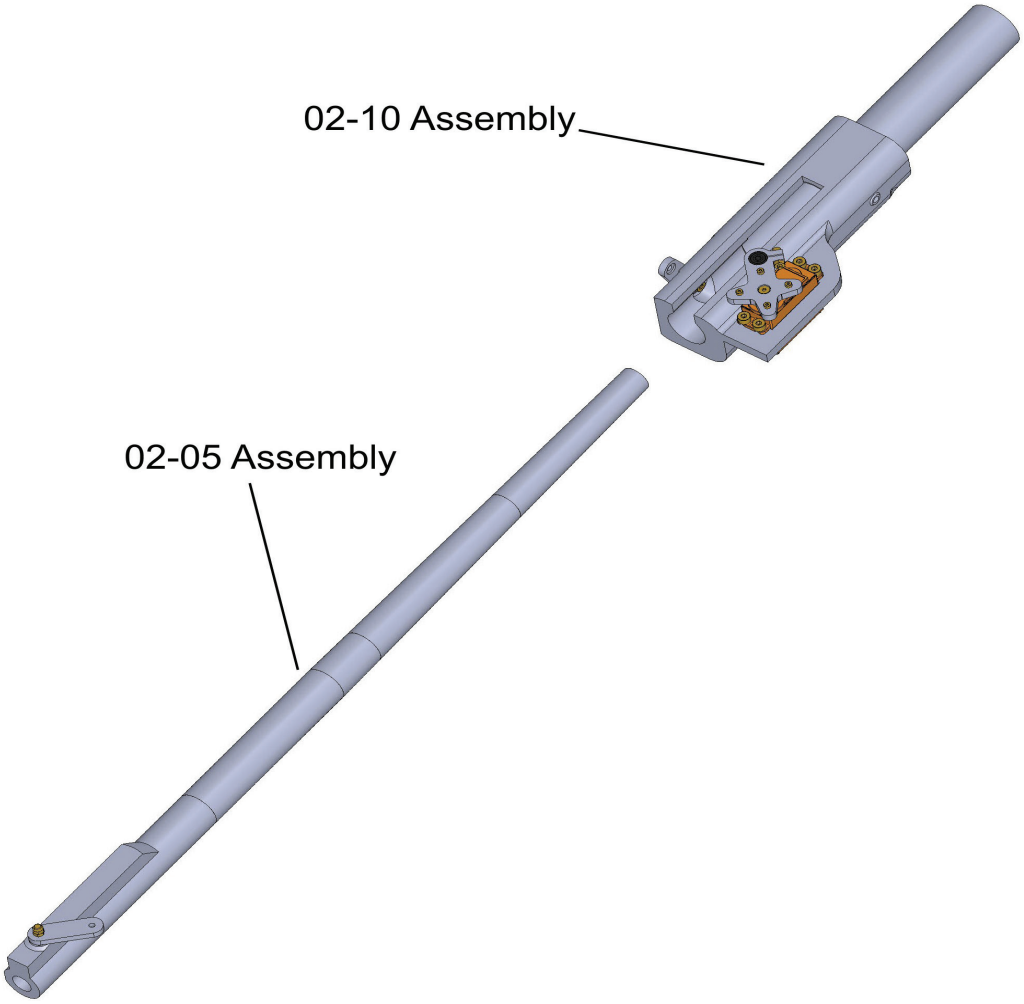

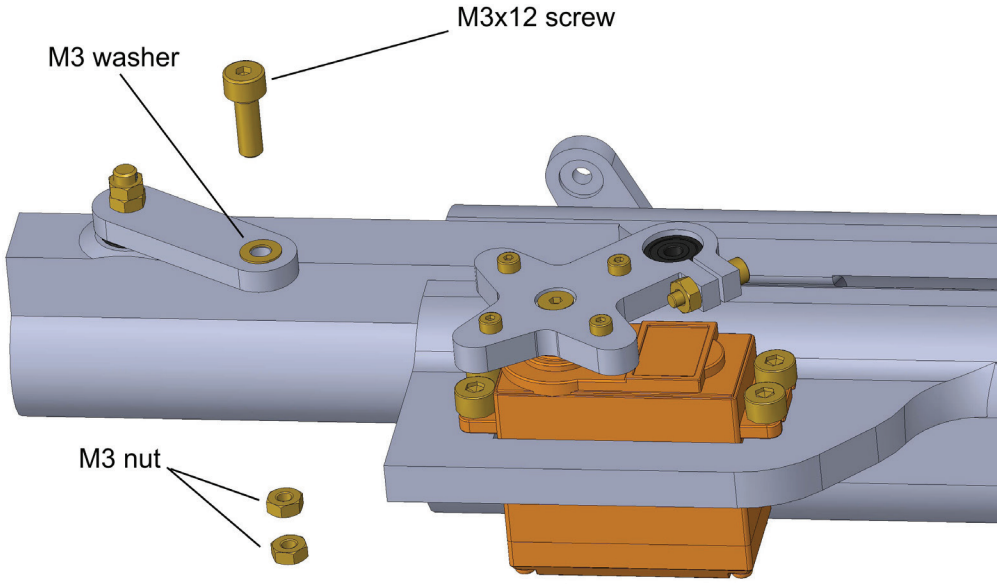

Insert the 02-05 parts subassembly into the 02-10 subassembly.
Insert M3x12 screw into part 02-09.Insert M3 washer between part 02-09 and bearing.
Secure with two M3 nuts.
This connects the subassemblies together.

Chapter 02 - Cannon

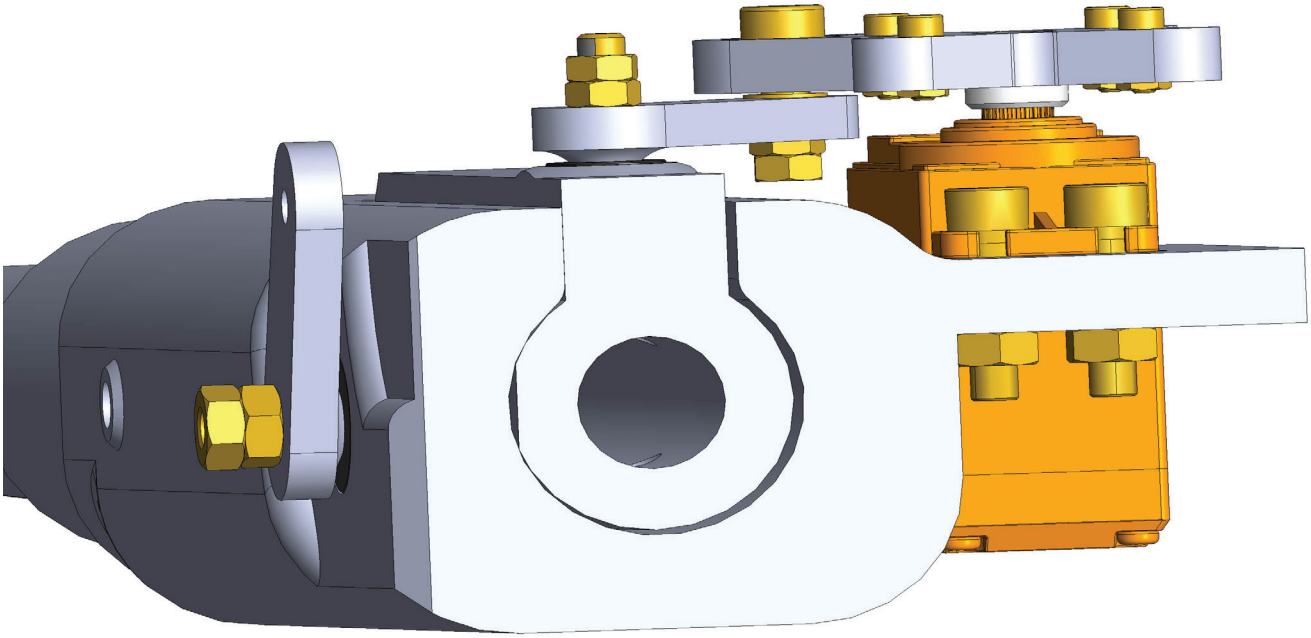

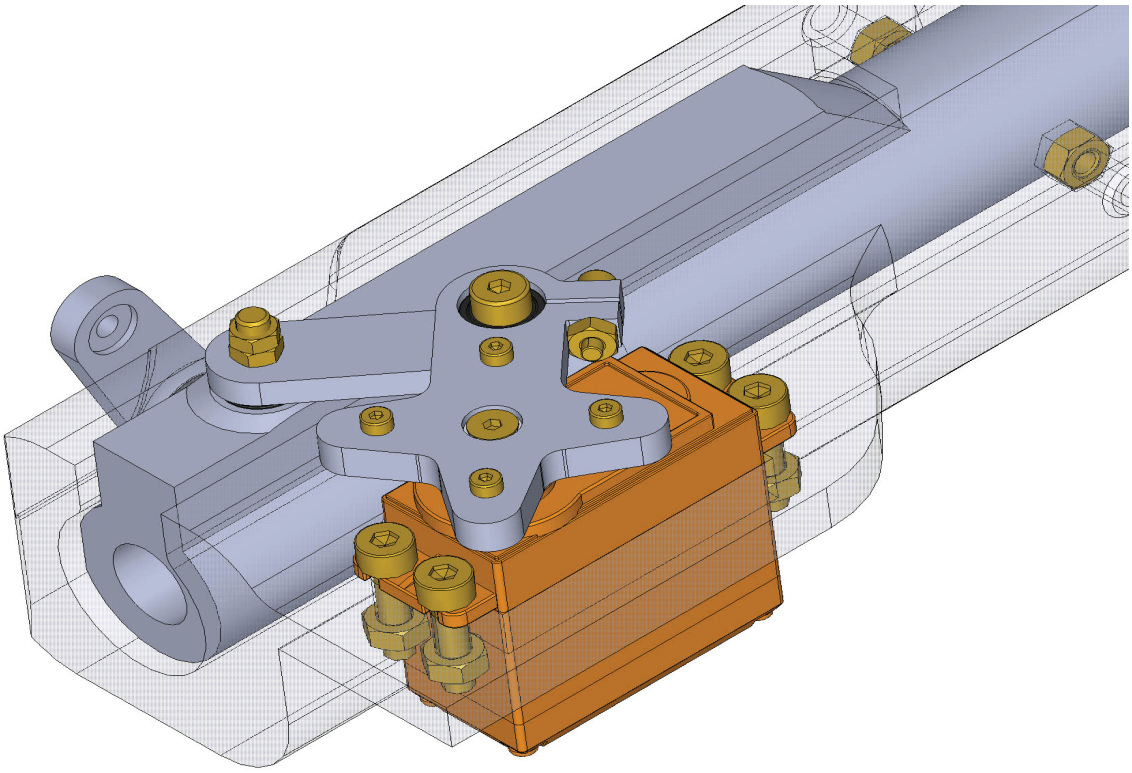

Correct position of the servo arm.

Chapter 02 - Cannon

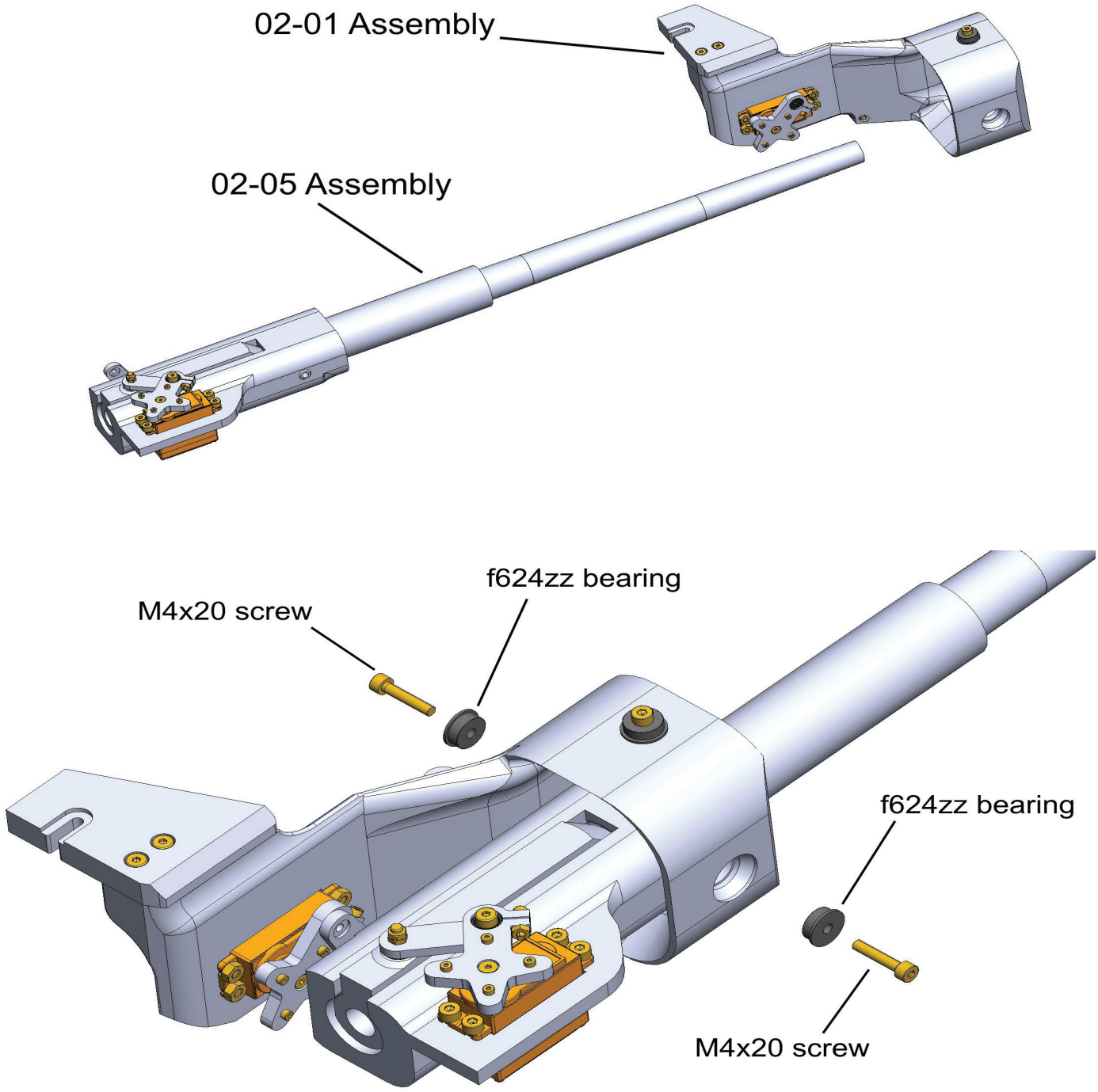

Insert the 02-05 parts subassembly into the 02-01 subassembly.
Insert two f624zz bearings into part 02-01 using M4x20 screws.
This connects the subassemblies together. The bearings must rotate freely.

Chapter 02 - Cannon

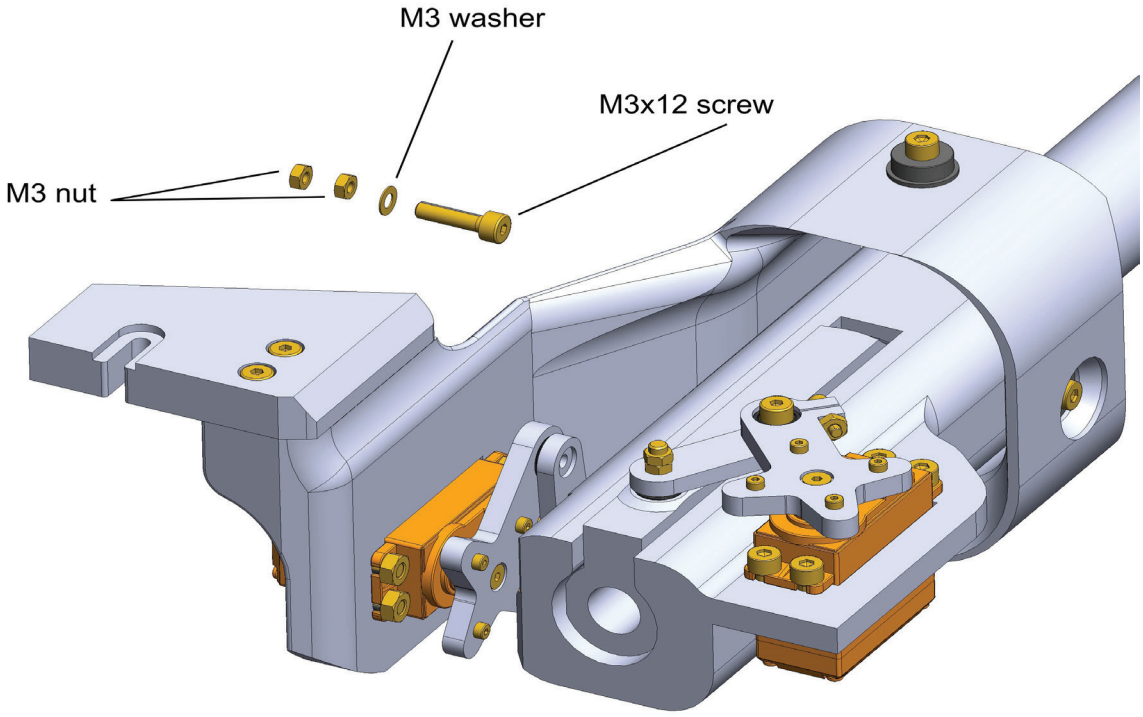

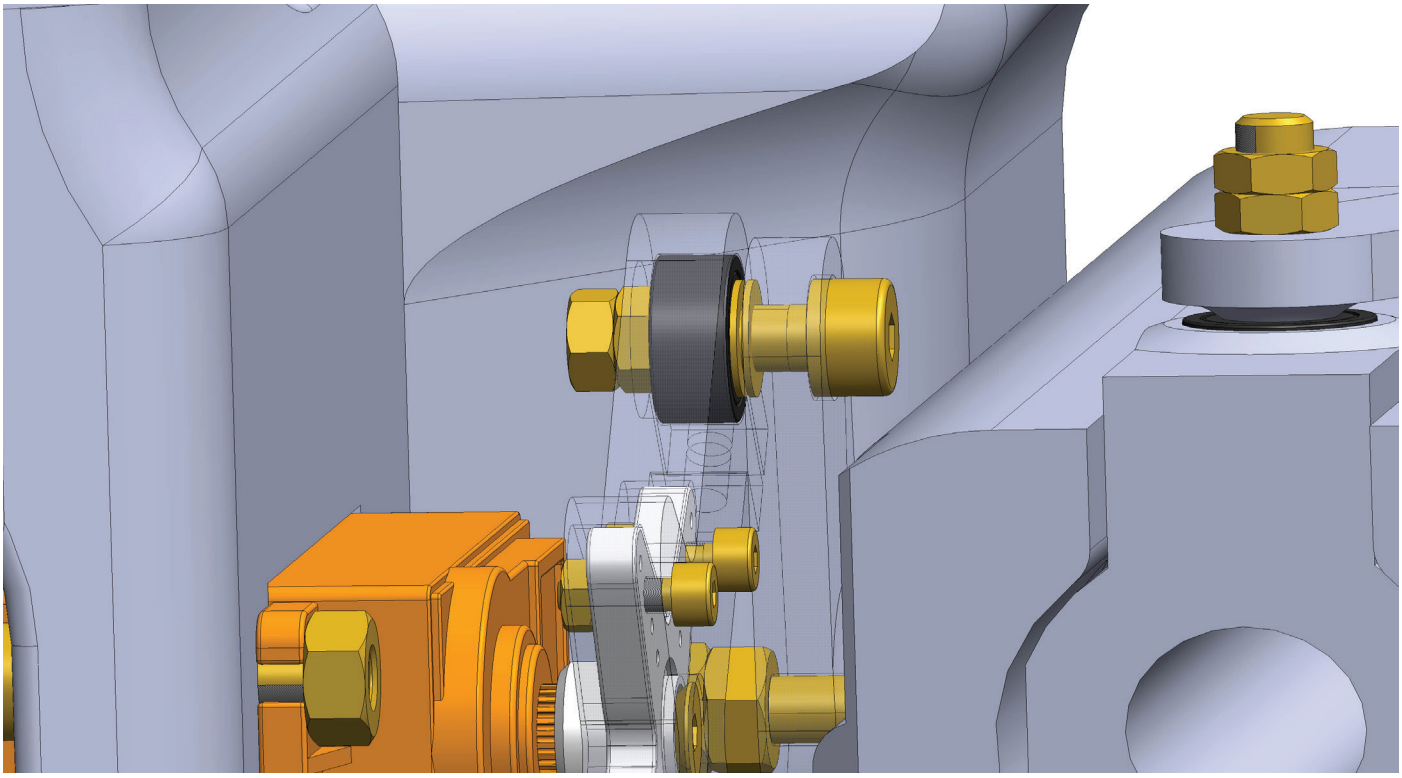

Insert M3x12 screw into part 02-11.Insert M3 washer between part 02-11 and bearing.
Secure with two M3 nuts.
Nuts and bolts cannot loosen.
When released, there is a risk of damage to the model !!!

Chapter 02 - Cannon

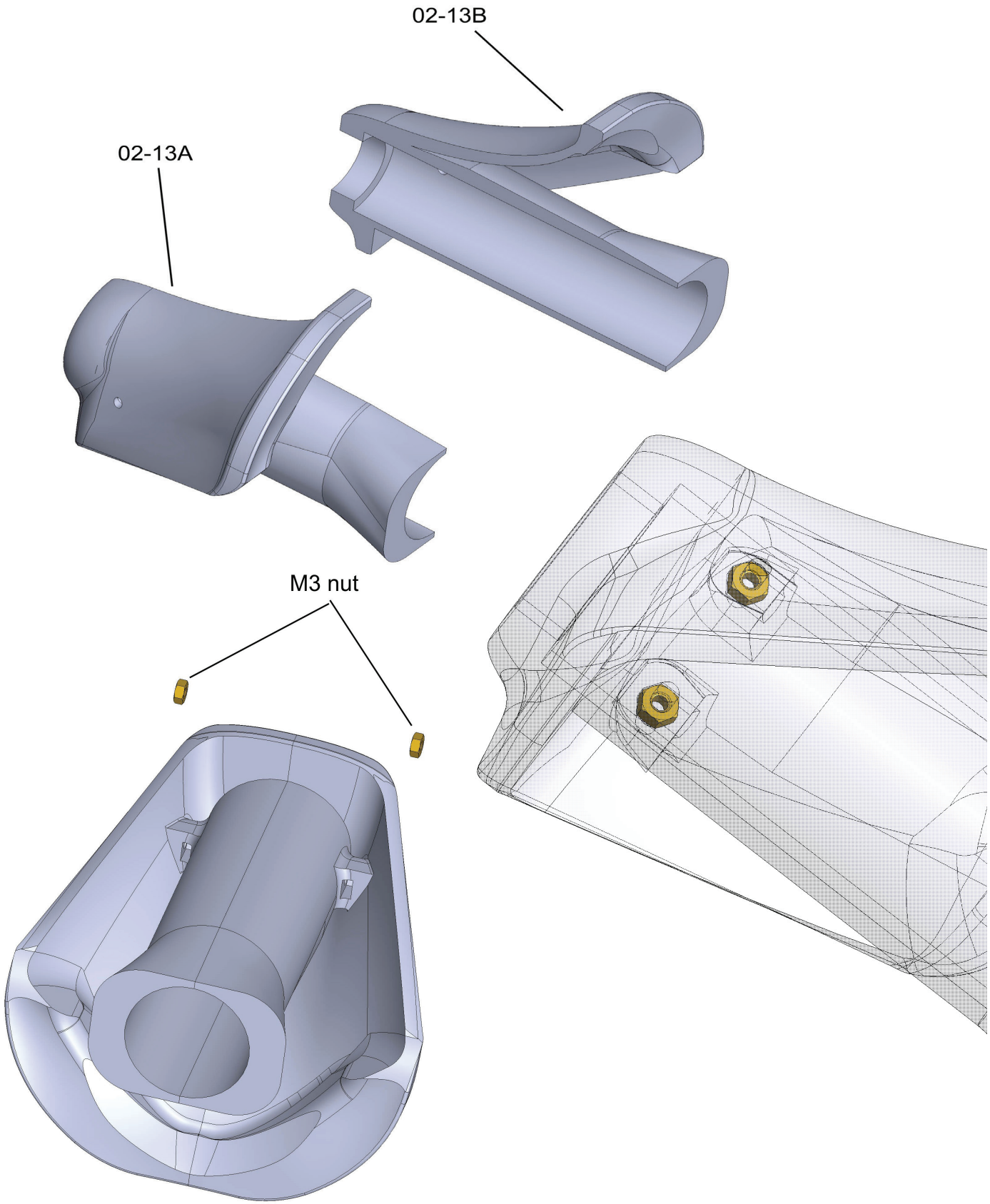

Glue parts 02-13A and 02-13B together.
Insert two M3 nuts.

Chapter 02 - Cannon

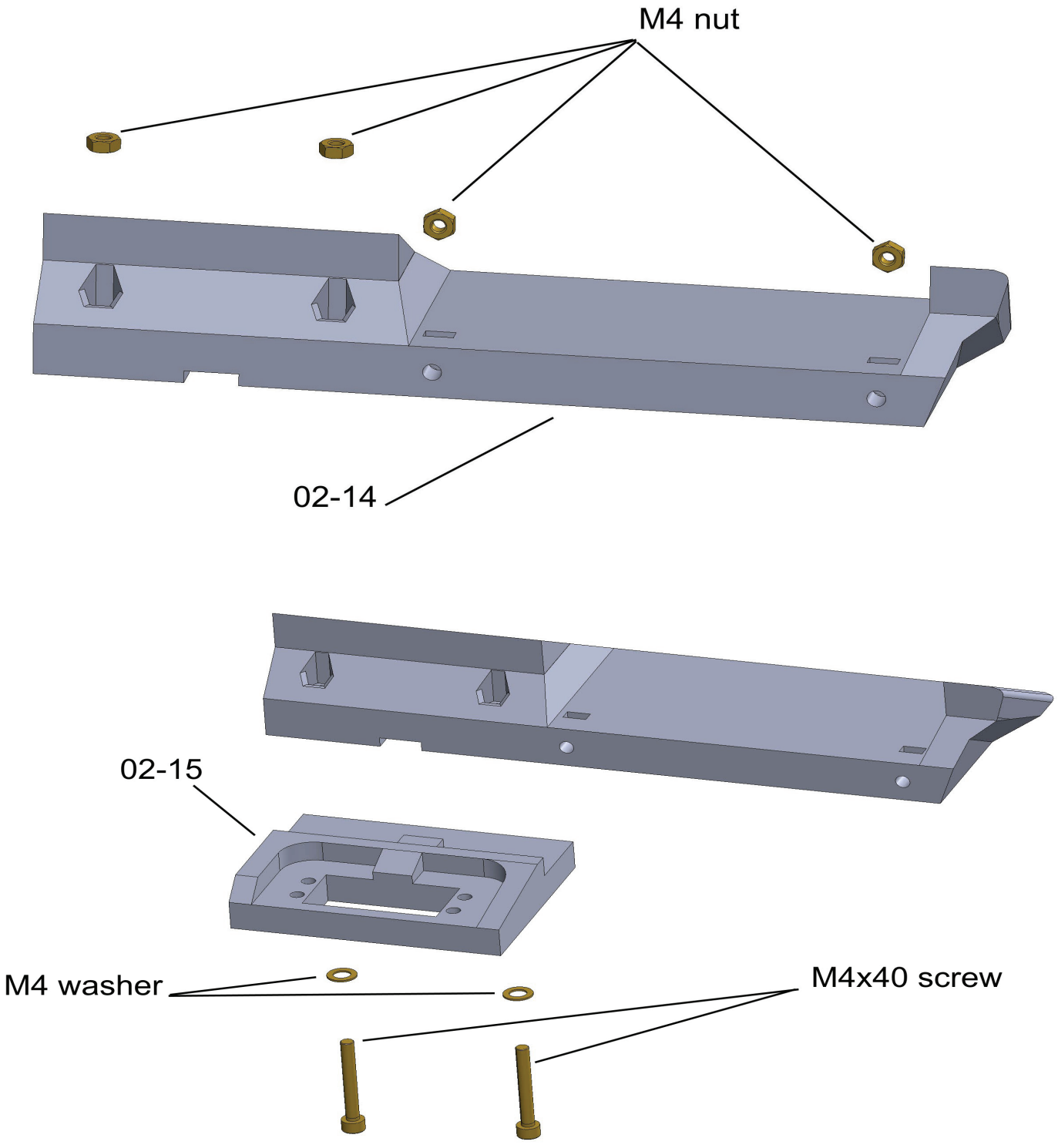

Insert 4 M4 nuts into the holes in part 02-14.
Attach parts 02-15 to part 02-14 using an M4x40 screws and washers.

Chapter 02 - Cannon

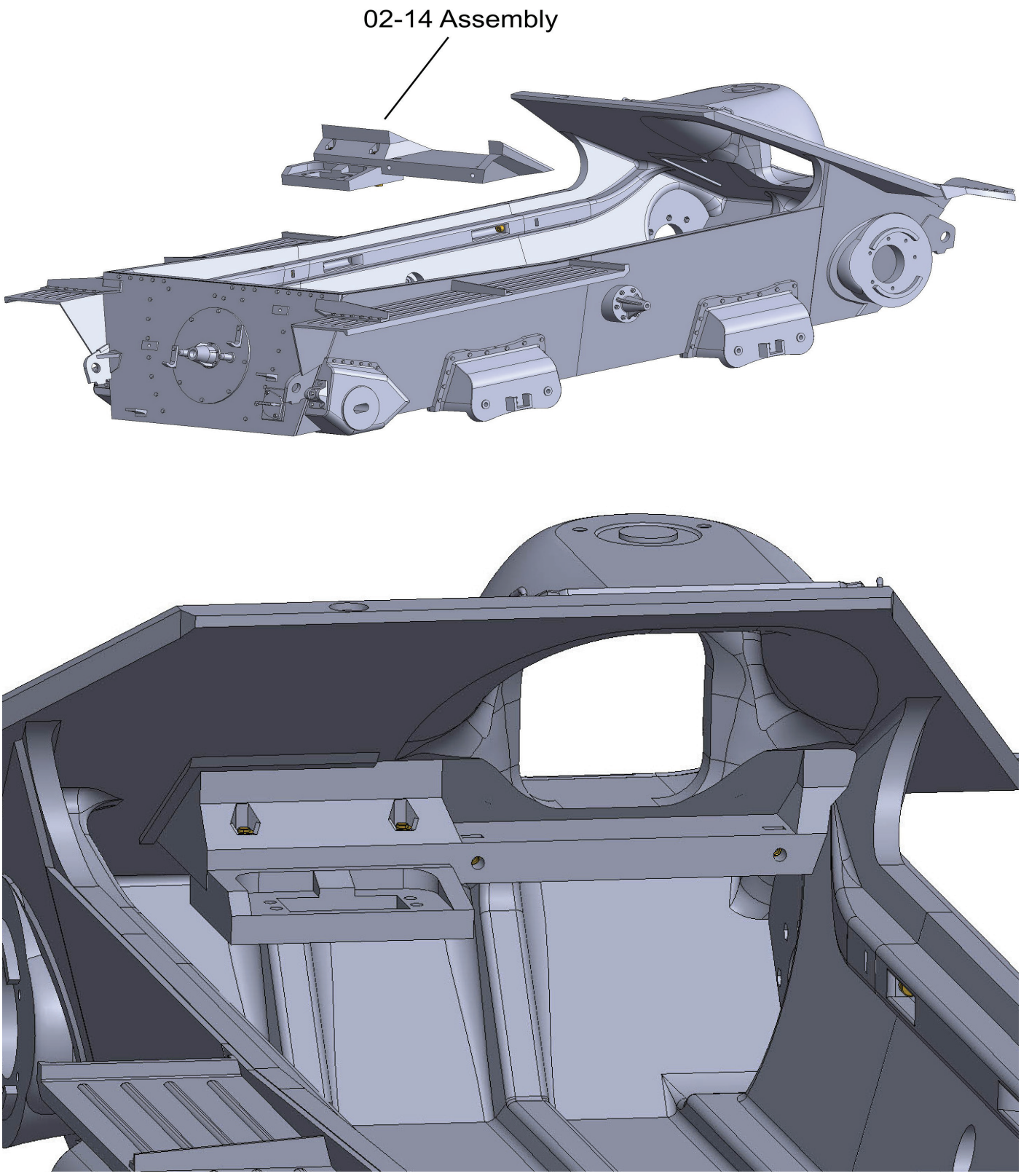

Glue subassembly 02-14 together with part 01-01.

Chapter 02 - Cannon

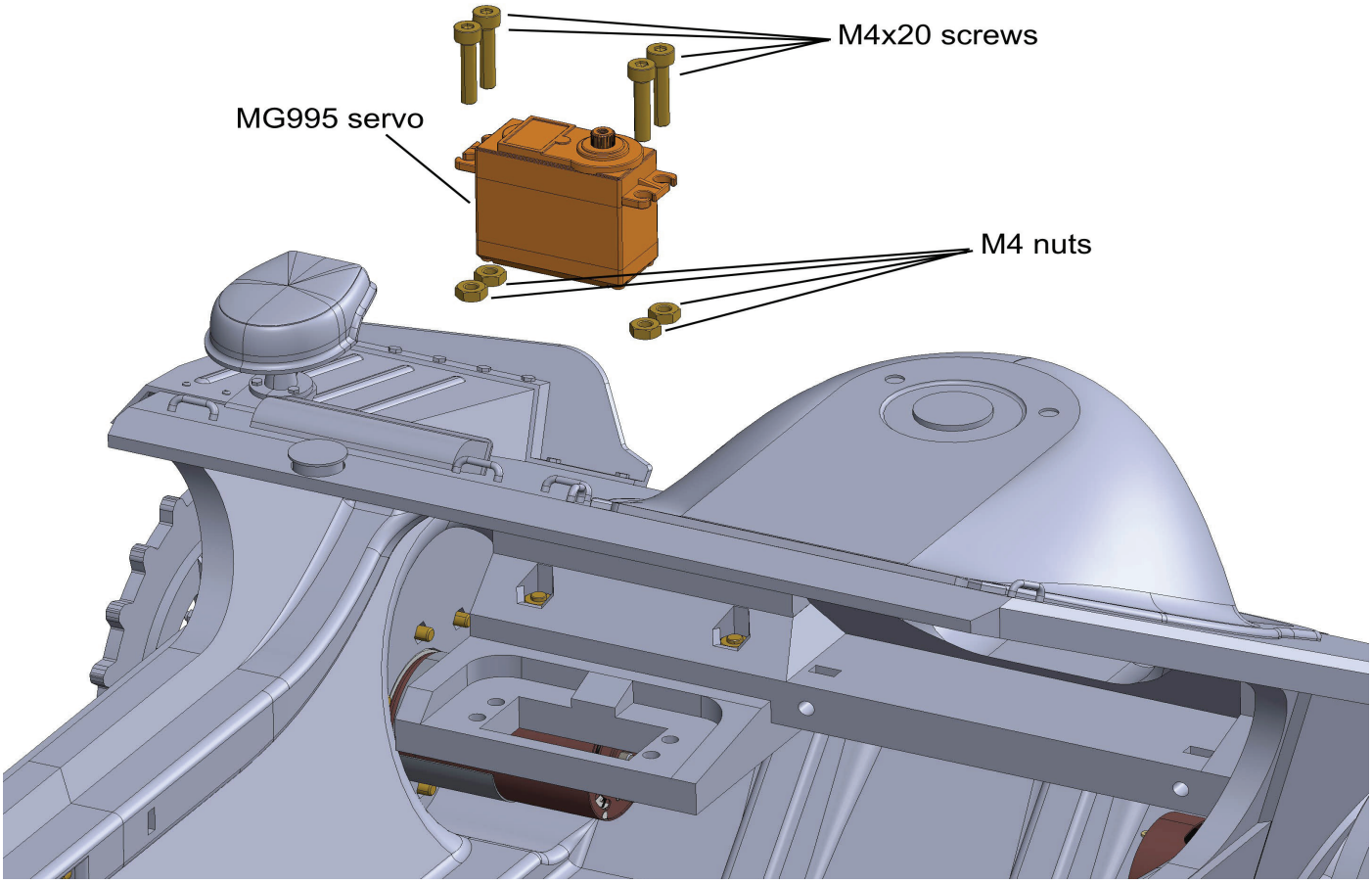

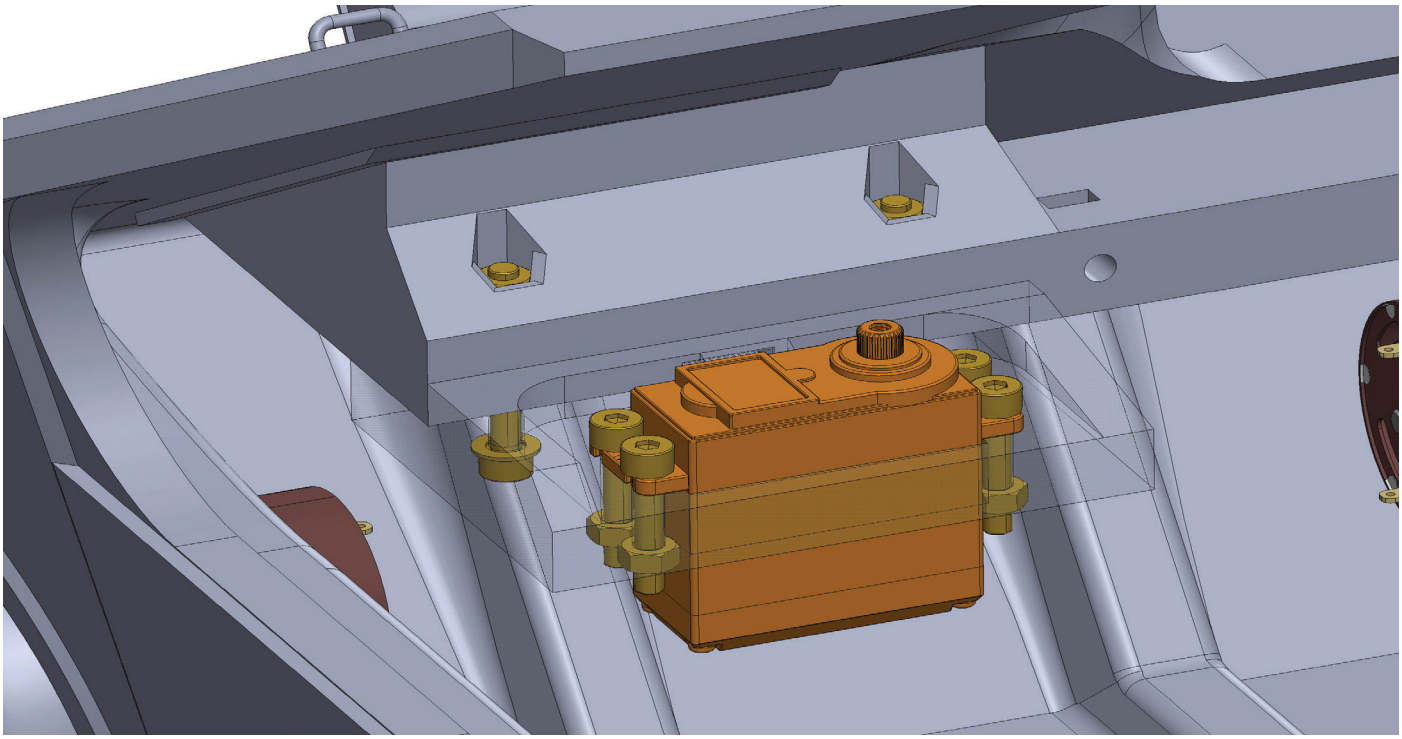

Connect the MG995 servo. Use an M4x16 screws and four M4 nuts.

Chapter 02 - Cannon

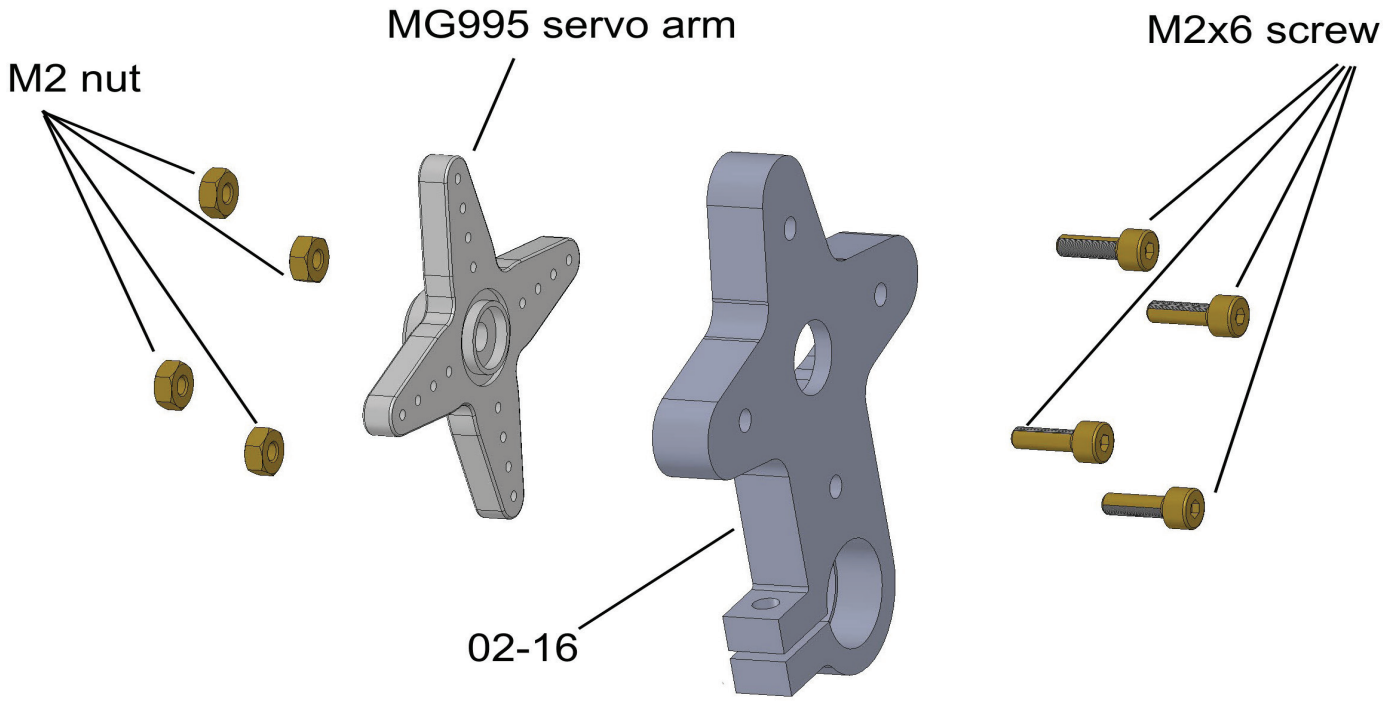

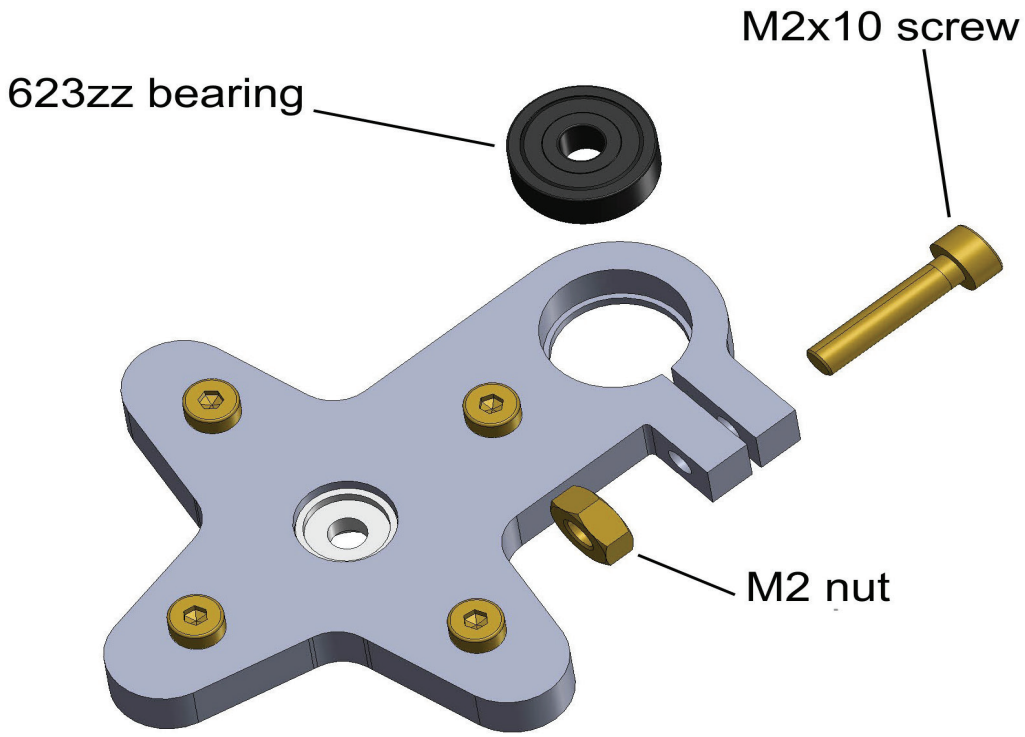

Attach part 02-16 to the MG995 servo arm.
Secure with four M2x6 screws and M4 nuts.Use drill if needed.
Put 623zz bearing into the part 02-16.
Secure with M2x10 screw and M2 nut.

Chapter 02 - Cannon

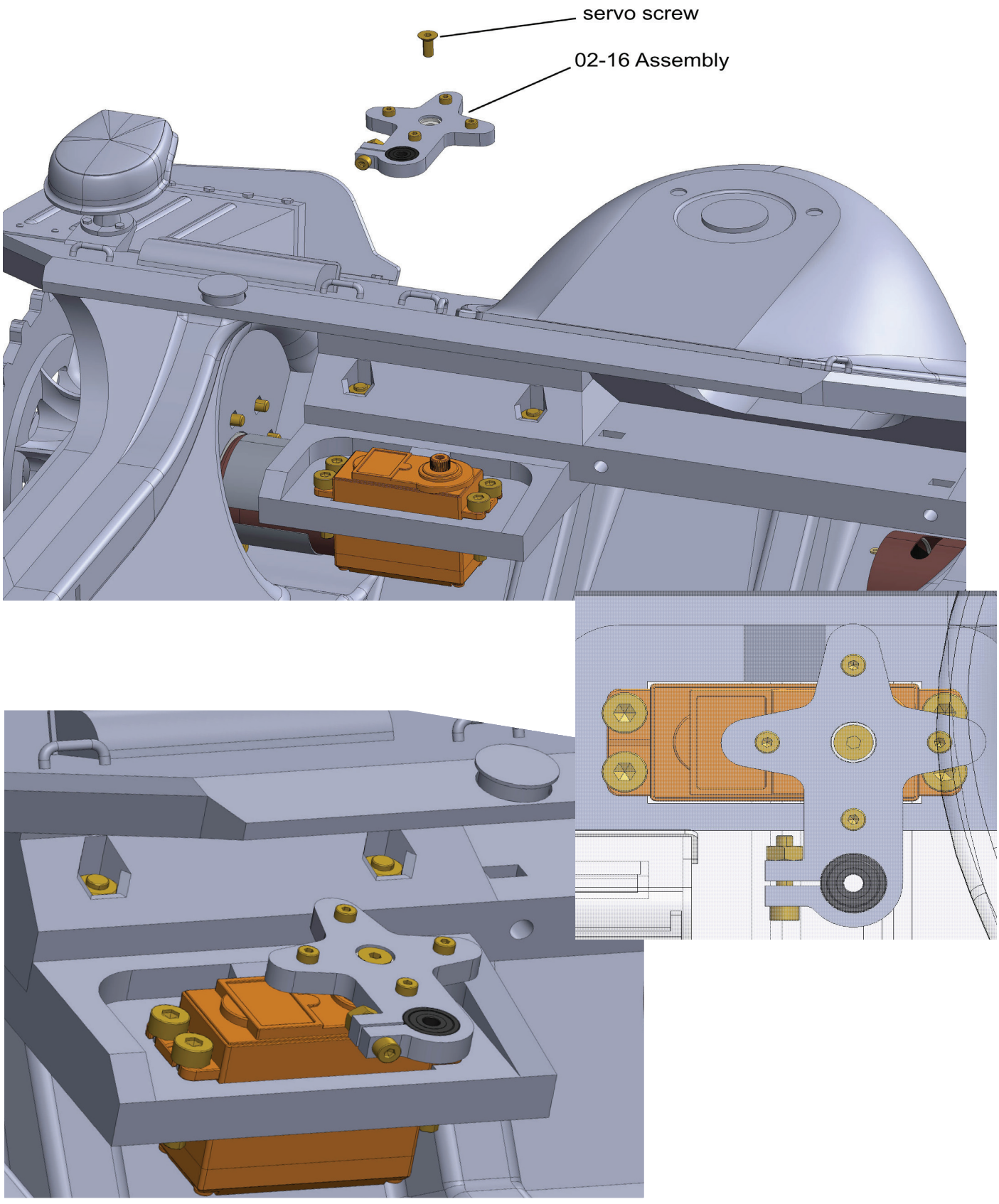

Attach 02-16 subassembly to MG995 servo.
Secure with servo screw.

Chapter 02 - Cannon

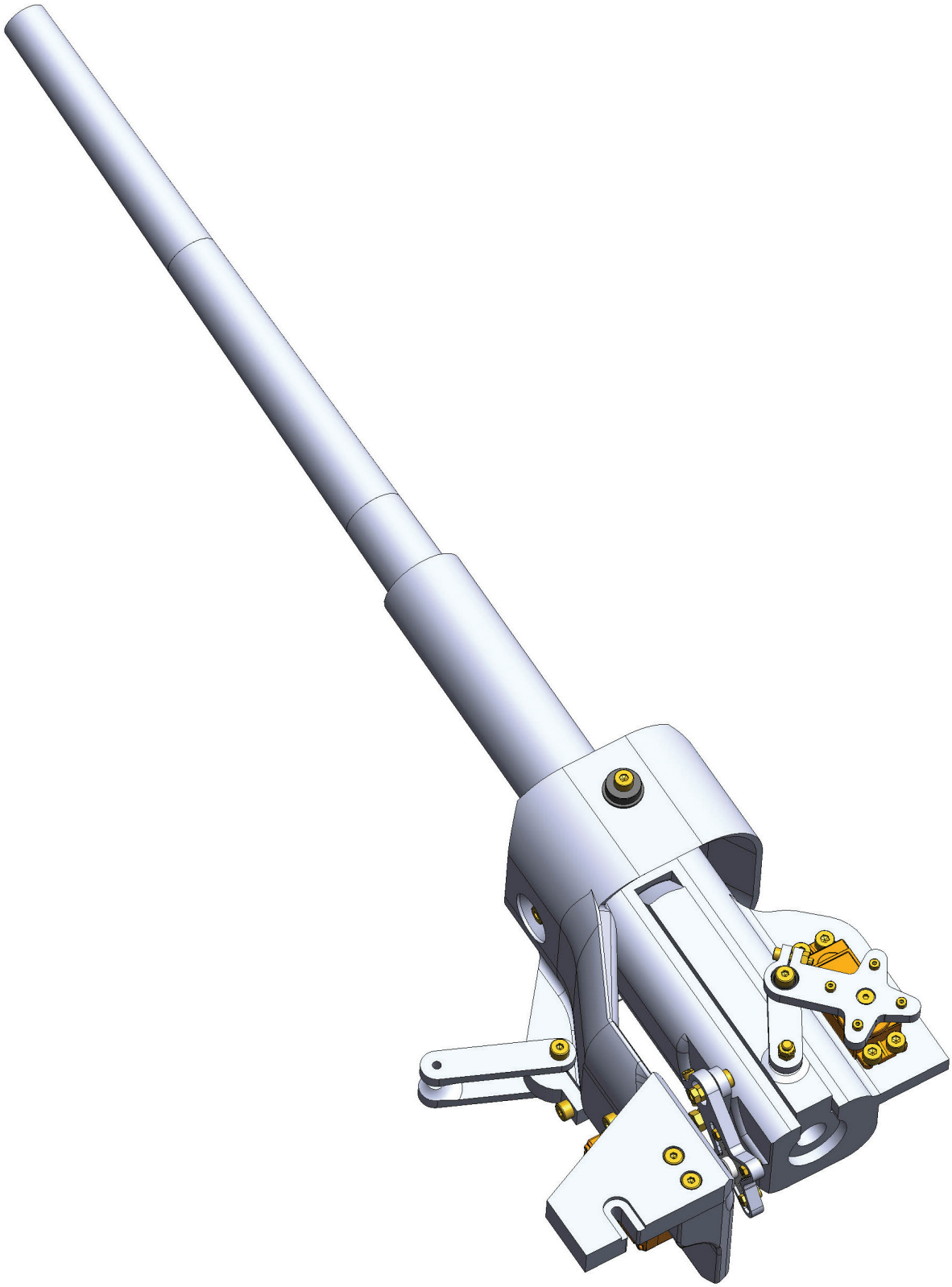

Check Cannon.

Before installing the cannon in the vehicle, make sure the cannon is assembled exactly according to instructions and all screws on the servos are secured against loosening!!!

Chapter 02 - Cannon

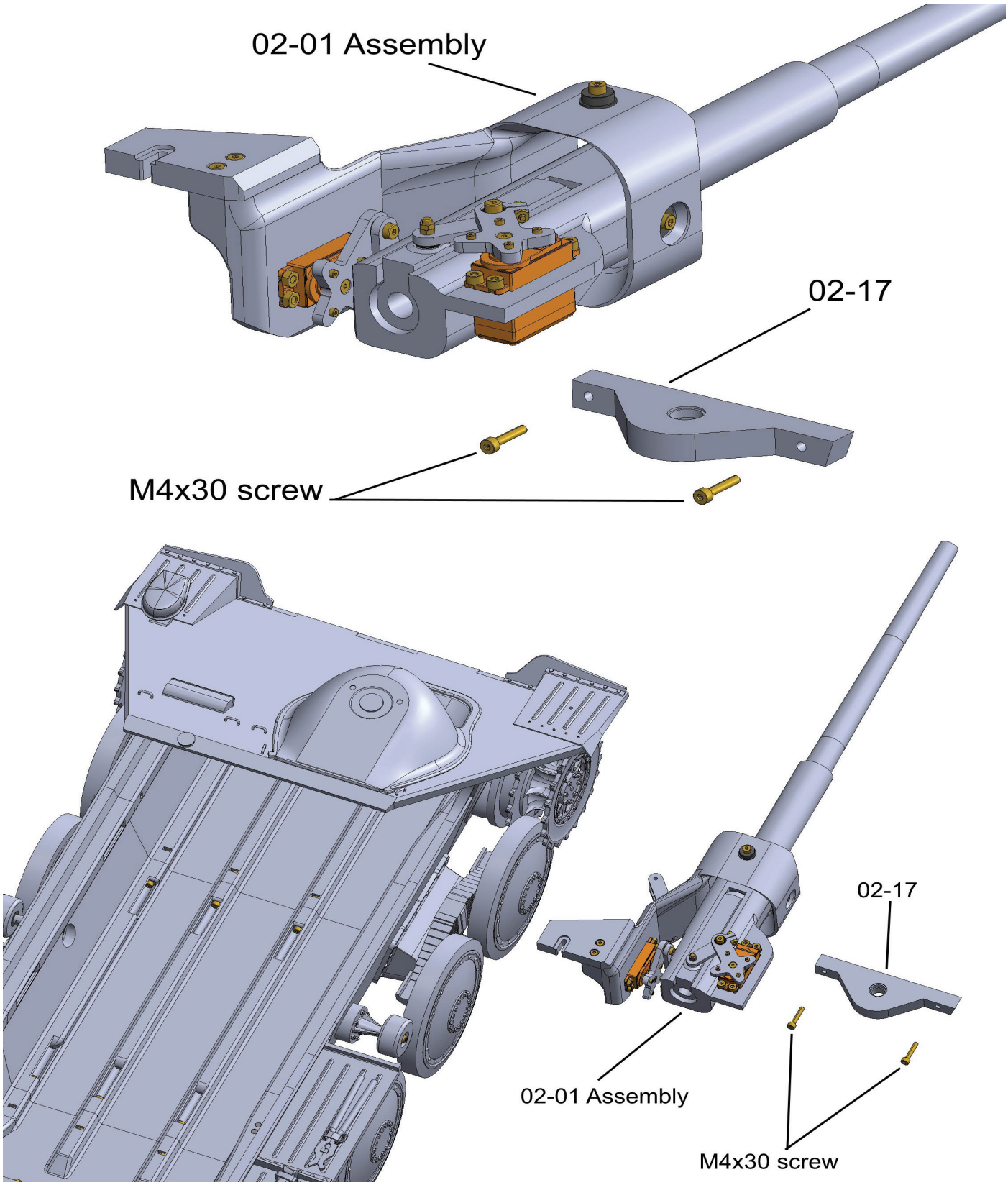

Attach the cannon with part 02-17 and two M4x30 screws to part 01-01.

Chapter 02 - Cannon

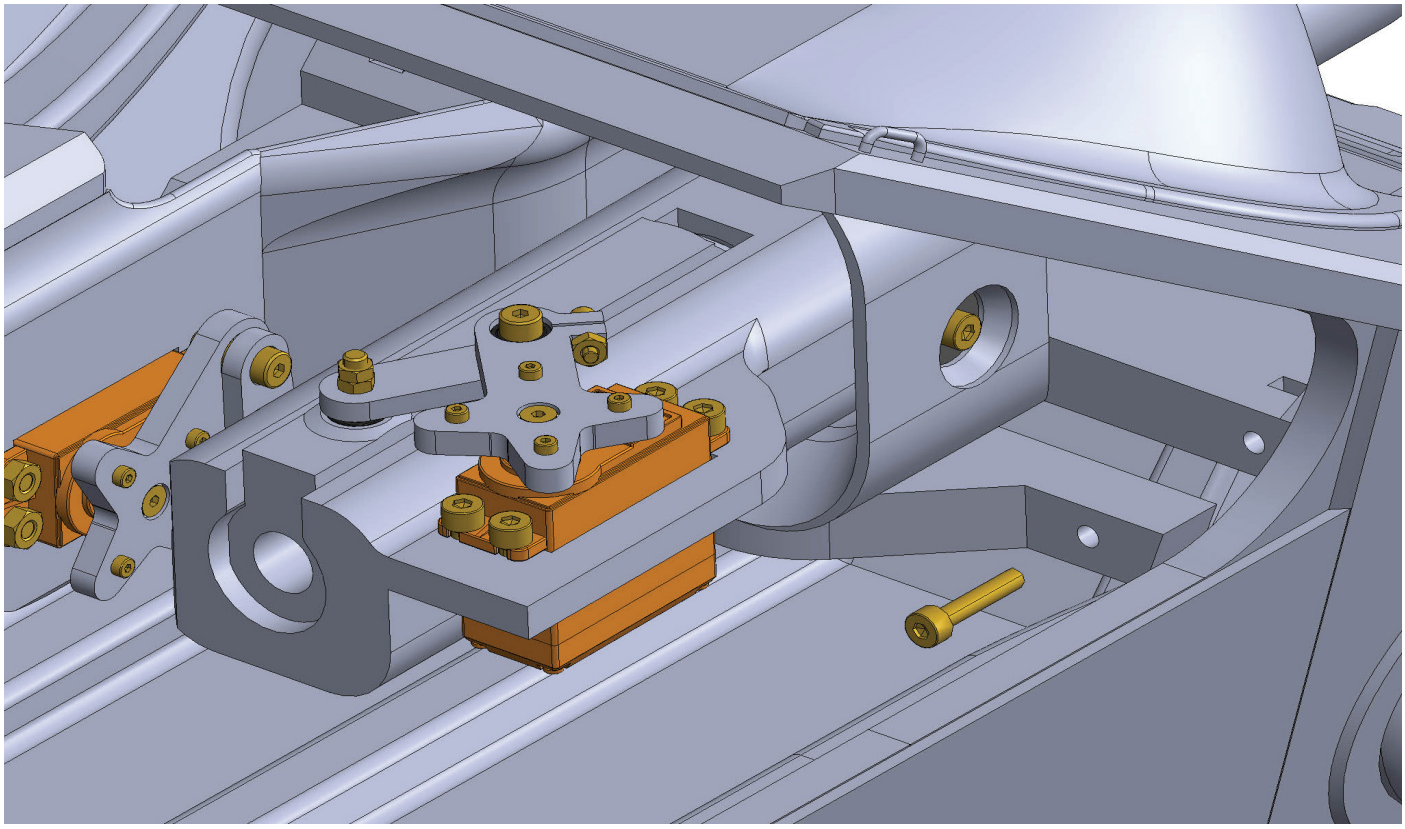

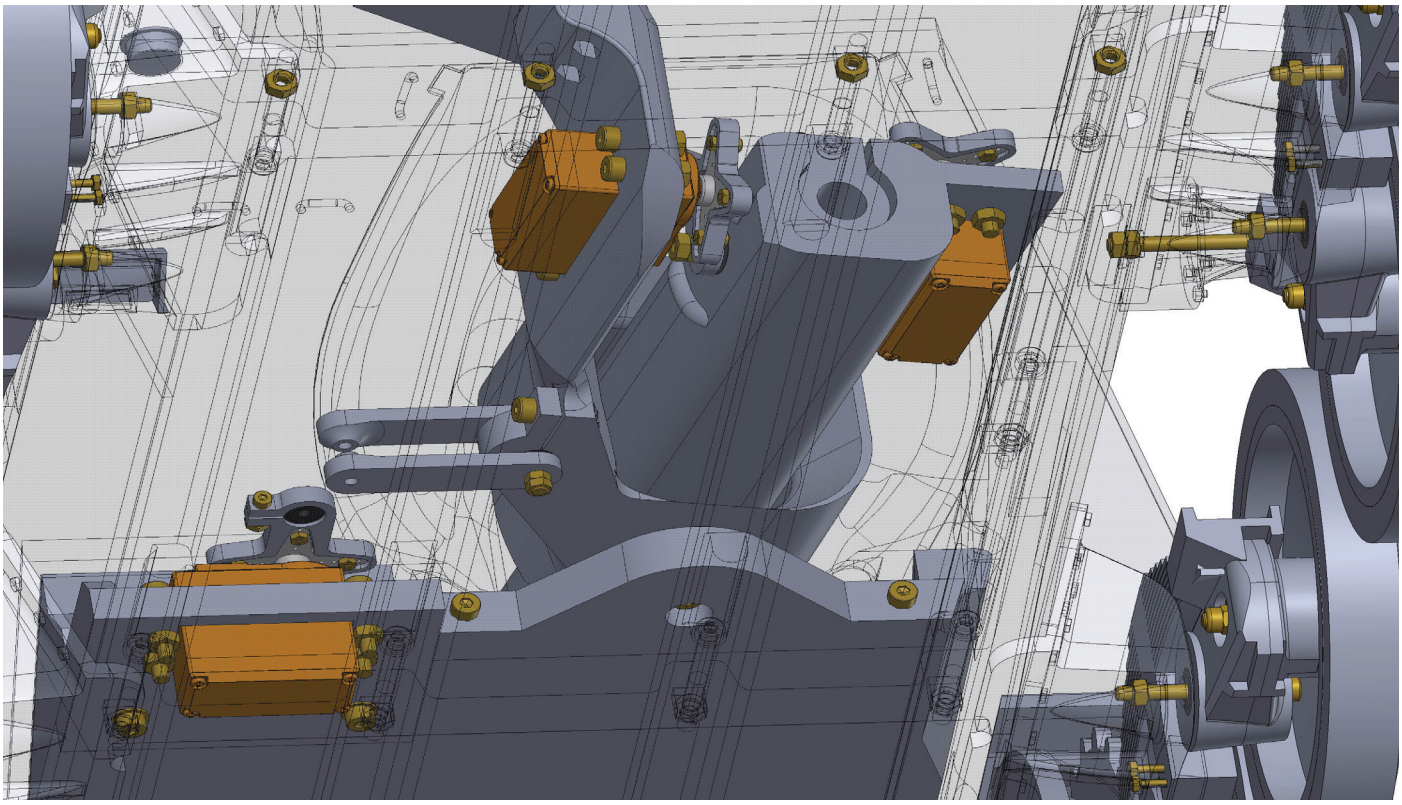

Additive views for better installation orientation.

Chapter 02 - Cannon

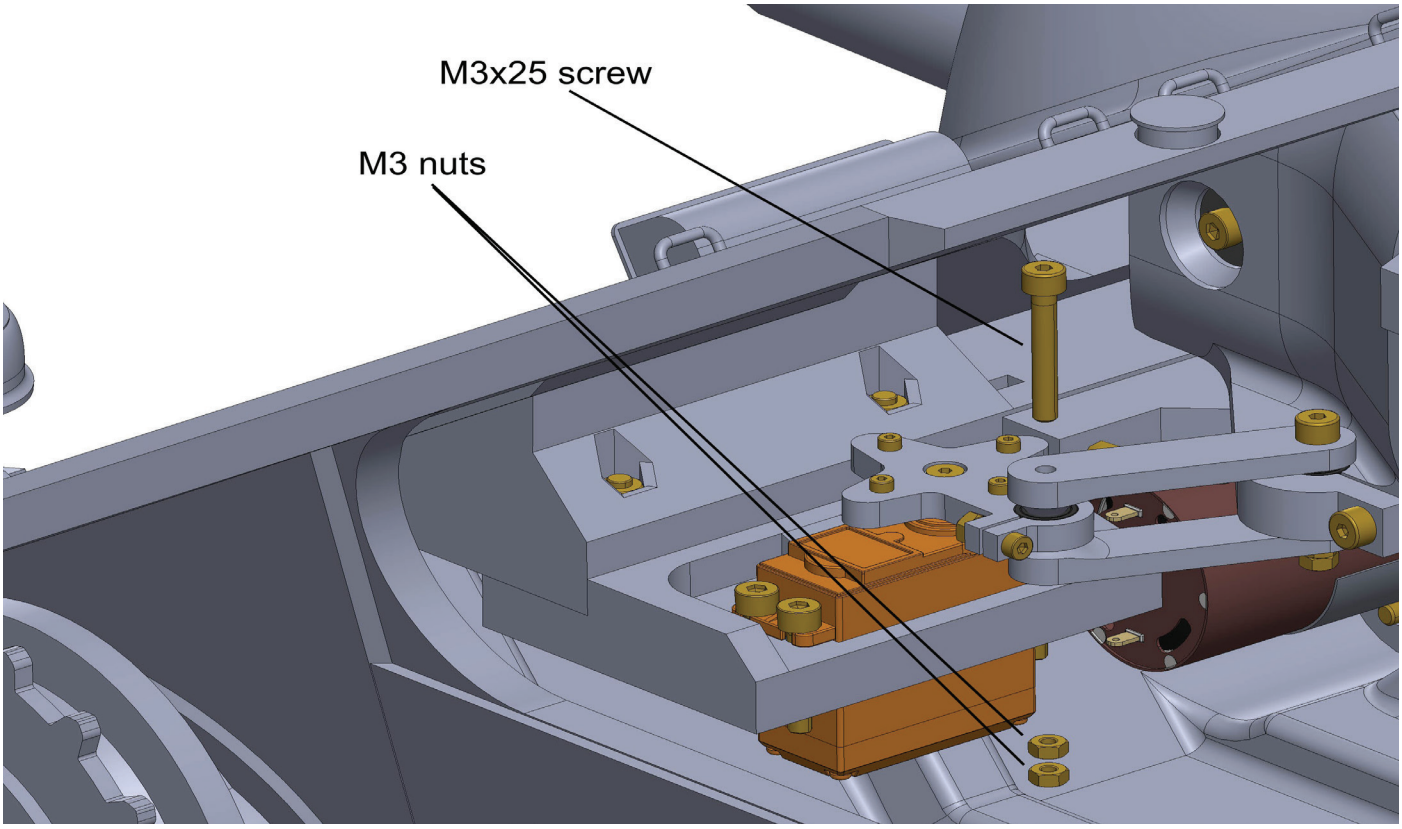

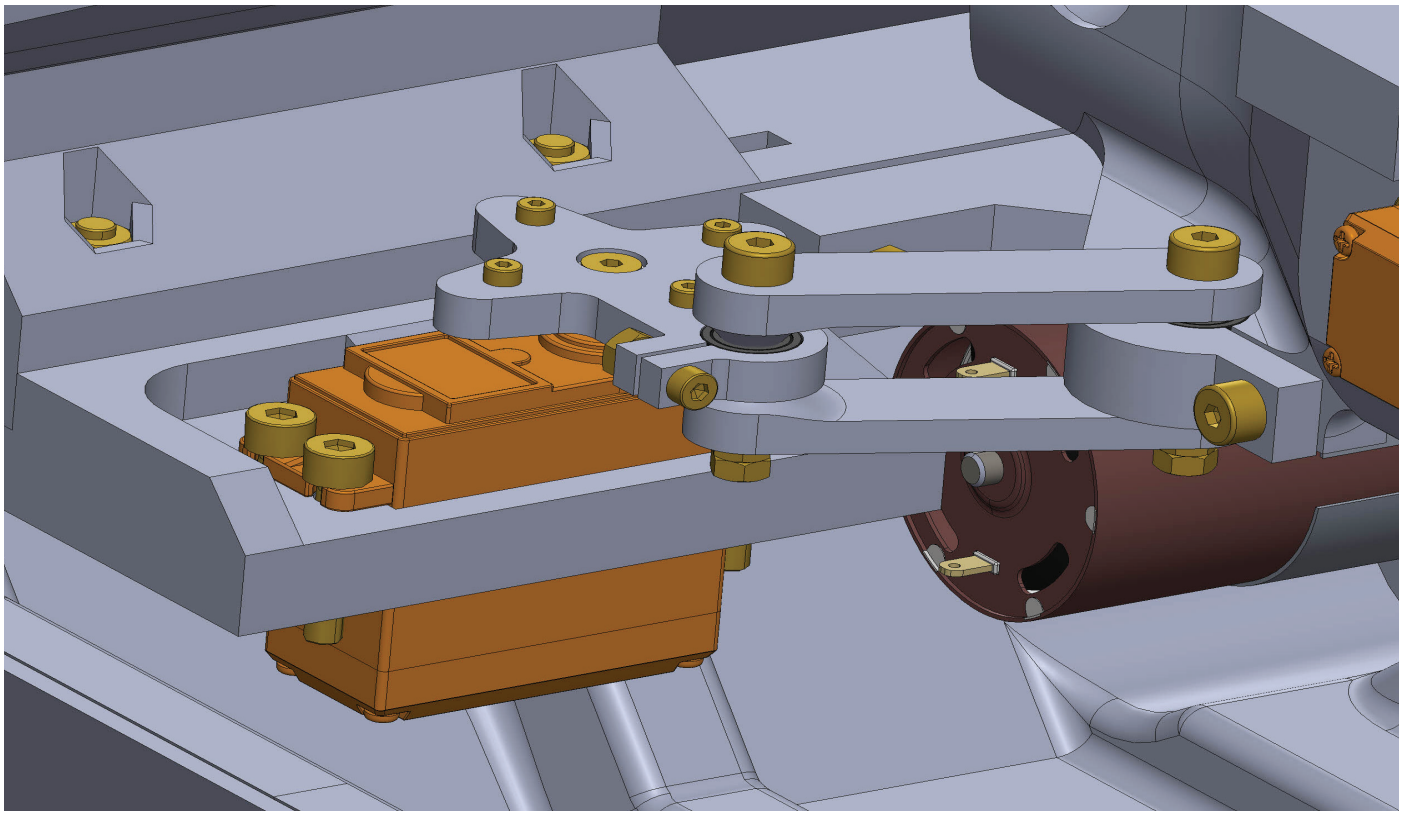

Fix the servo arm.
Use M3x25 screw and two nuts (or one self-locking).

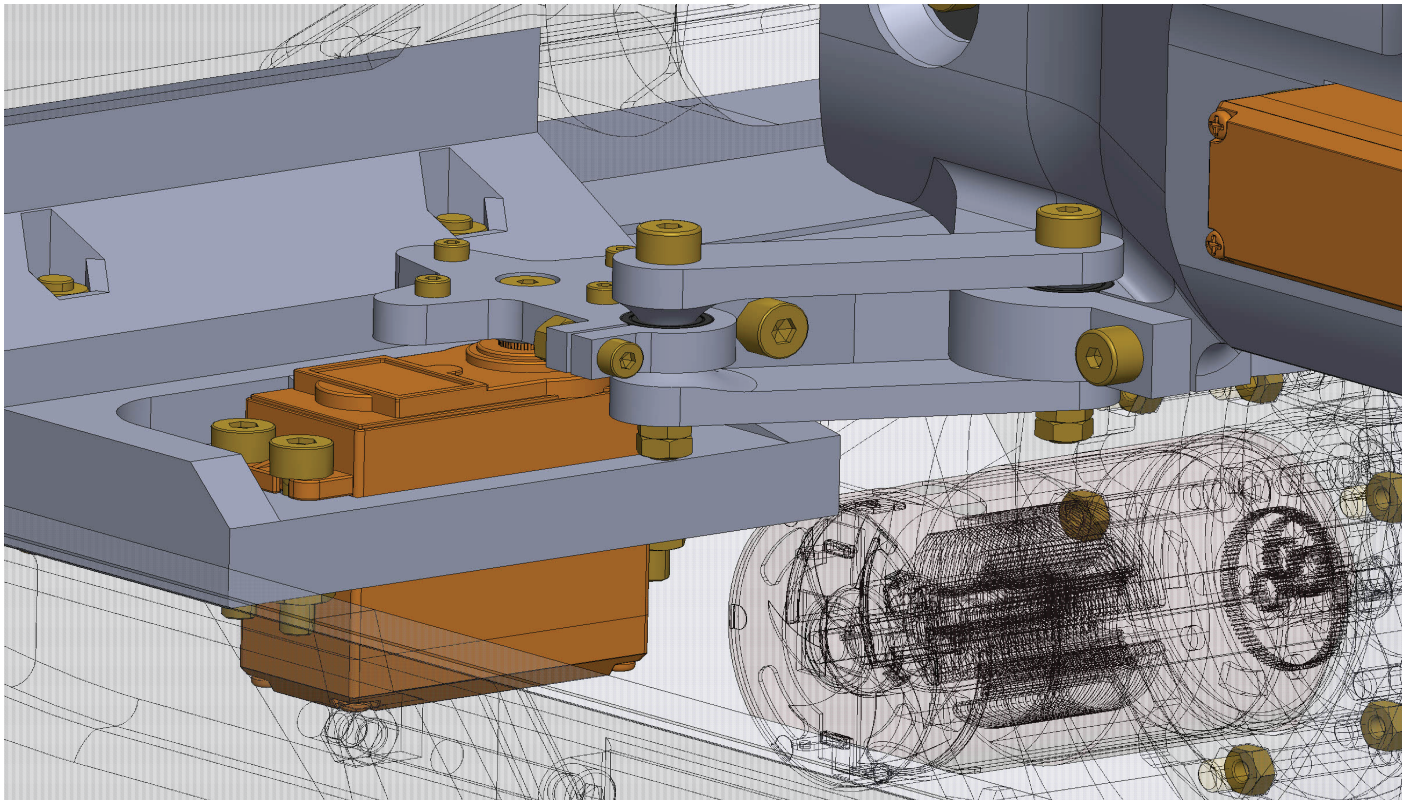

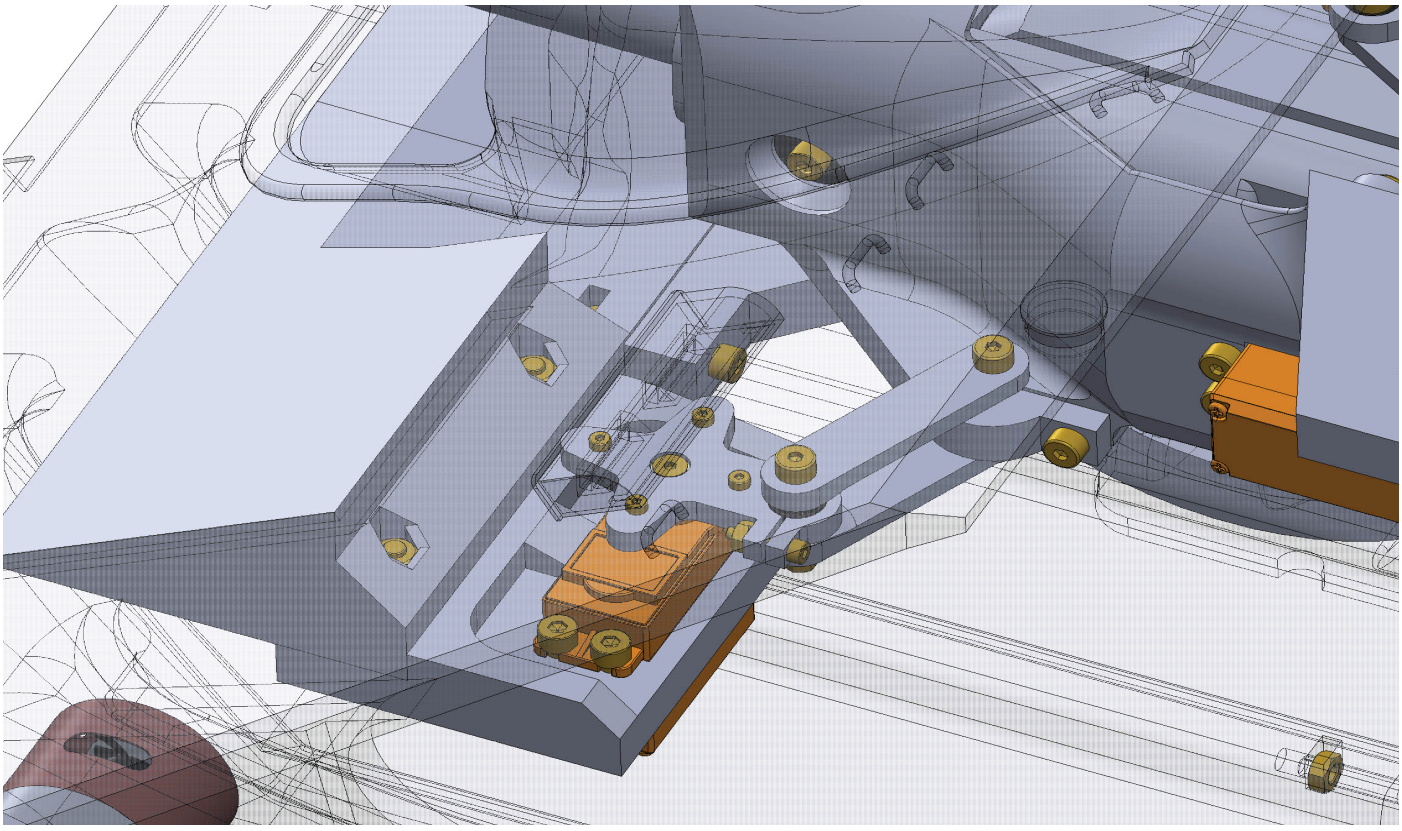

Additive views for better installation orientation.

Chapter 02 - Cannon

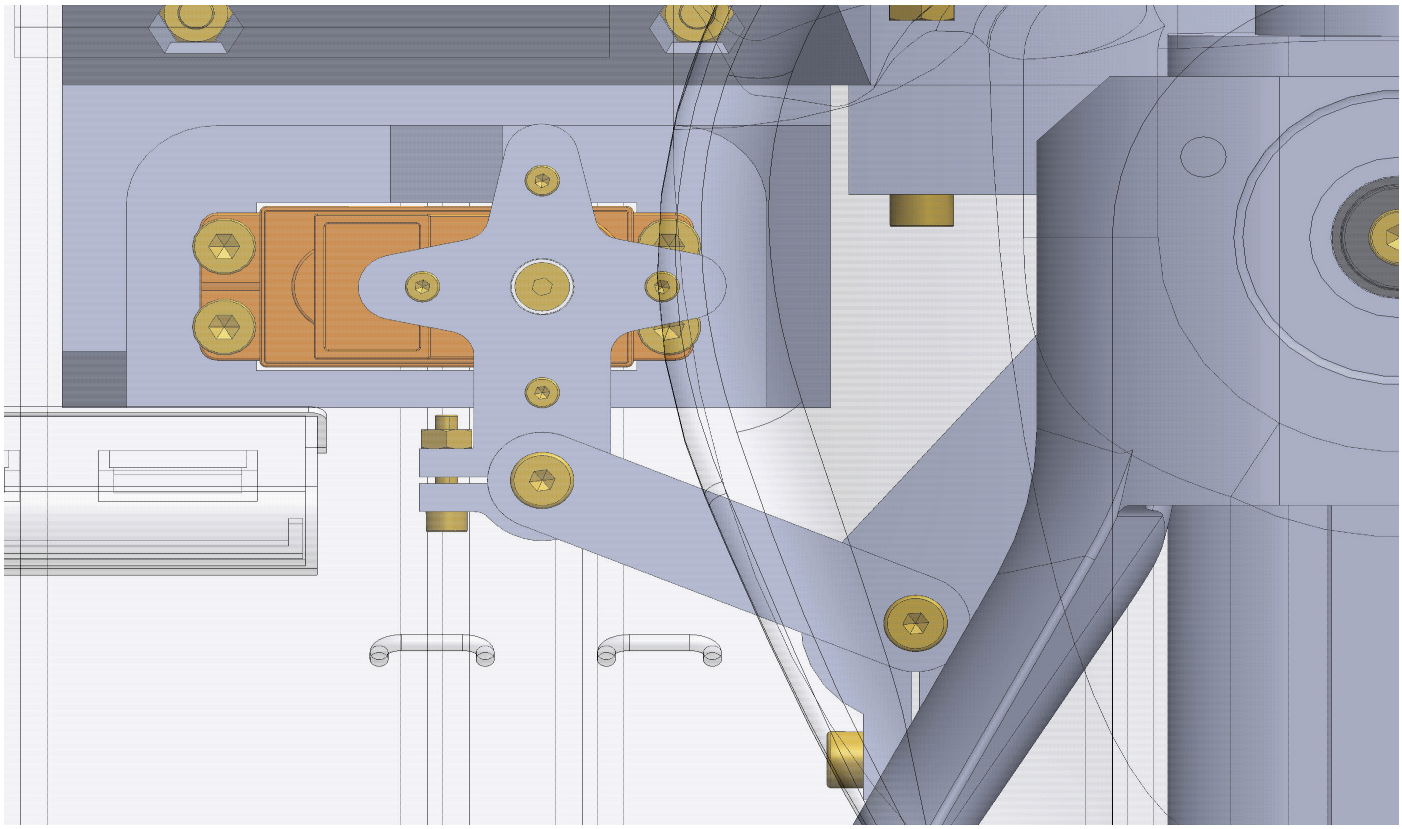

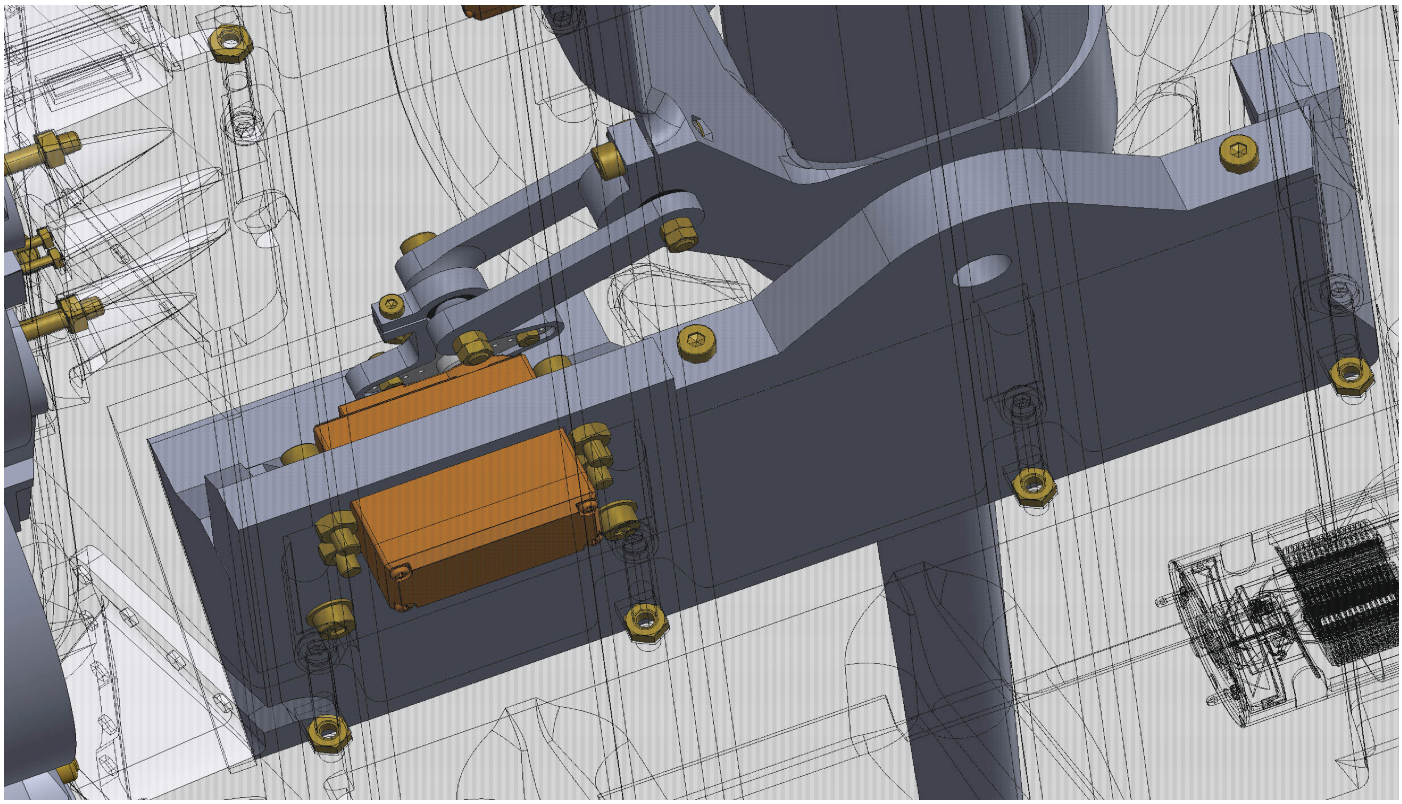

Additive views for better installation orientation.
Default angle for the servo arm is 90°.

Chapter 02 - Cannon

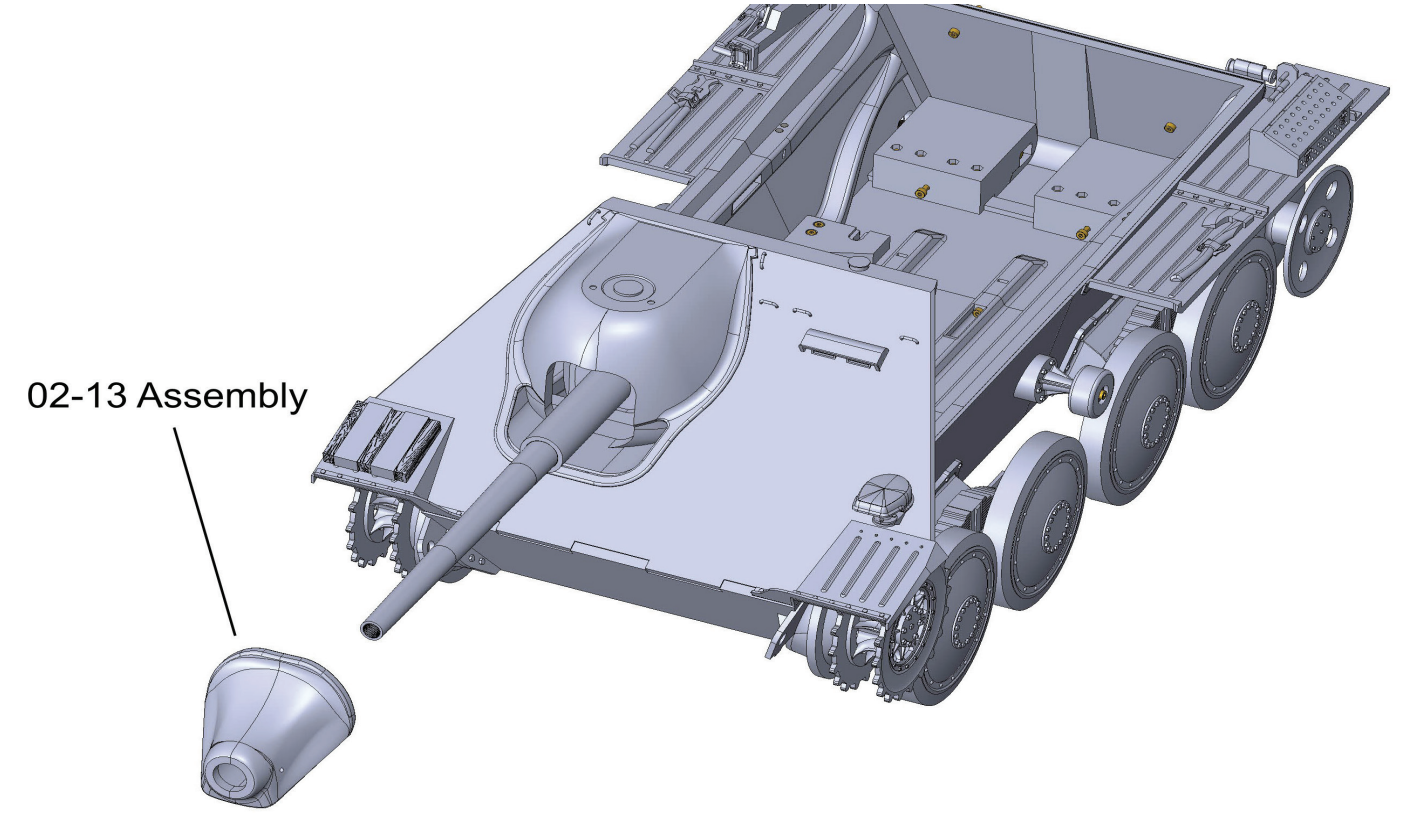

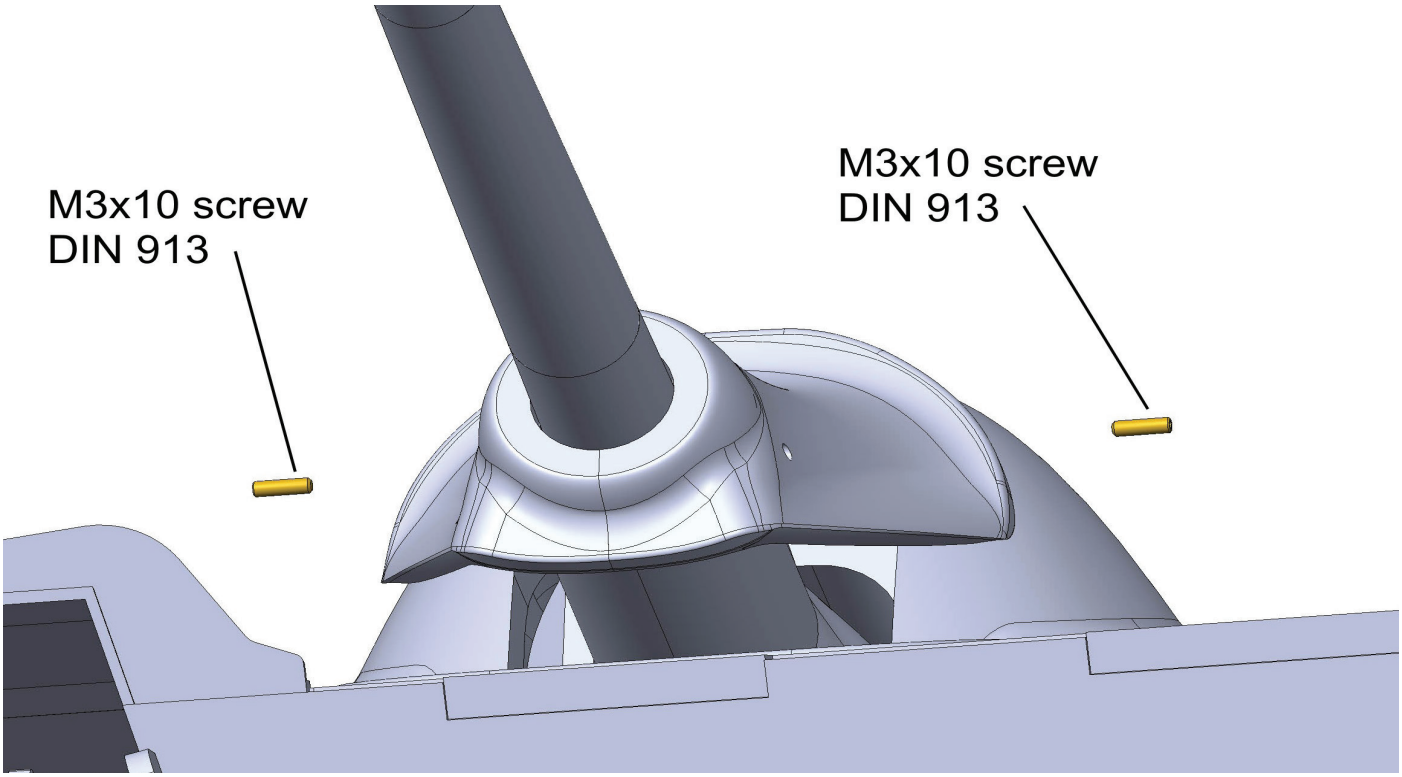

Complete the cannon installation by adding 02-13 subassembly (page 80).
Use two M3x10 screws (worm - DIN913).

Chapter 02 - Cannon

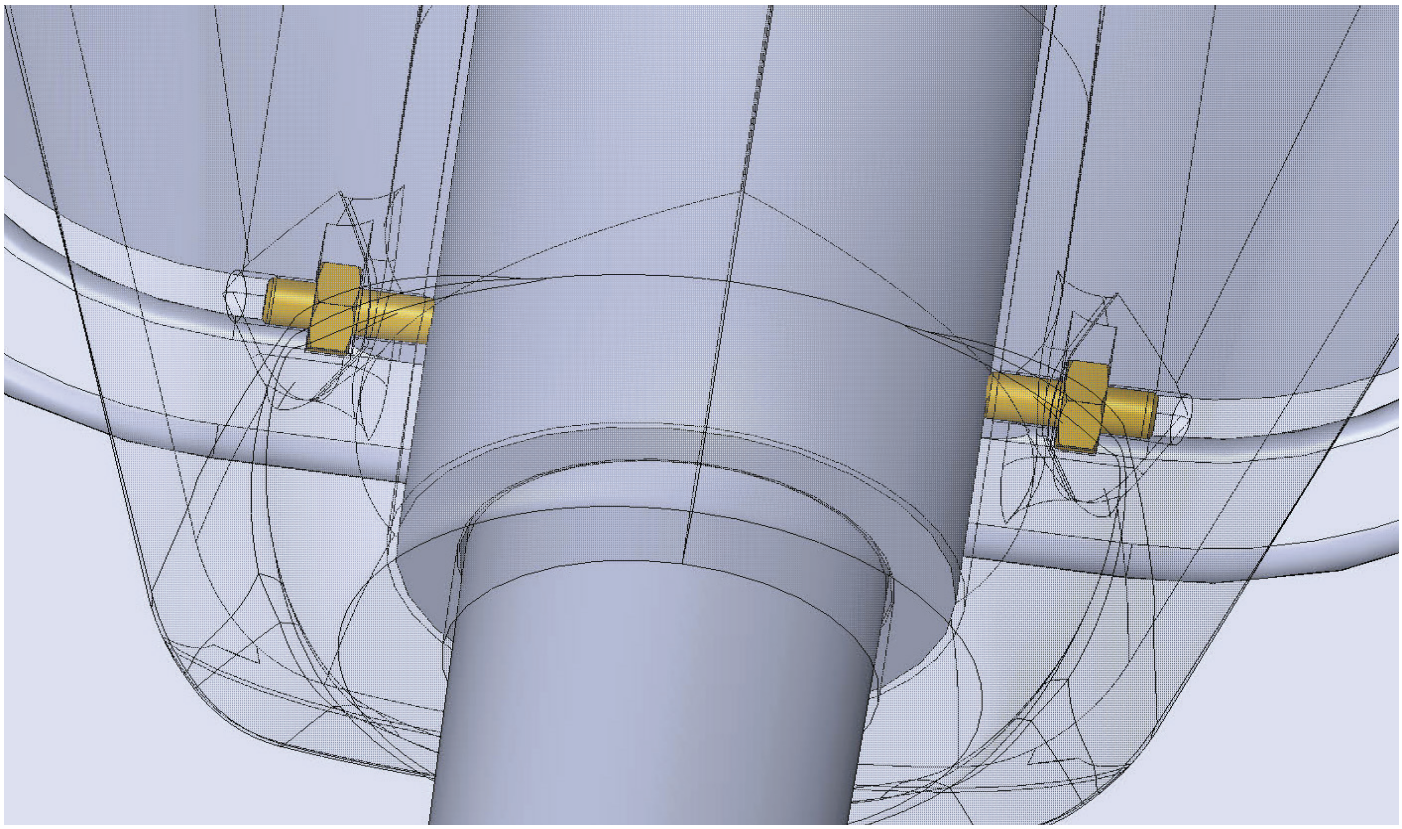

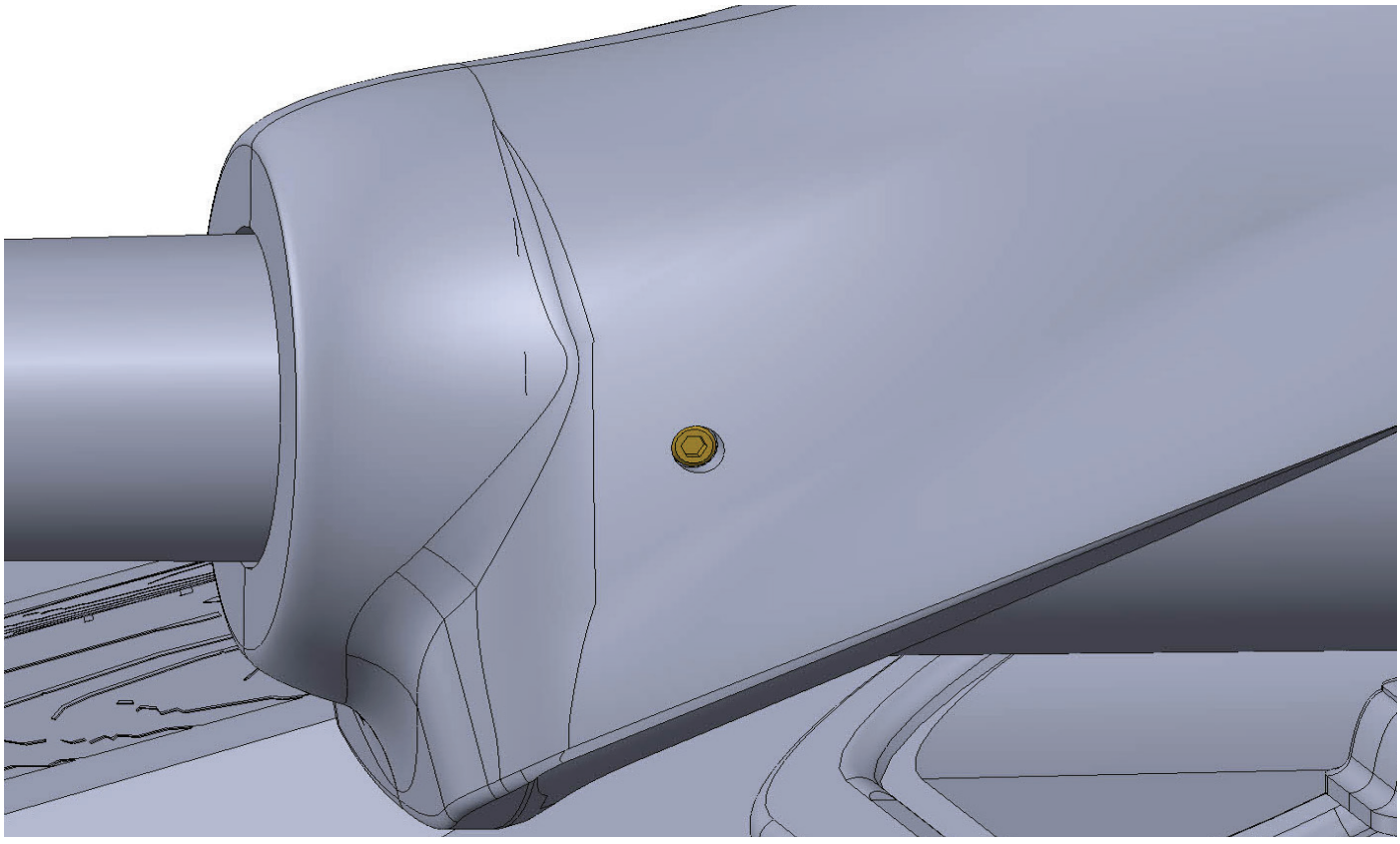

Additive views for better installation orientation.

Chapter 03 - Tracks

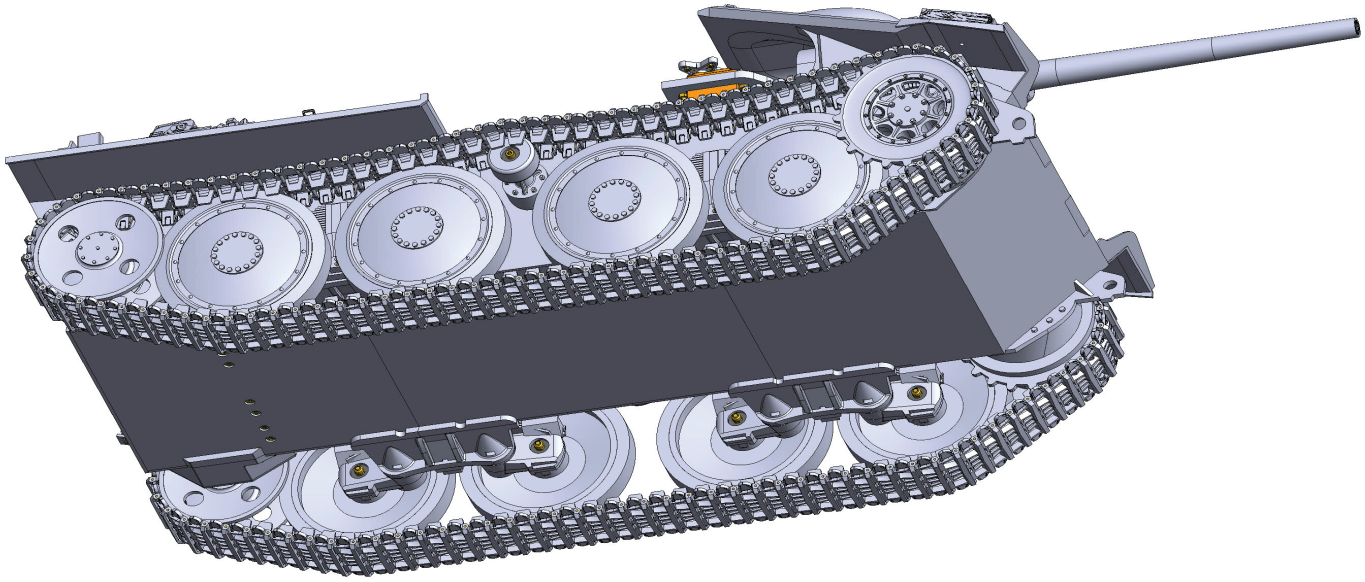

AMOUNT:	1
PRINTED PARTS:	03-01 (202x).
OPTIONAL PRINTED PARTS:	
NON-PRINTED PARTS:	Wire (pin) - 2 mm diameter and 50 mm lenght (200x).

Chapter 03 - Tracks

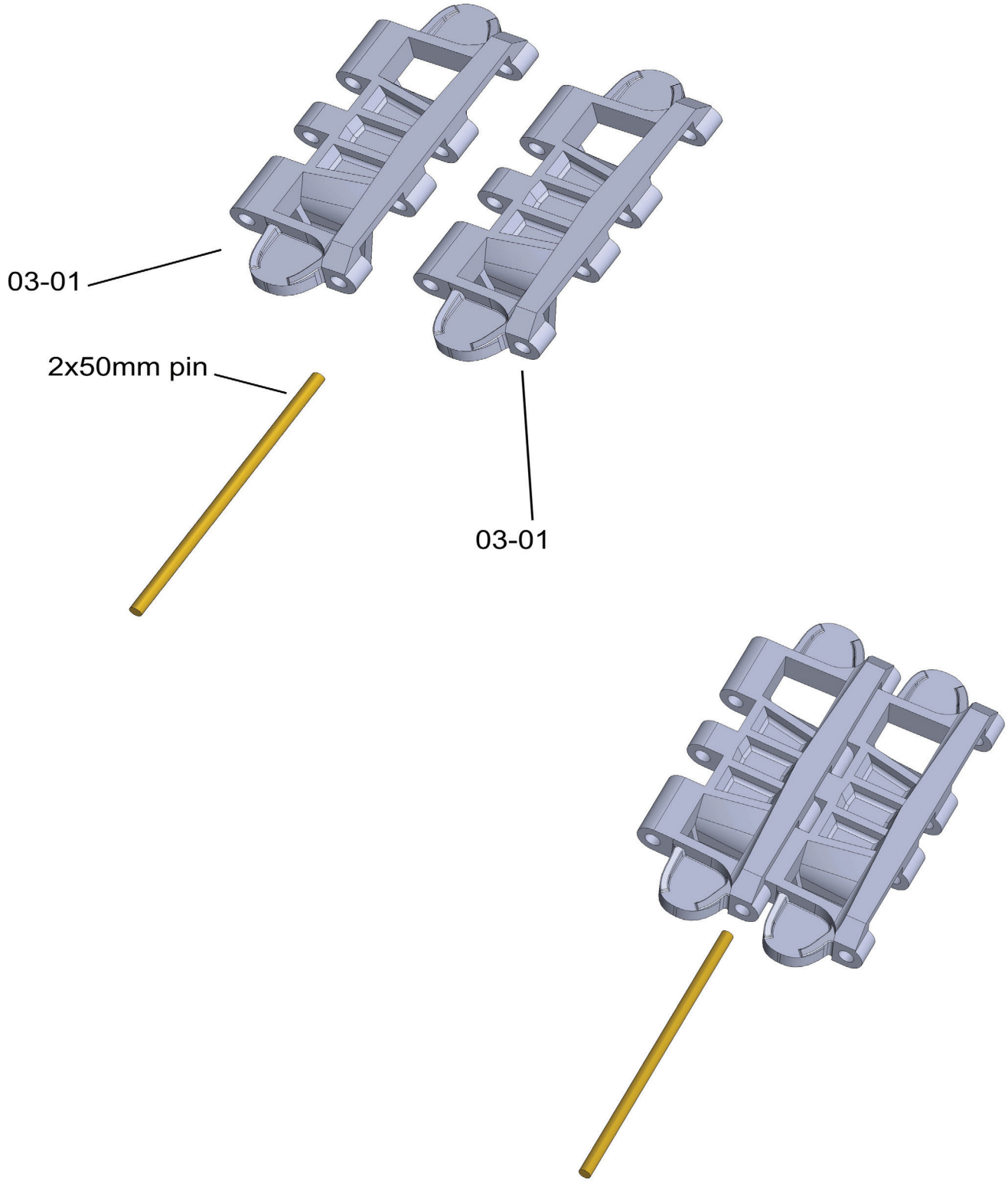

Here comes the most unpleasant part of the construction - tracks.
Join 03-01 parts with a pins of 2mm diameter and 50mm length.
Pour super glue on both ends of the wire.

Chapter 03 - Tracks

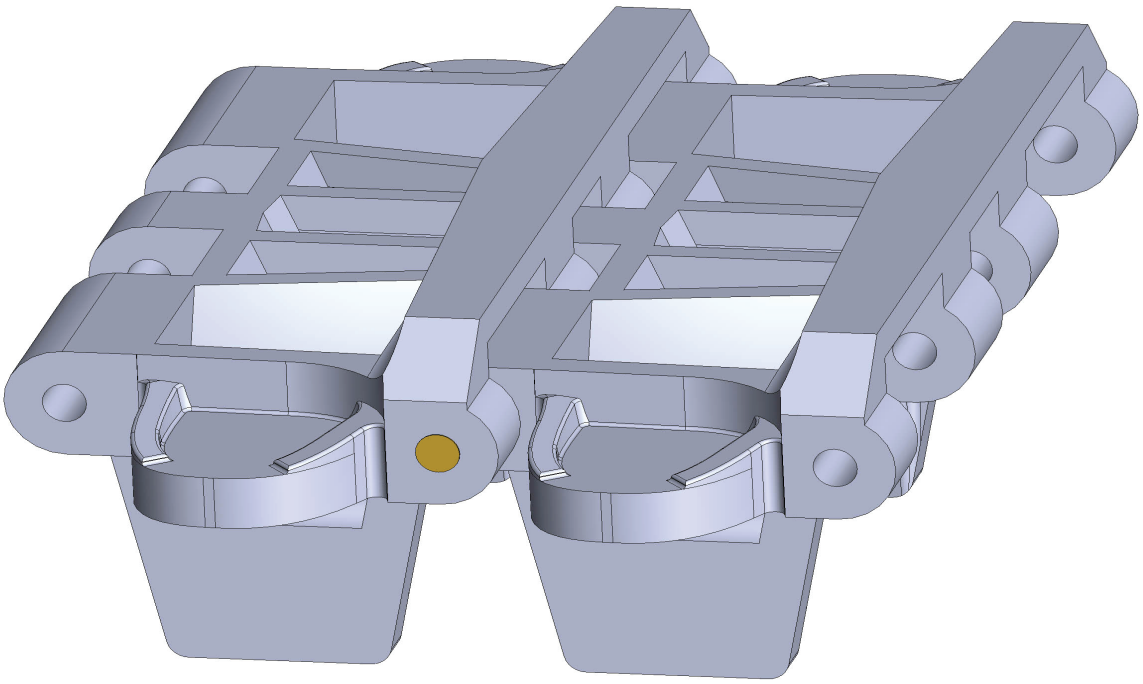

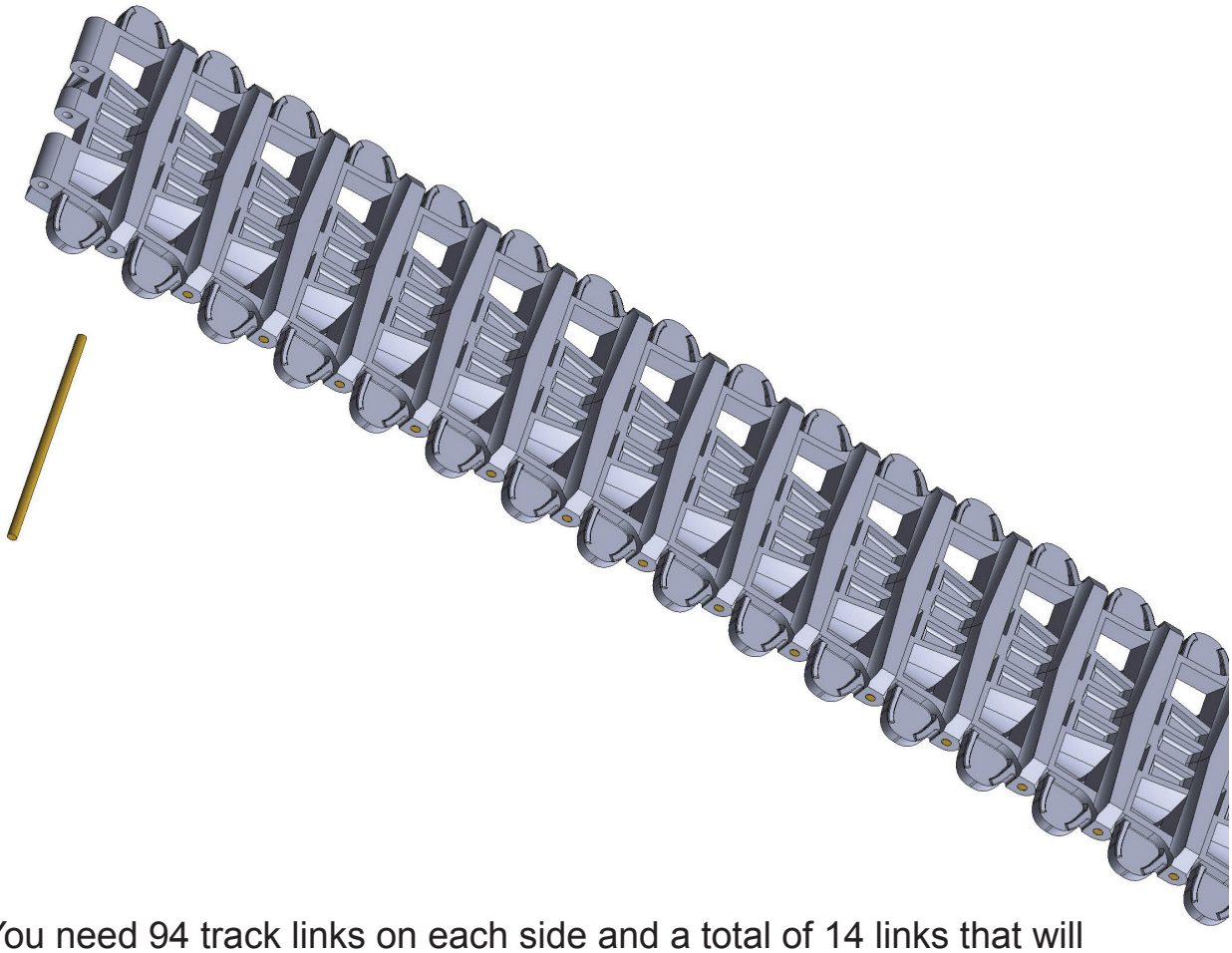

You need 94 track links on each side and a total of 14 links that will serve as spare ones.

Chapter 03 - Tracks

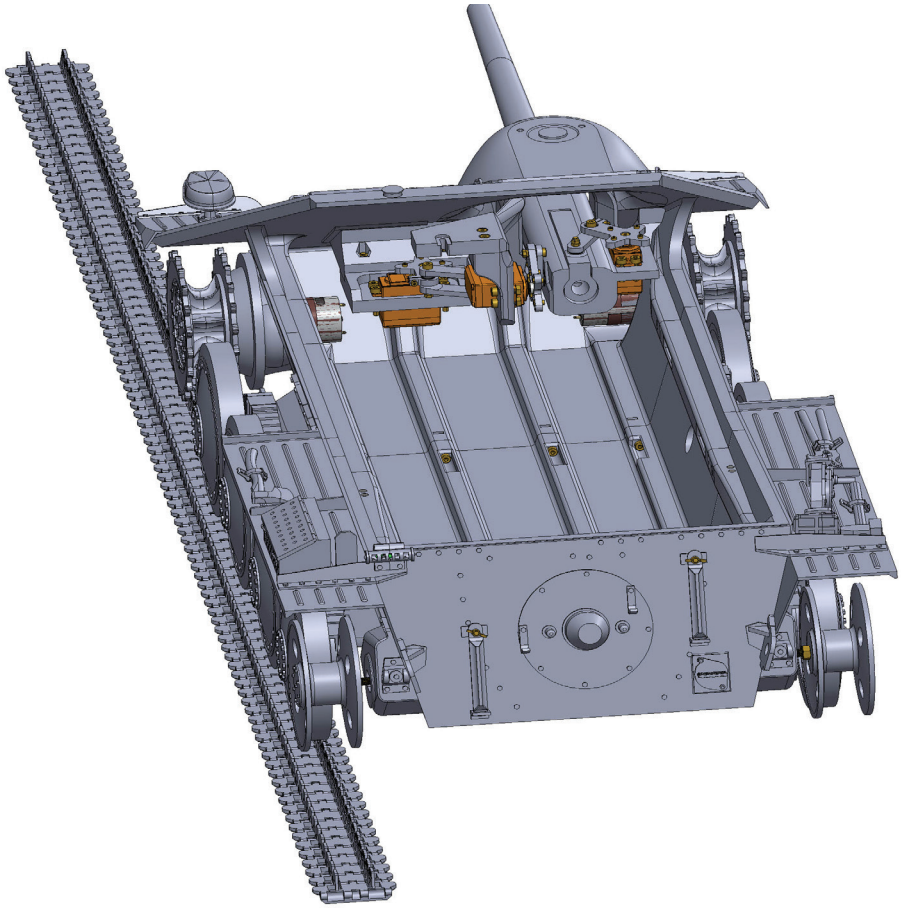

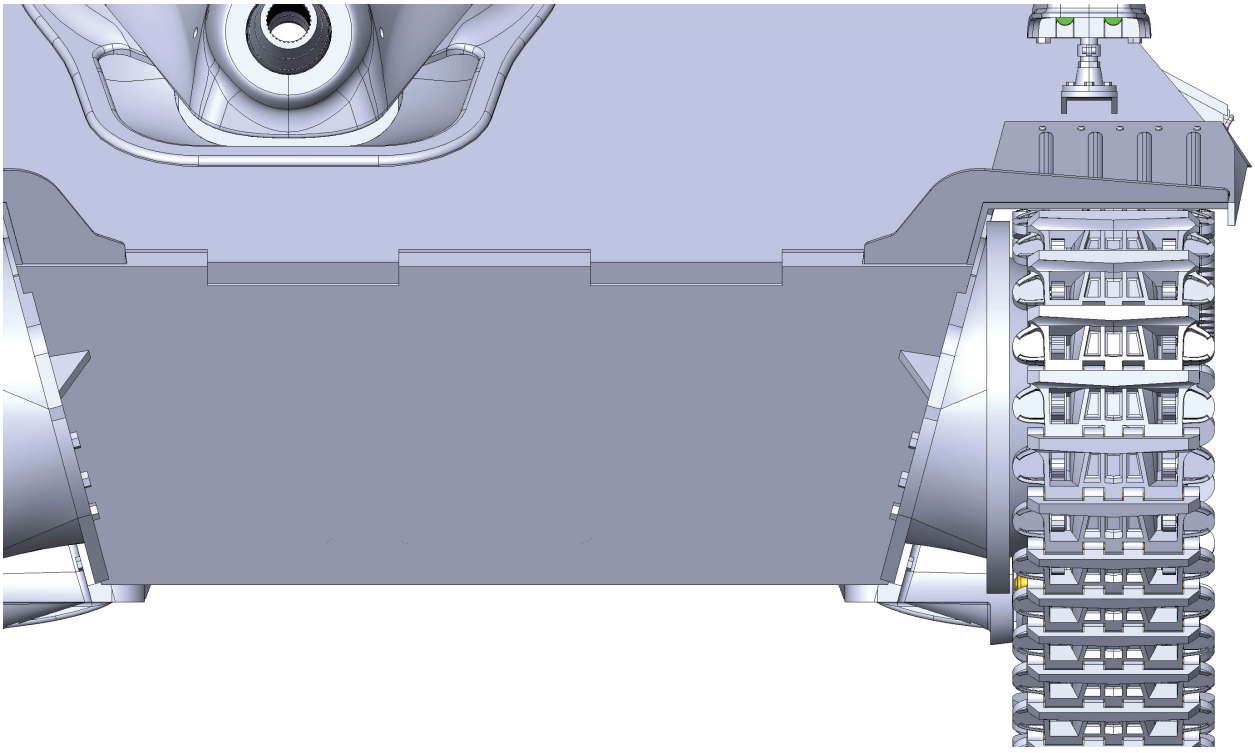

Place the model on the tracks. Close the tracks on the top with the last wire.
Tighten the tracks as needed using the rear wheel tensioner.
Tighten the M4 screw for greater tension.

Chapter 03 - Tracks

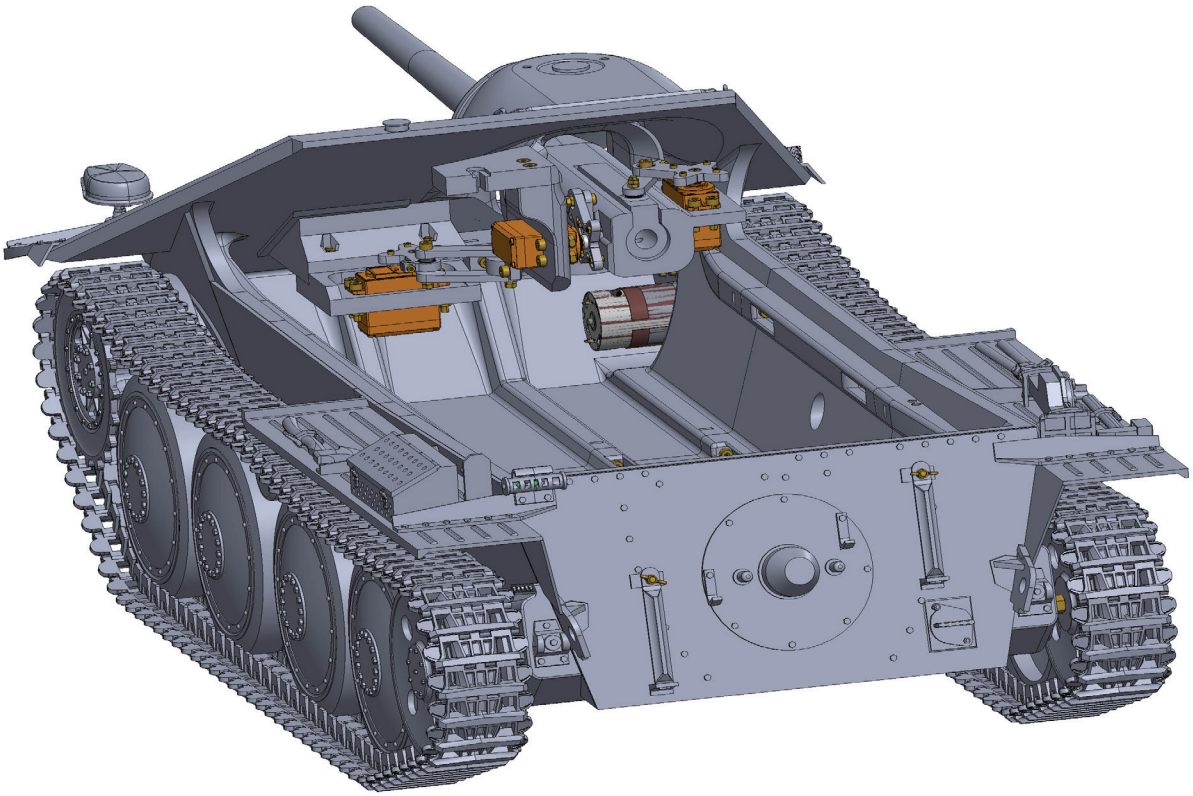

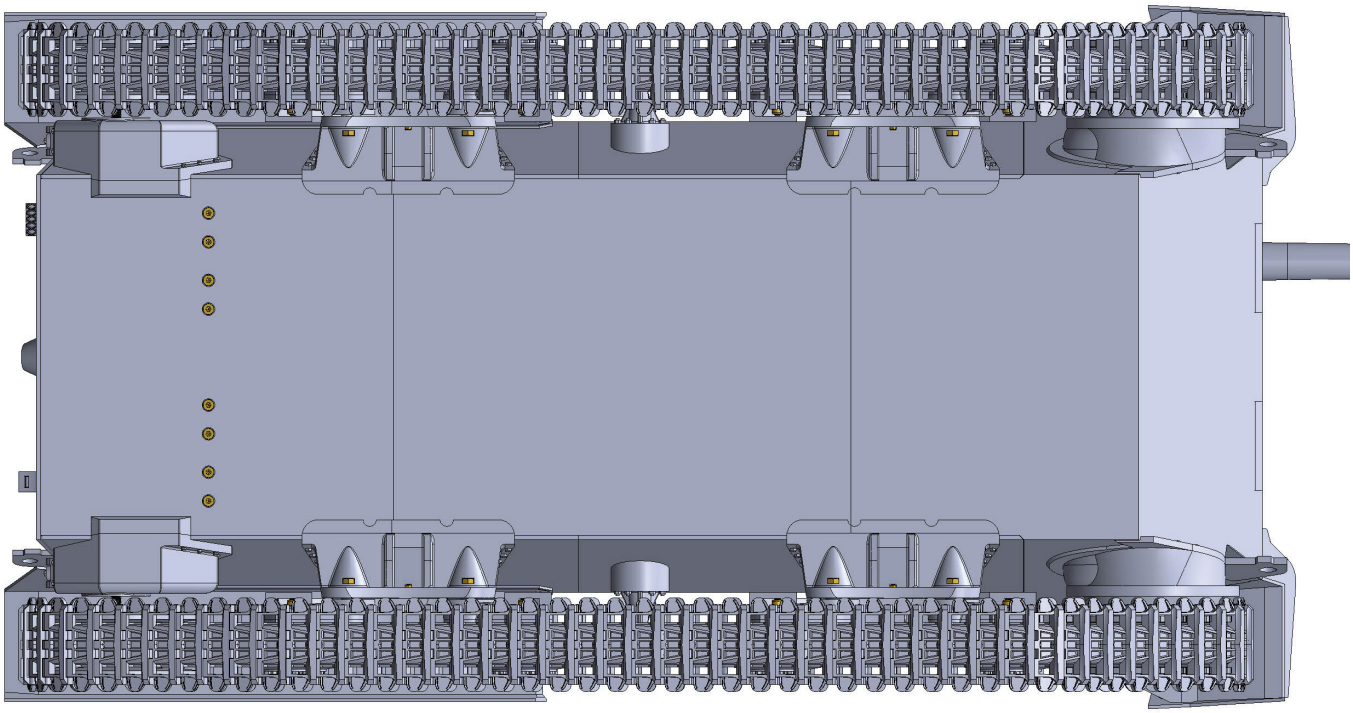

Additive views for better installation orientation.

Chapter 04 - Upper hull

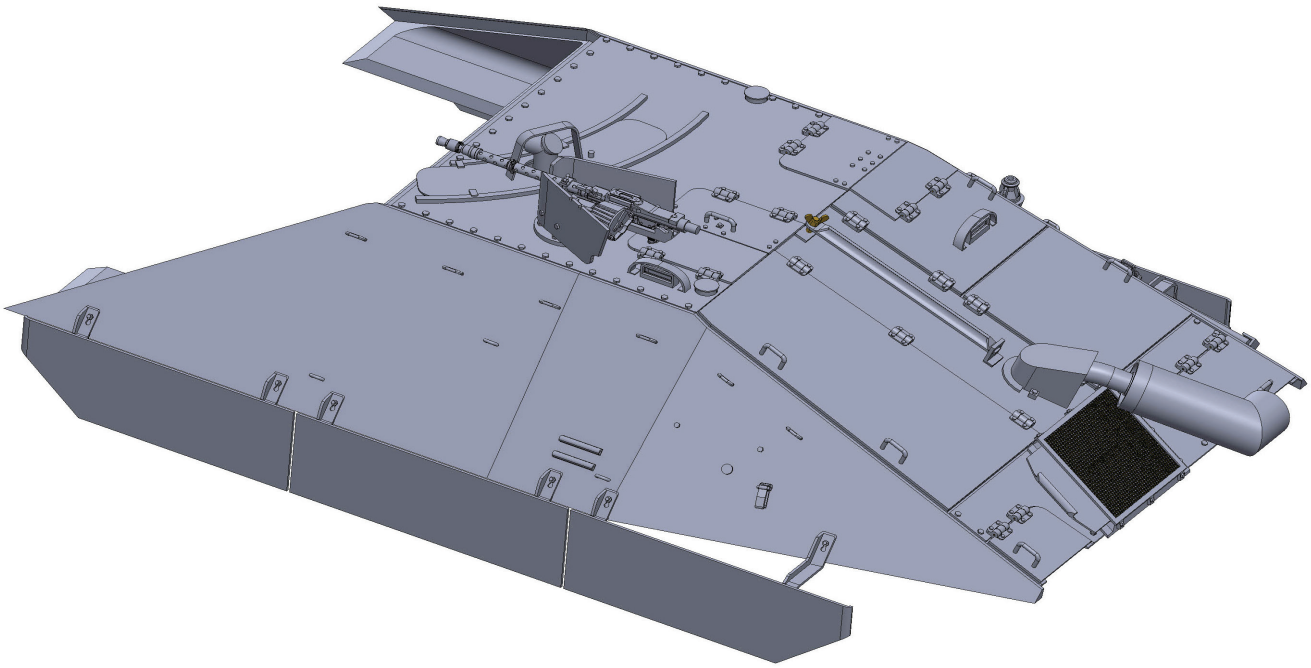

AMOUNT:	1
PRINTED PARTS:	04-01 (1x), 04-02 (1x), 04-03 (1x), 04-04 (1x), 04-05(1x), 04-06 (1x), 04-07 (1x), 04-08 (1x), 04-09 (1x), 04-10 (1x), 04-11 (1x), 04-12 (1x), 04-13 (1x), 04-14 (1x), 04-15 (2x), 04-16A (1x), 04-16B (1x), 04-16C (1x), 04-17A (1x), 04-17B (1x), 04-17C (1x), 04-17D (1x), 04-18 (1x), 04-19 (1x), 04-20 (1x), 04-21 (1x) ,04-22 (2x), 04-23 (1x), 04-24 (1x), 04-25 (1x), 04-26 (1x), 04-27 (1x), 04-28 (1x), 04-29 (1x), 04-30 (1x), 04-31 (1x) , 04-32 (1x), 04-33 (1x), 04-34 (1x), 04-35 (1x), 04-36 (1x), 04-37 (1x), 04-38 (1x), 04-39 (1x), 04-40 (1x), 04-41 (5x), 04-42 (5x), 04-43 (1x), 04-44 (1x), 04-45 (1x), 04-46 (1x), 04-47 (1x), MG34_1A (1x), MG34_1B (1x), MG34_2 (1x).
OPTIONAL PRINTED PARTS:	04-02_ALT_HINGE, 04-03_FULL_PERISCOPE, 04-04_FULL_PERISCOPE, 04-17B_FULL_PERISCOPE, MG34_DLP, NET_TEMPLATE, SERVO_alt, Alternative “schurzen” without 3D printed screws (04-33alt to 04-42alt).
NON-PRINTED PARTS:	M4x50 screw (4x), M4x20 screw (1x), M2x10 screw (2x), M4 nut (5x), M3 nut DIN316 (1x), M2 nut (2x), TOWERPRO® FR360 9g SERVO or compatible, Round magnets dia = 5mm - lenght = 7mm (4x), Round magnets dia = 3mm - lenght = 3mm (4x), Wire - 1mm diameter and 13,5mm lenght (19x), 2x4mm diagonal mesh.

Chapter 04 - Upper hull

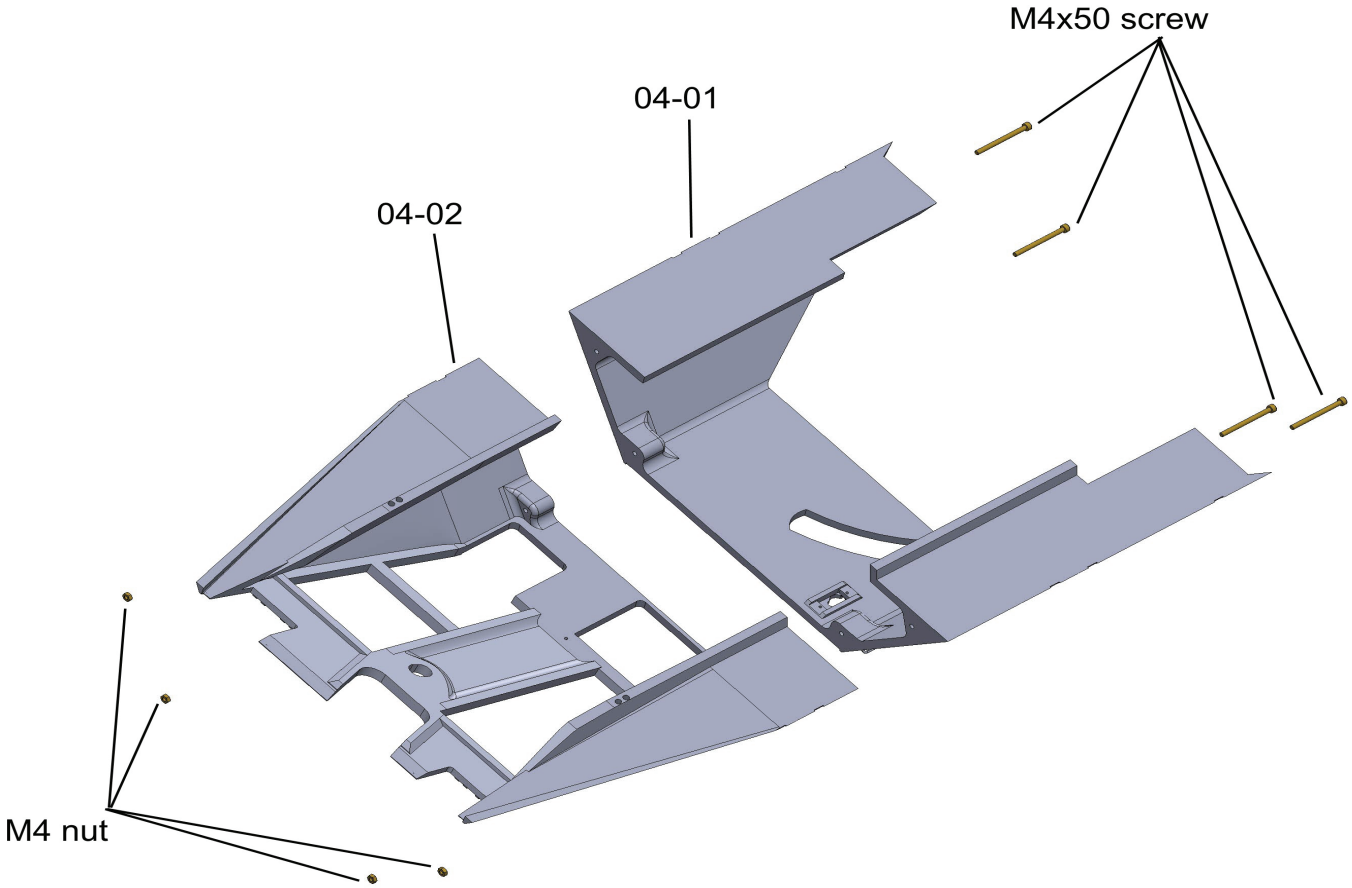

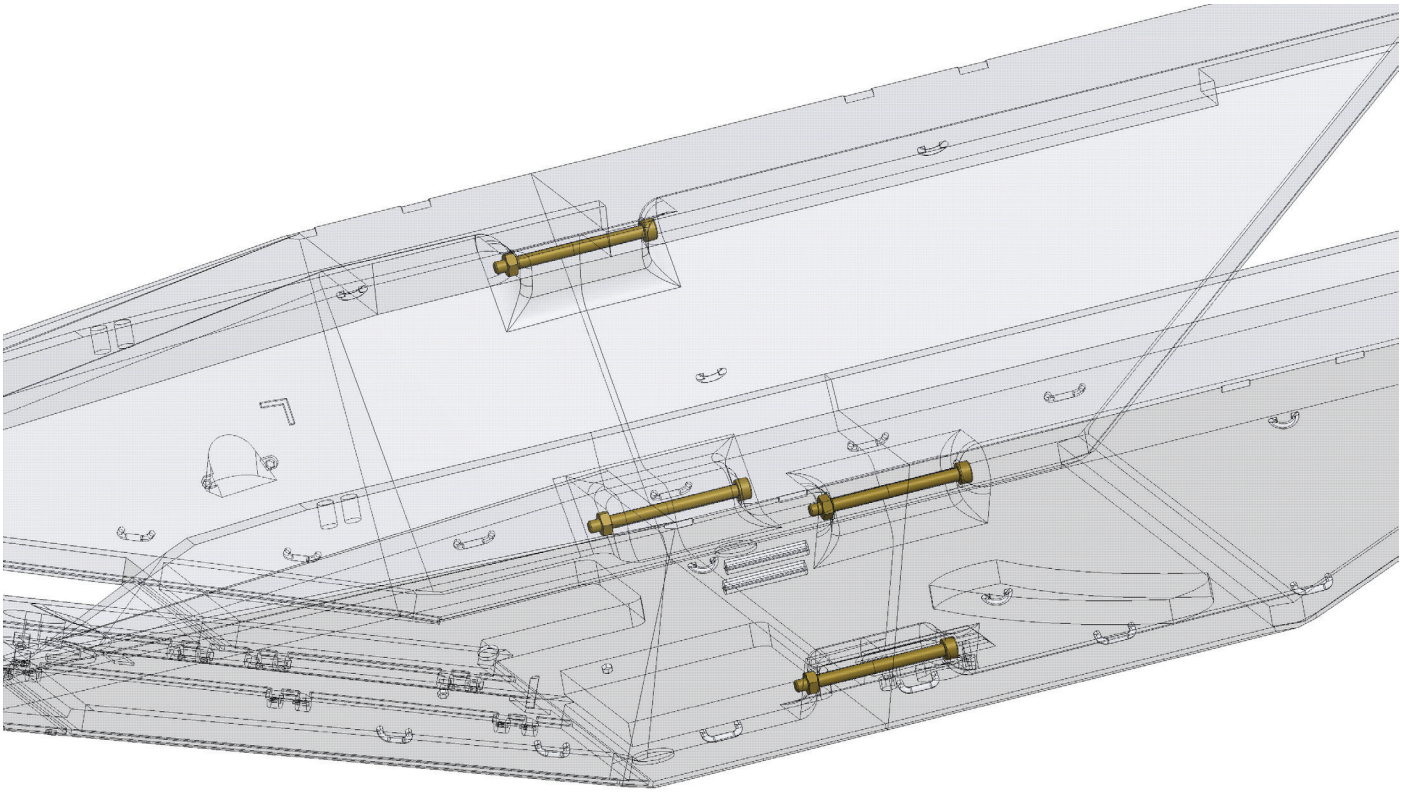

Connect part 04-01 and part 04-02 with four M4x50 screws and nuts.

Chapter 04 - Upper hull

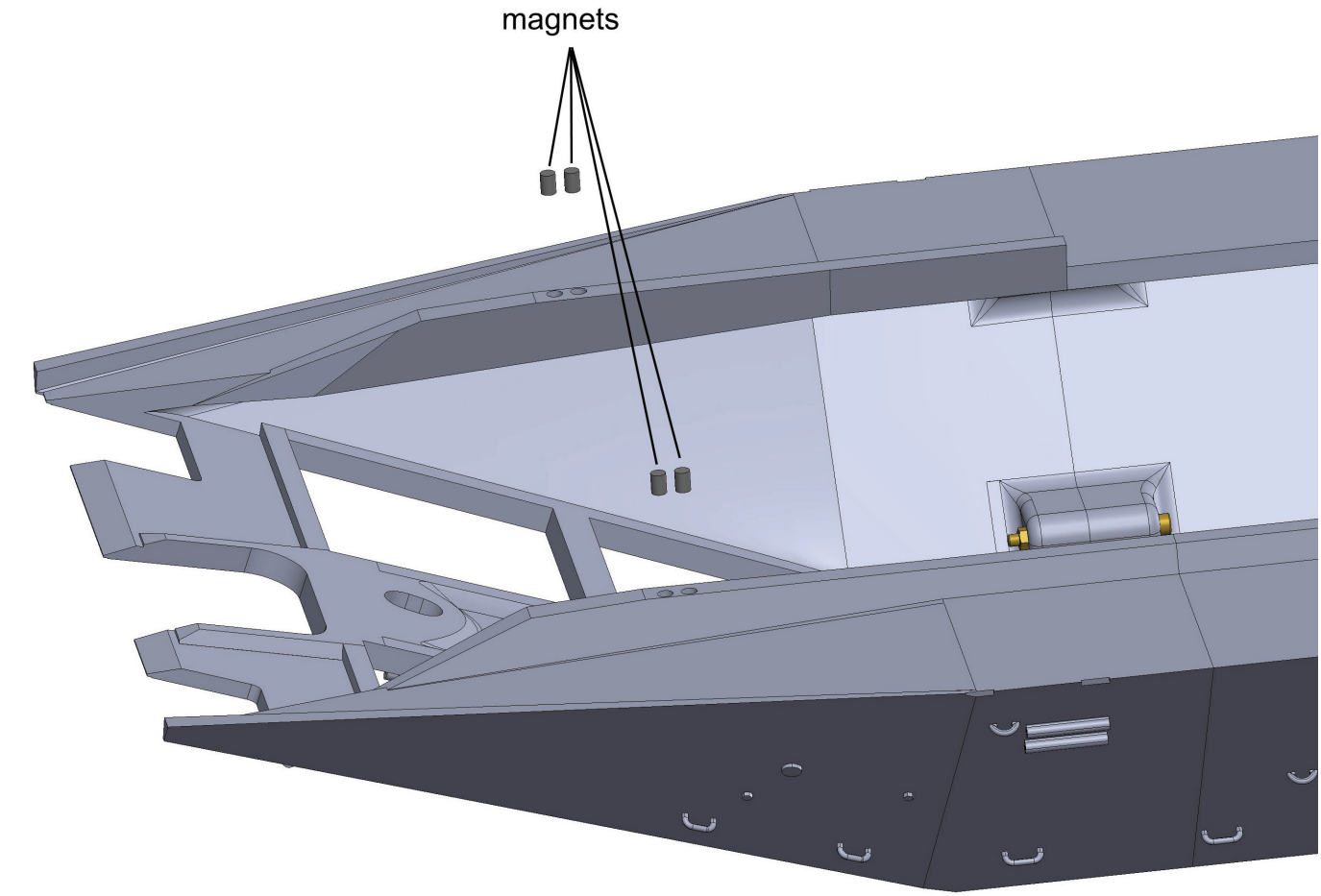

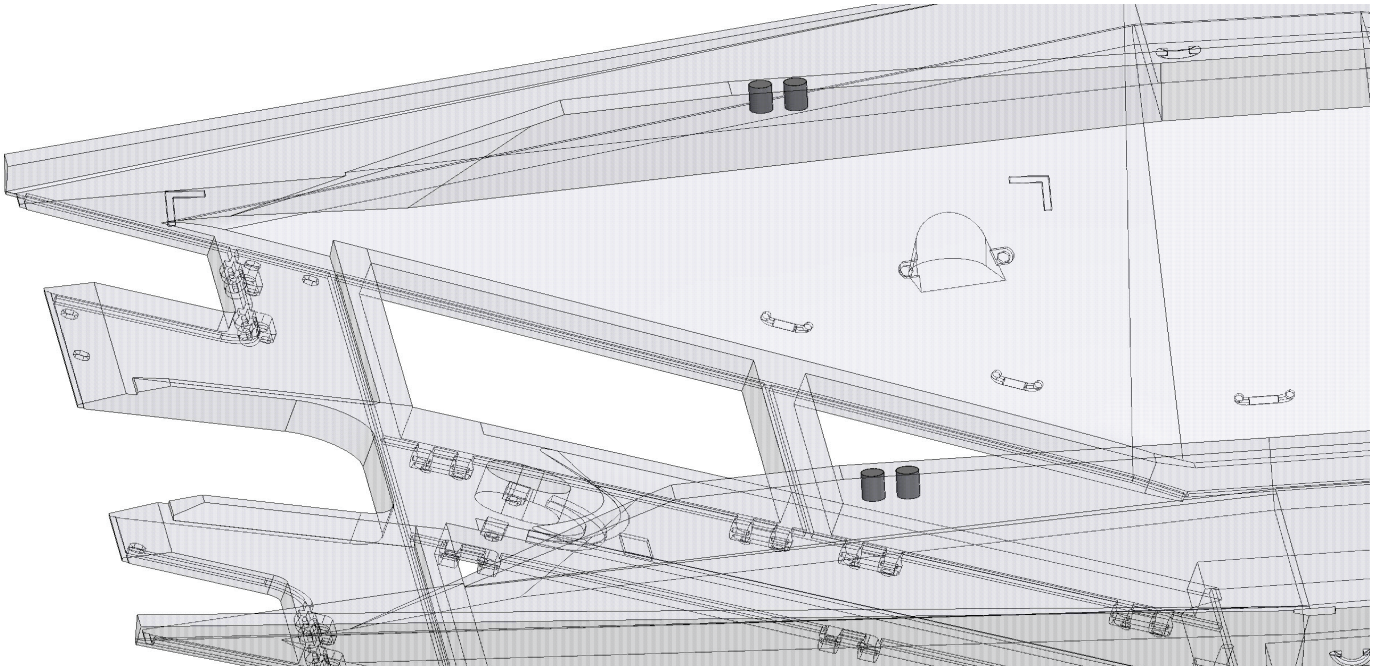

Insert 4 magnets - diameter 5mm, lenght 7mm.

Chapter 04 - Upper hull

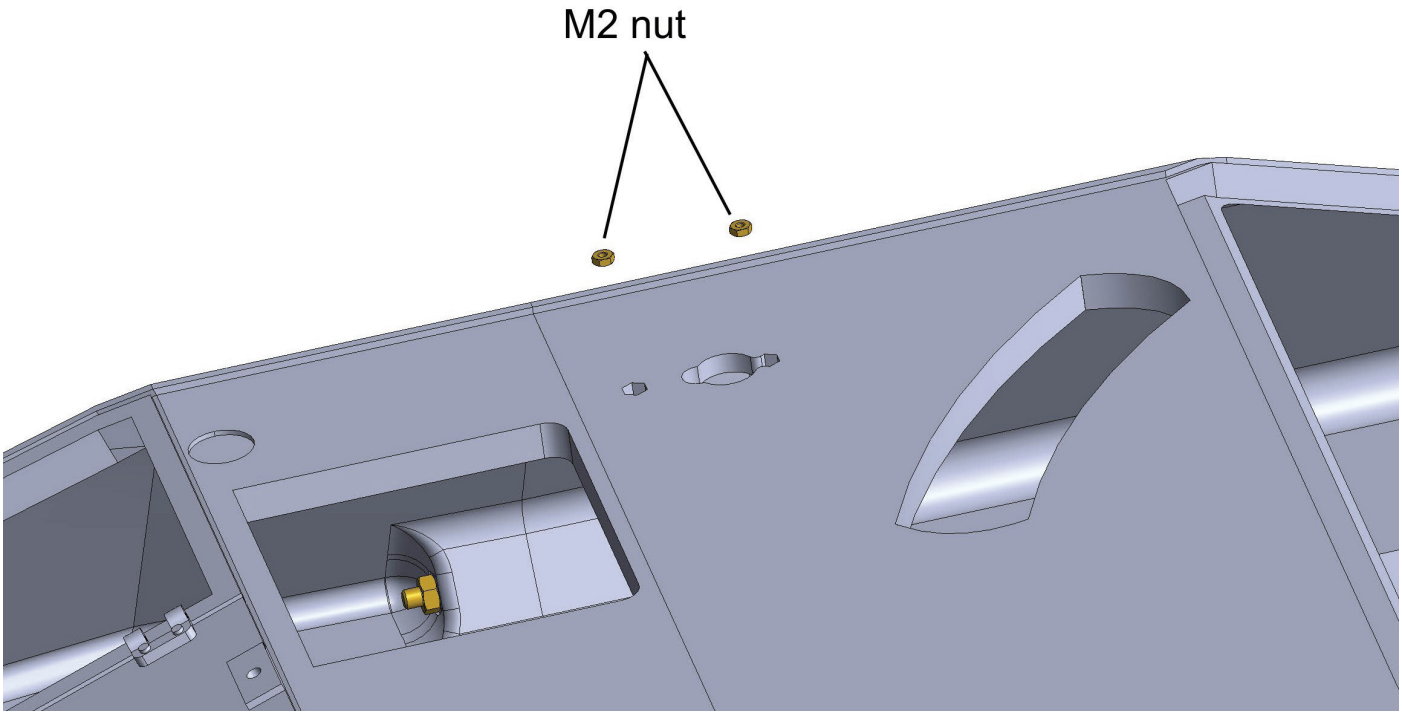

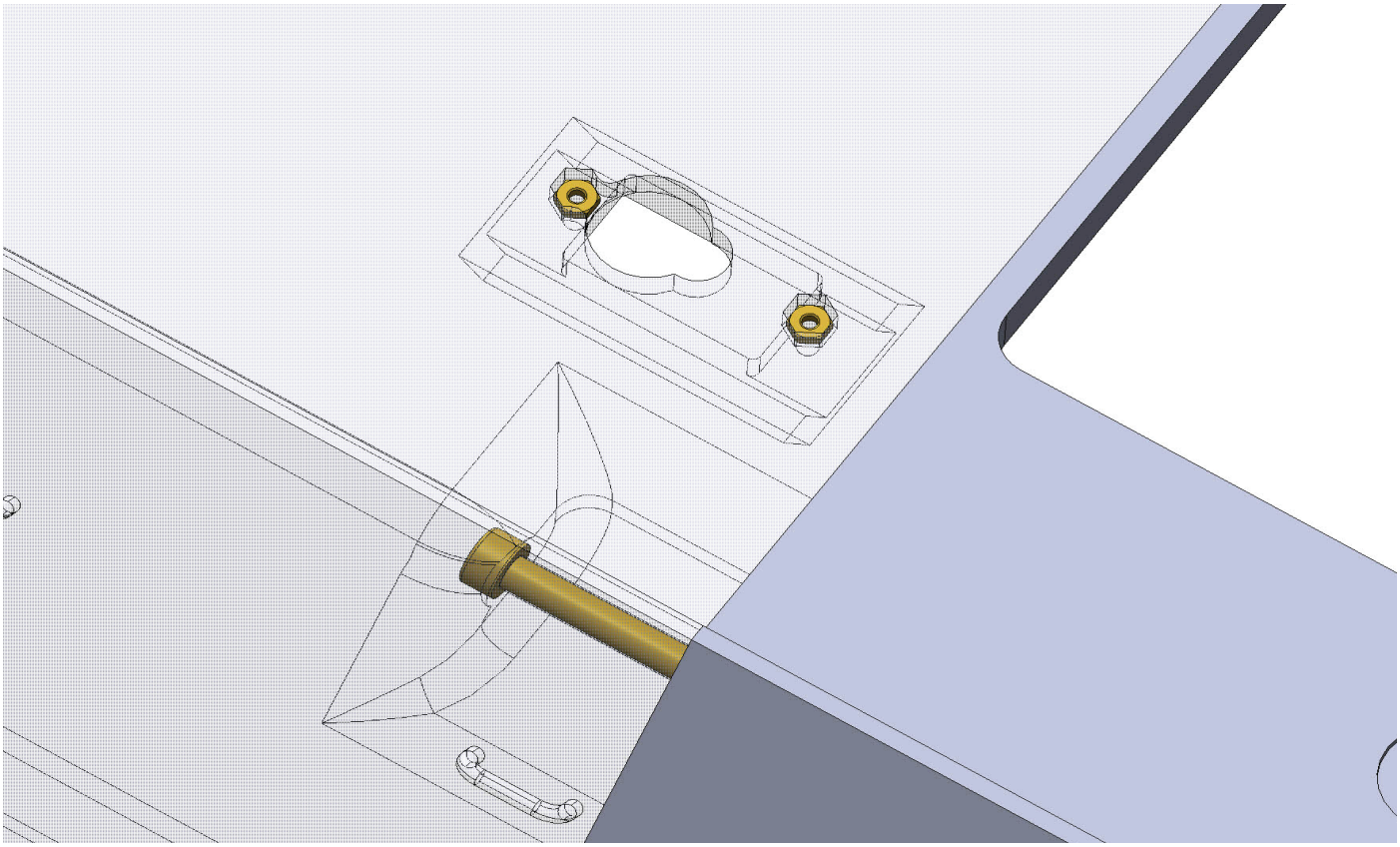

Insert two M2 nuts into part 04-01.

Chapter 04 - Upper hull

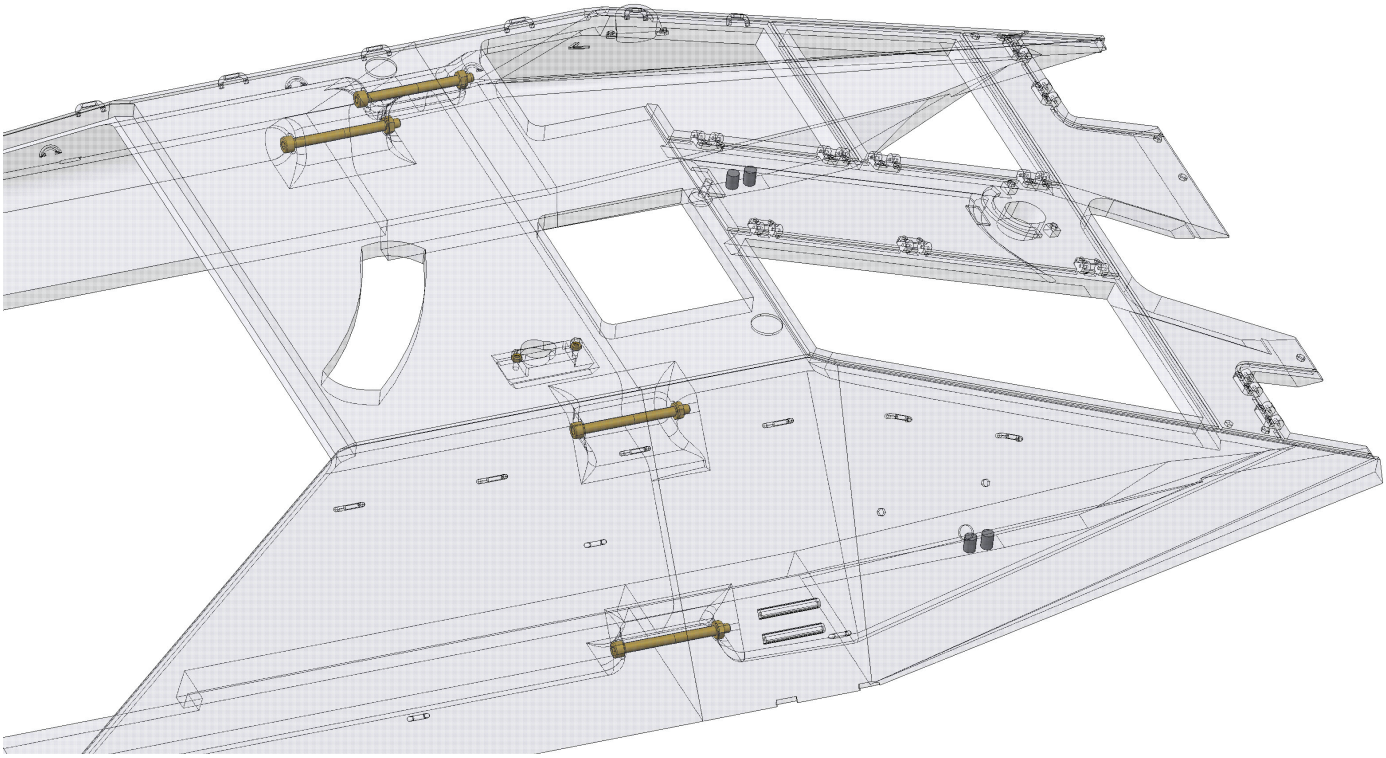

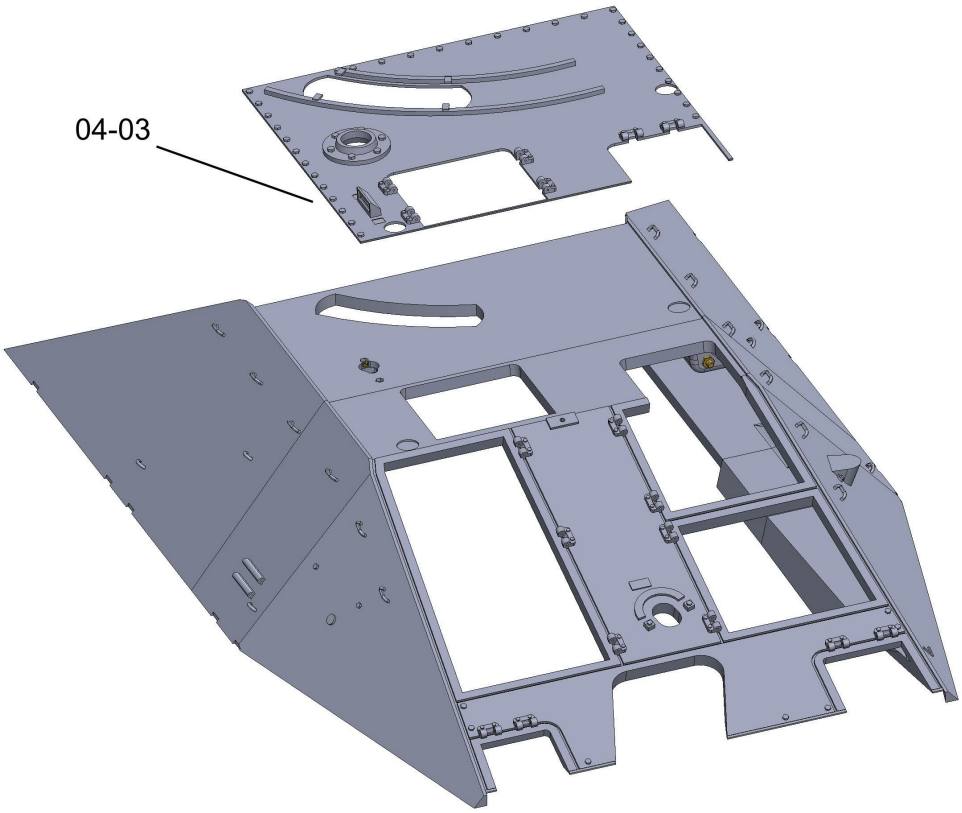

In the figure above you can see all the screws, nuts and magnets inserted in parts 04-01 and 04-02.
Attach part 04-03 to the top of the assembly.

Chapter 04 - Upper hull

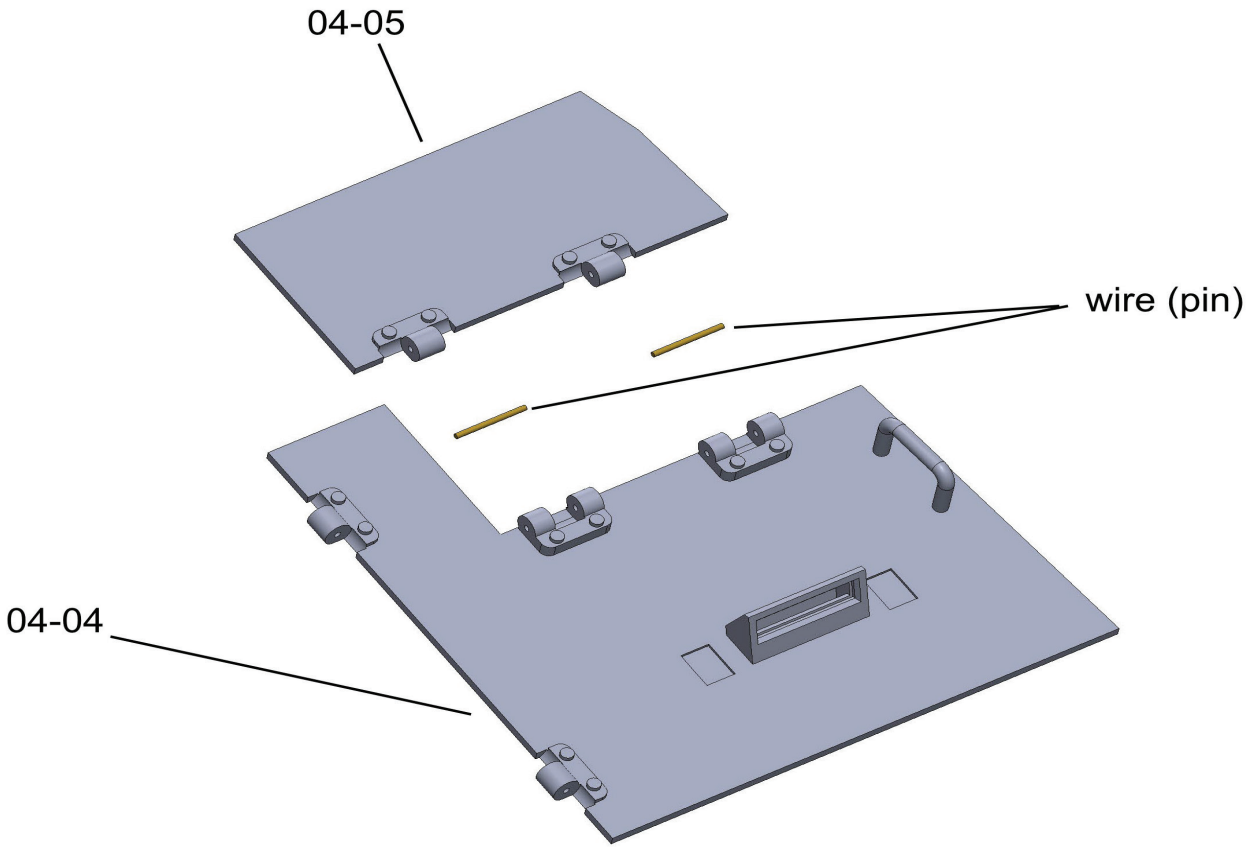

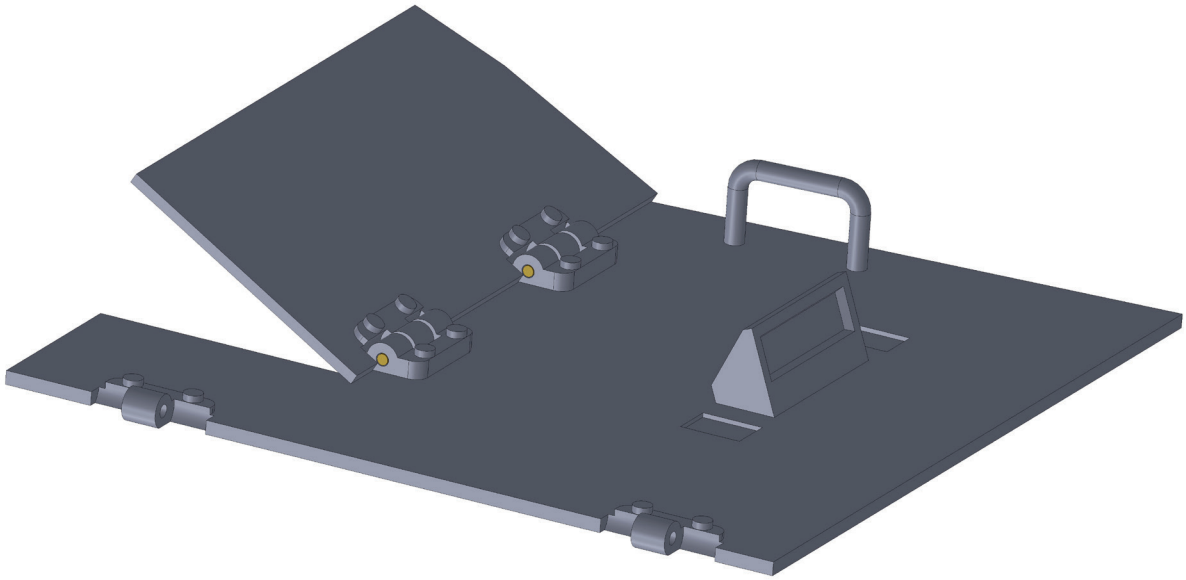

Join parts 04-04 and 04-05 using a wire of 1mm diameter and 13,5mm length.

Chapter 04 - Upper hull

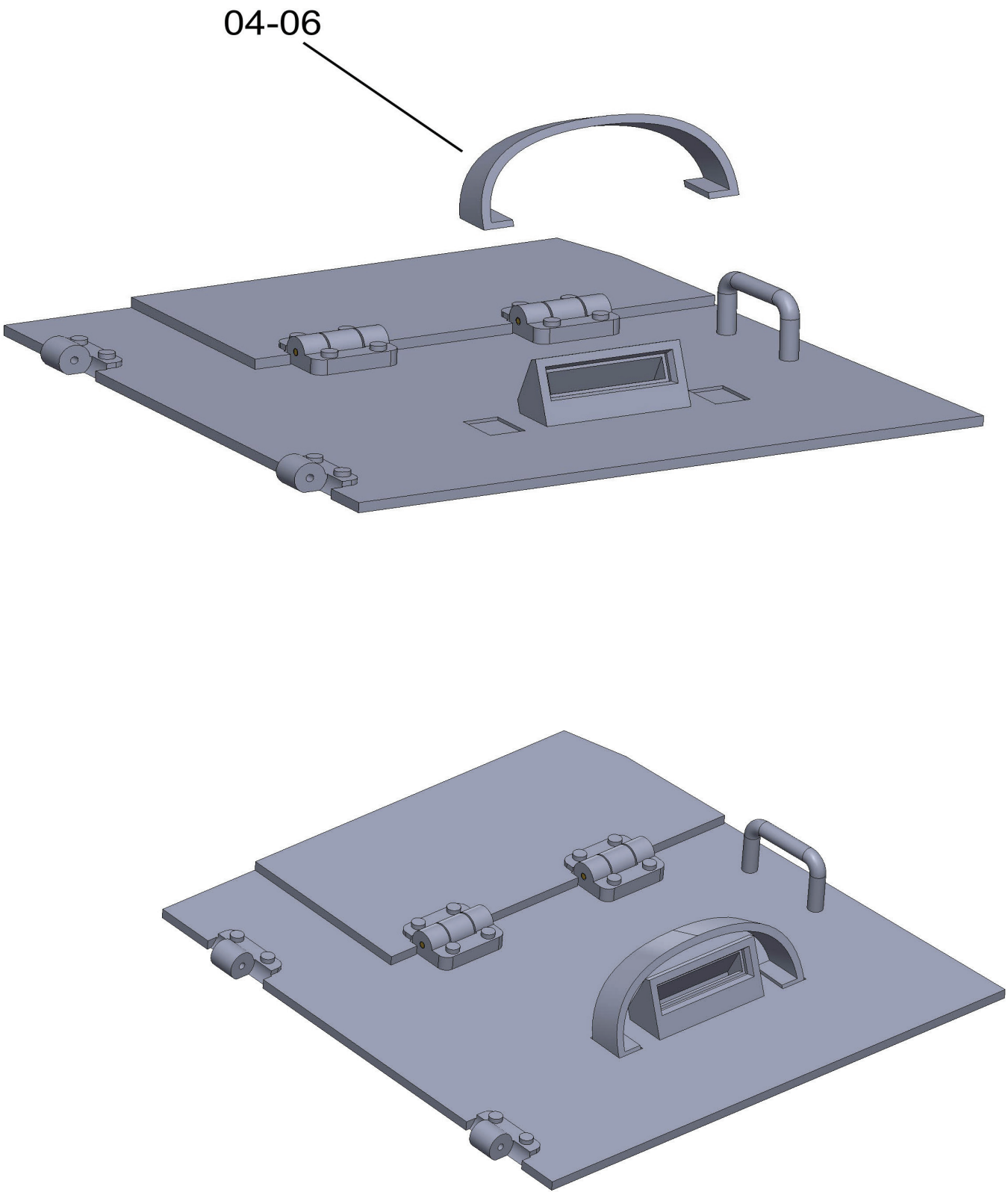

Glue part 04-06.

Chapter 04 - Upper hull

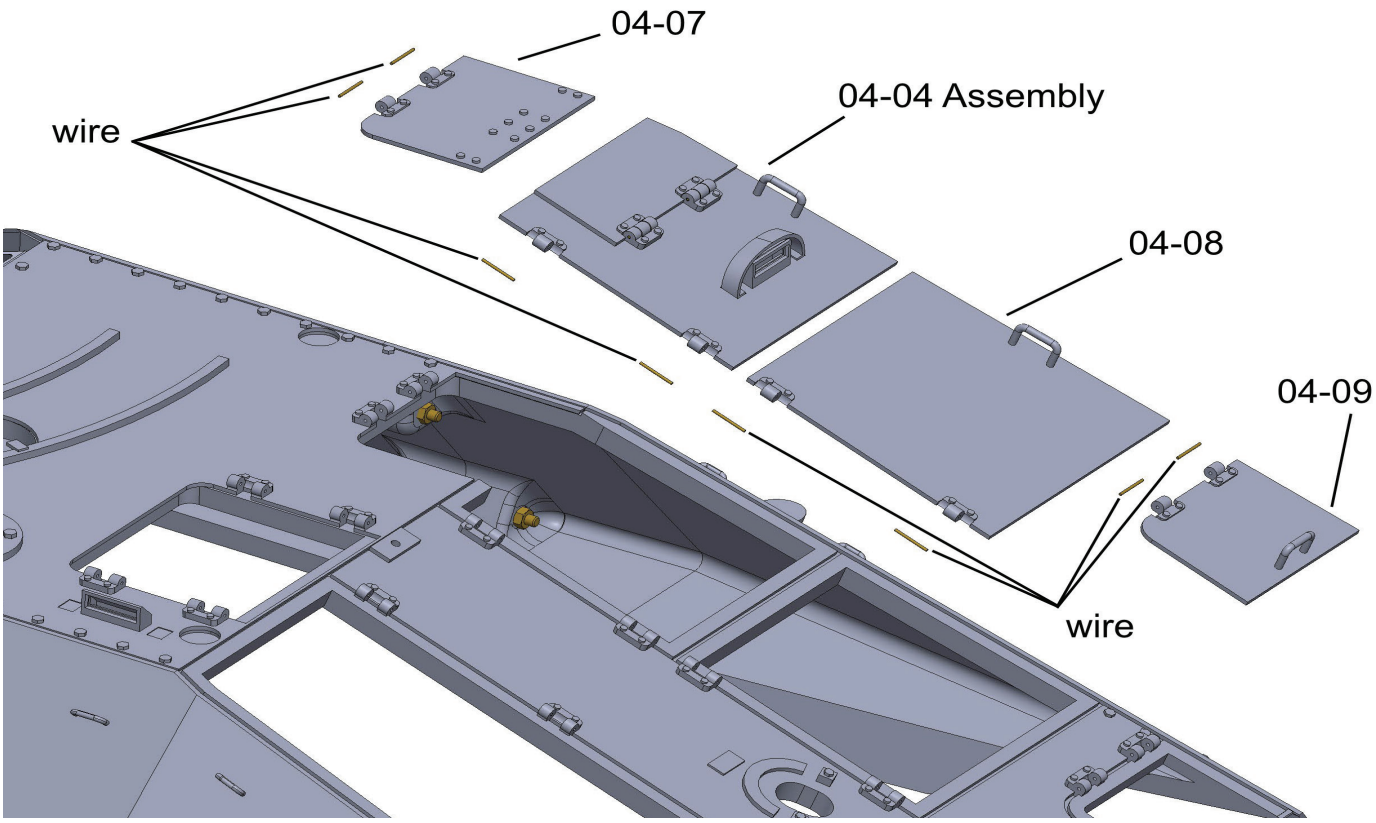

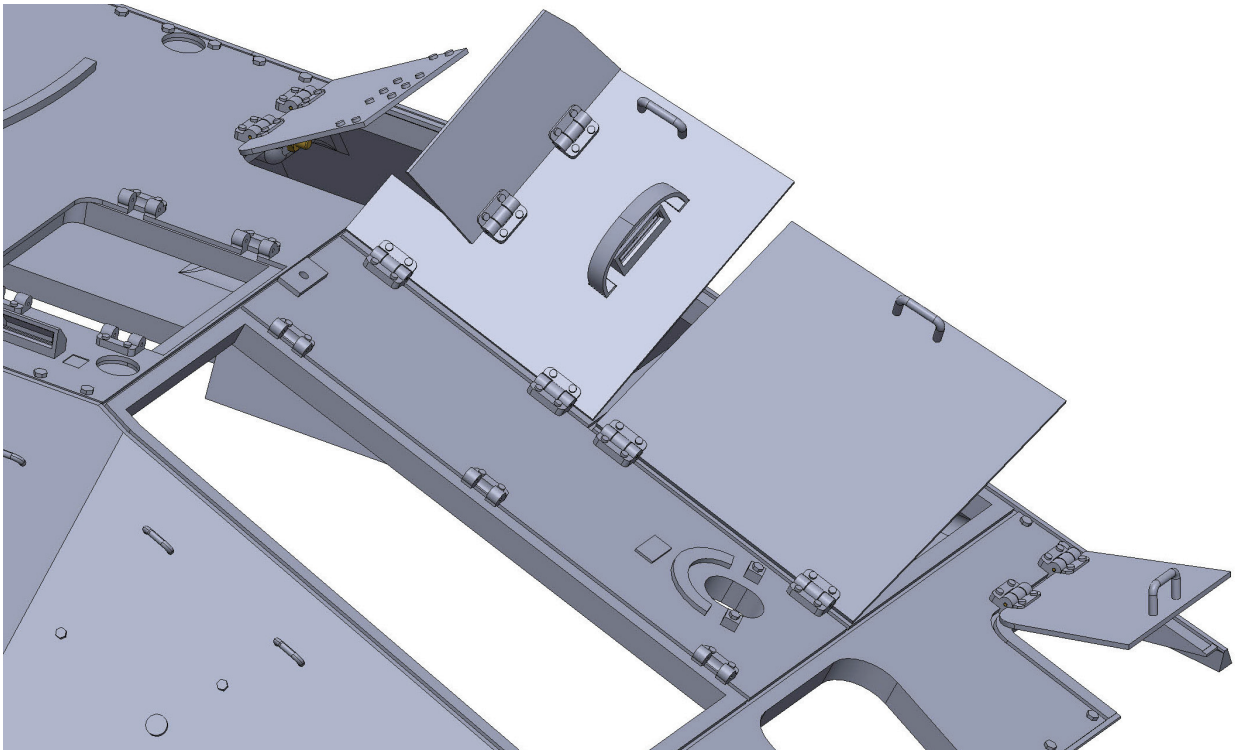

Join the 04-04 subassembly and the 04-07, 04-08 and 04-09 parts using a wire of 1mm diameter and 13,5mm length.

Chapter 04 - Upper hull

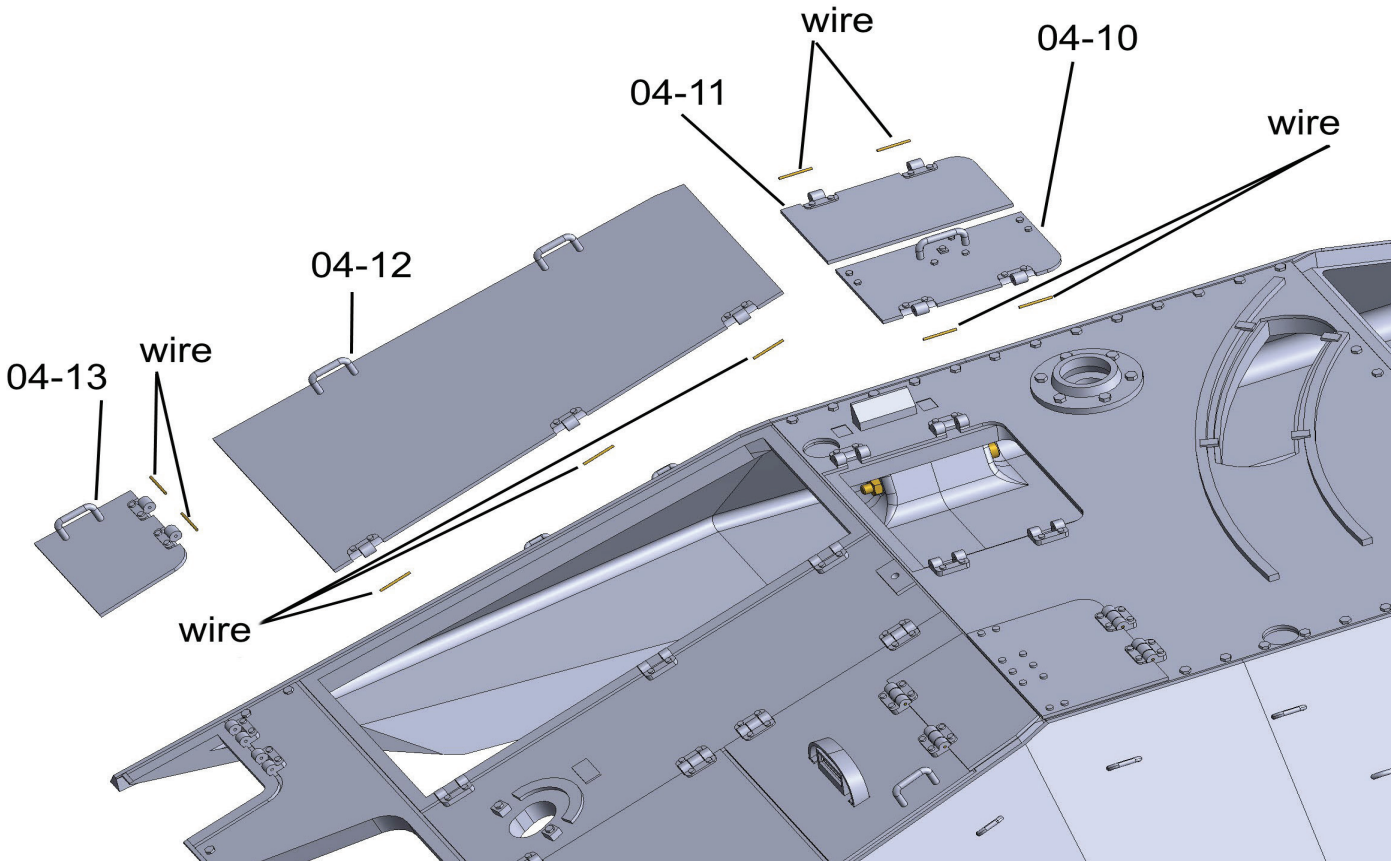

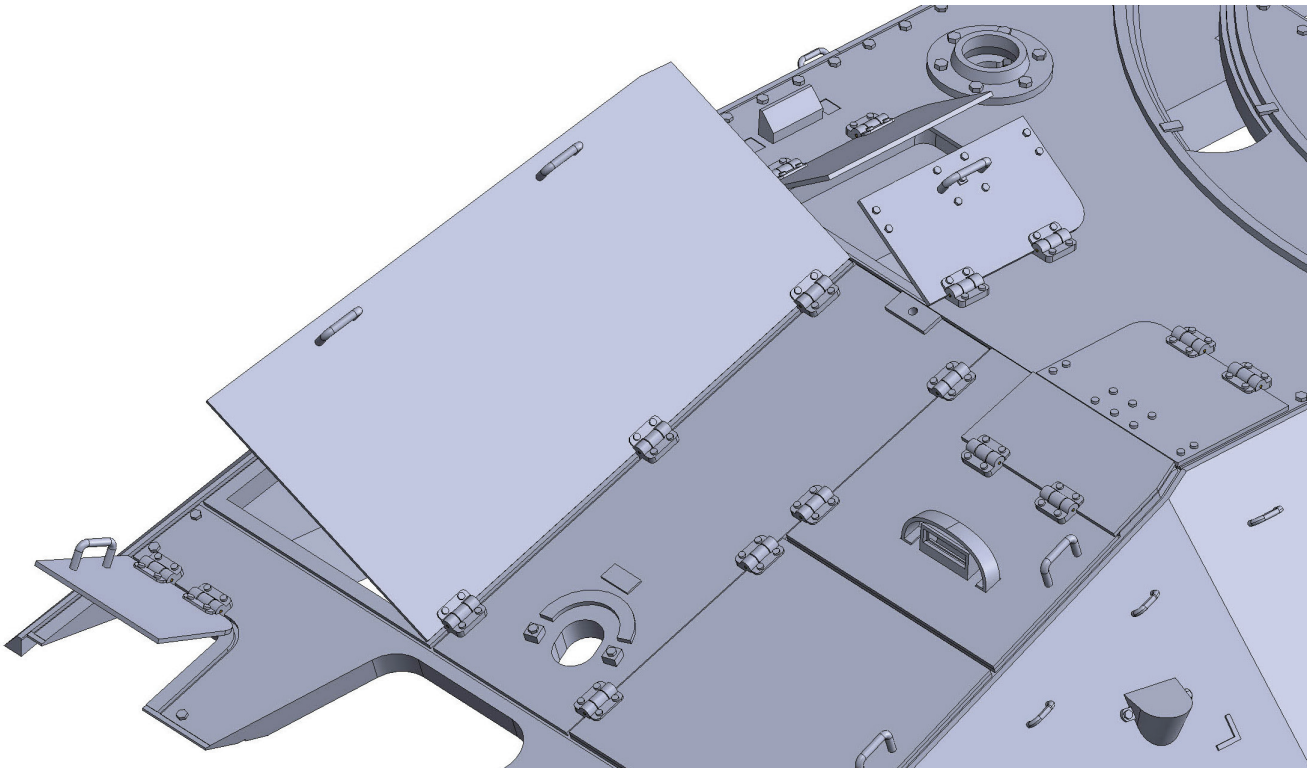

Connect parts 04-10, 04-11, 04-12 and 04-13 using a wire of 1mm diameter and 13,5mm length.

Chapter 04 - Upper hull

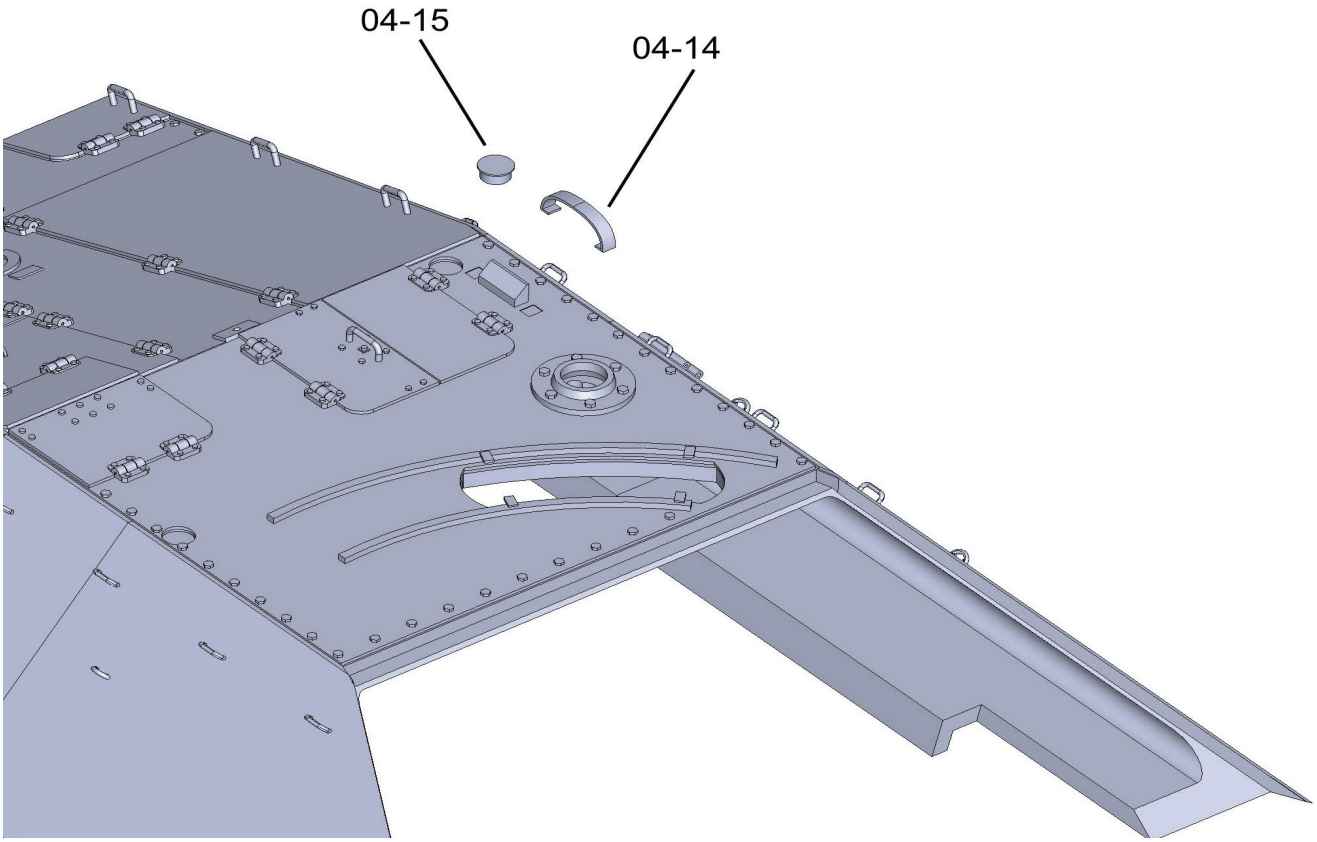

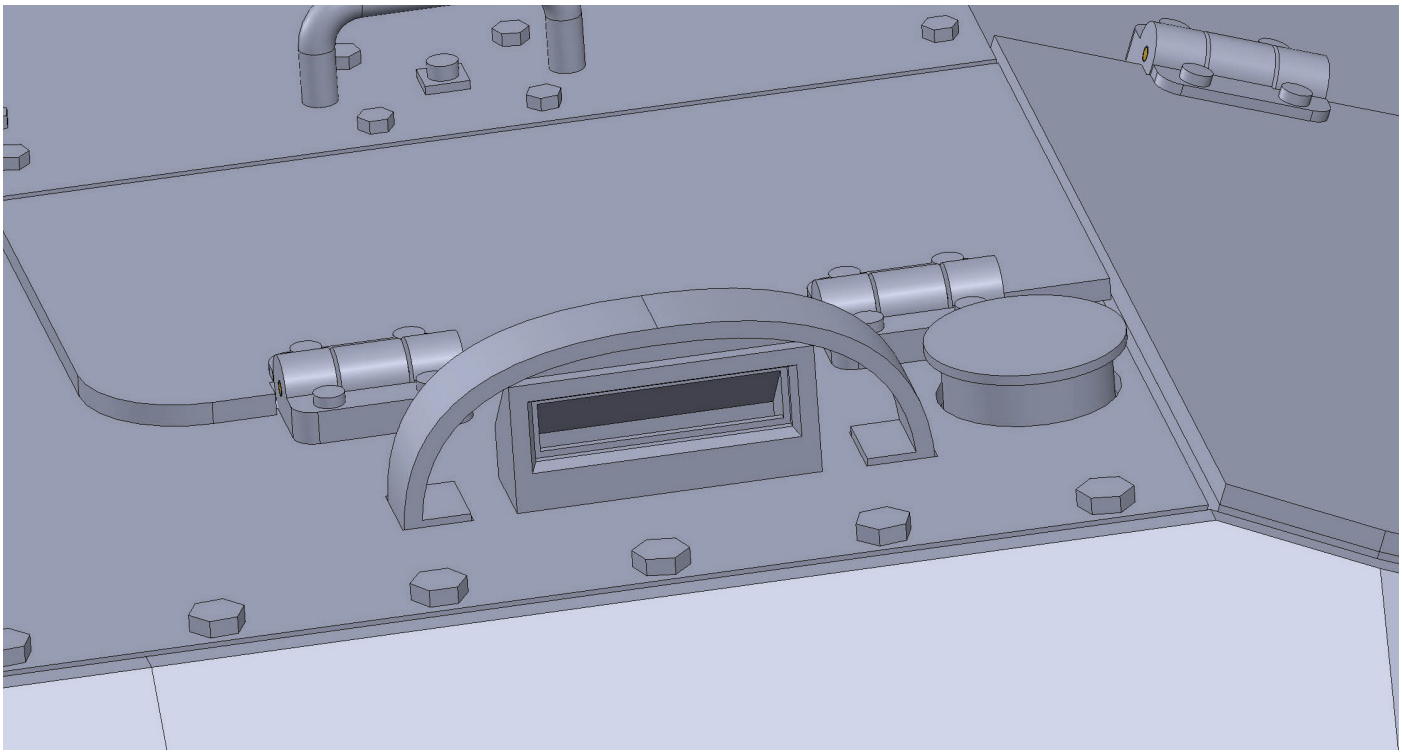

Glue parts 04-14 and 04-15.
Part 04-15 is identical to part 01-19.

Chapter 04 - Upper hull

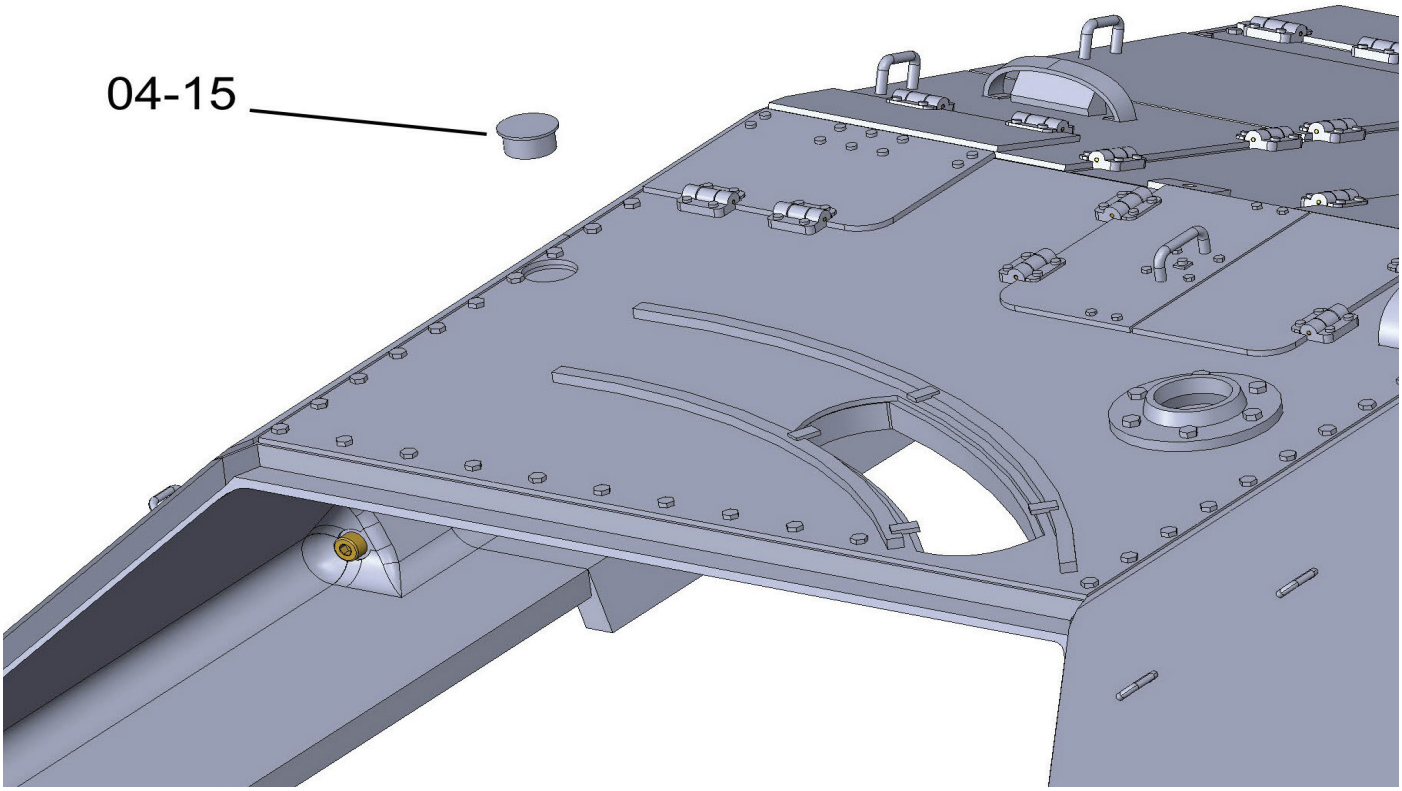

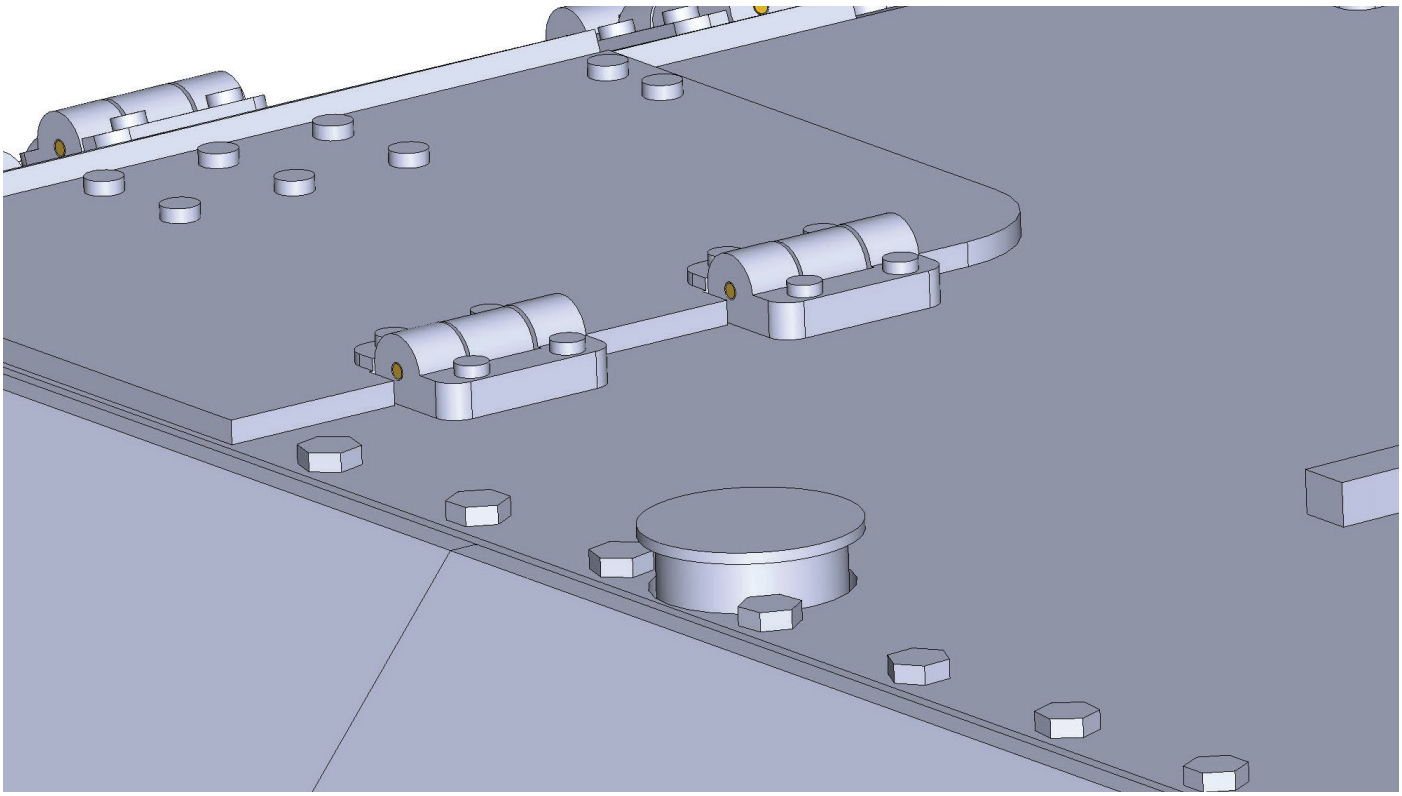

Glue the second part 04-15.

Chapter 04 - Upper hull

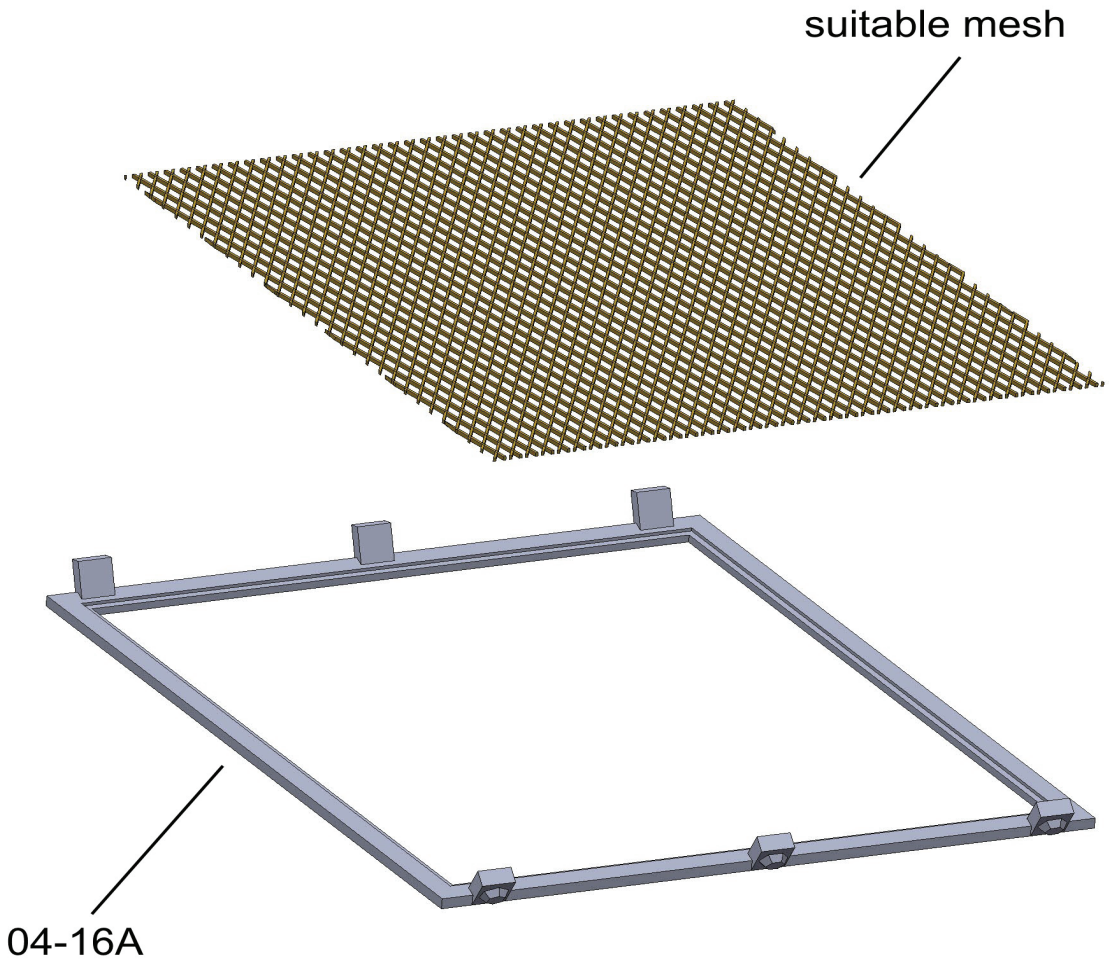

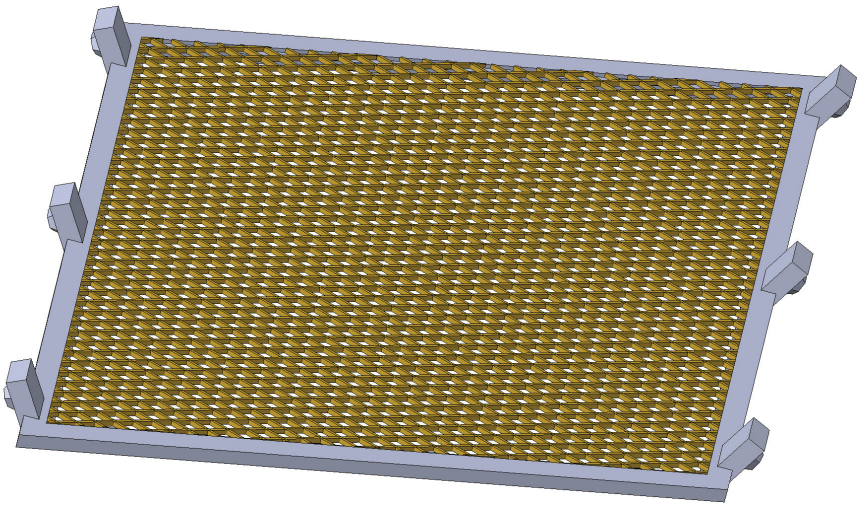

Glue the appropriate metal mesh to the part 04-16A.
We recommend 2x4mm diagonal mesh.
You can use the **NET_TEMPLATE** to cut your mesh.

Chapter 04 - Upper hull

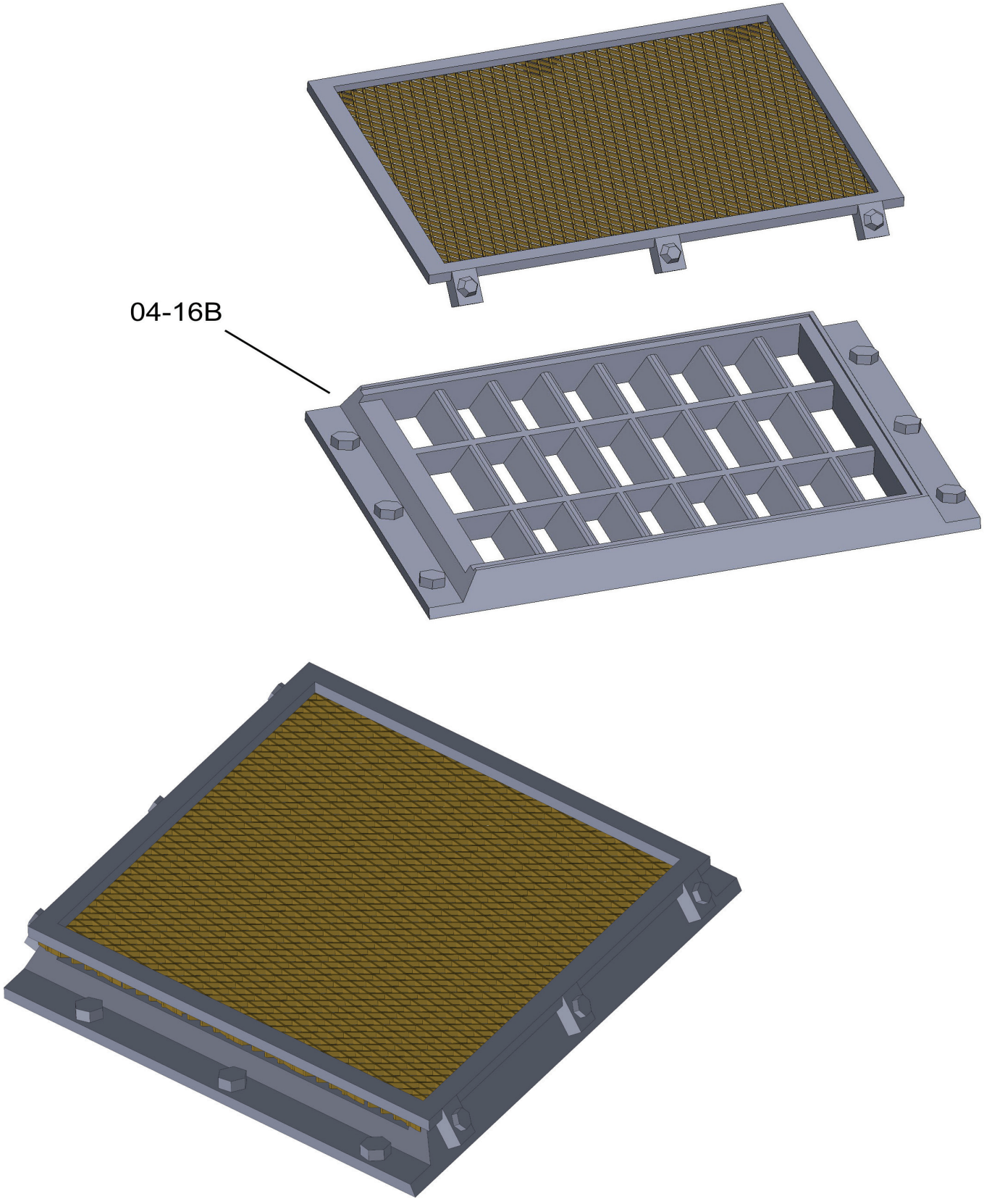

Glue part 04-16B.

Chapter 04 - Upper hull

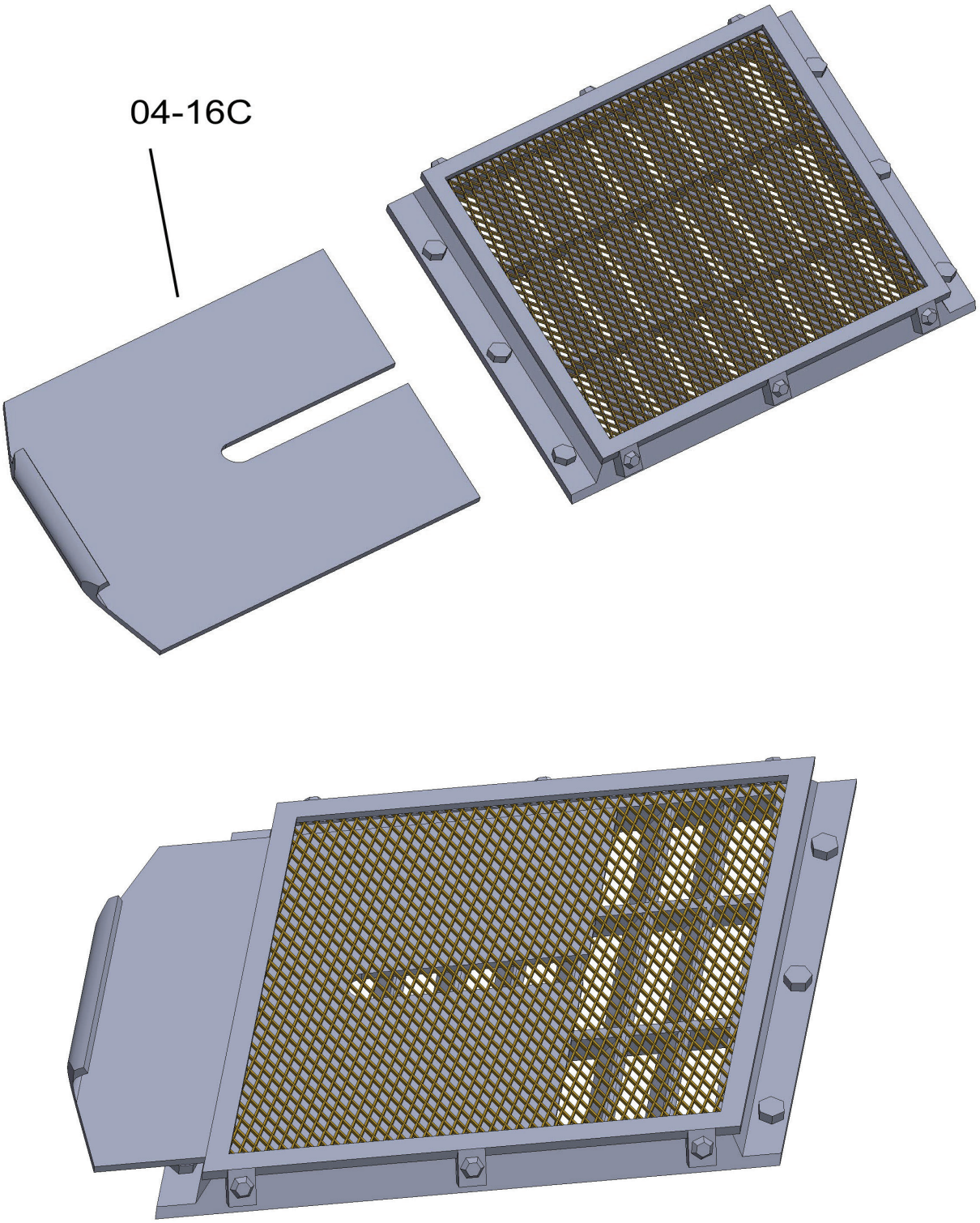

Slide part 04-16C between the part 04-16B and the net. Do not glue the part.

Chapter 04 - Upper hull

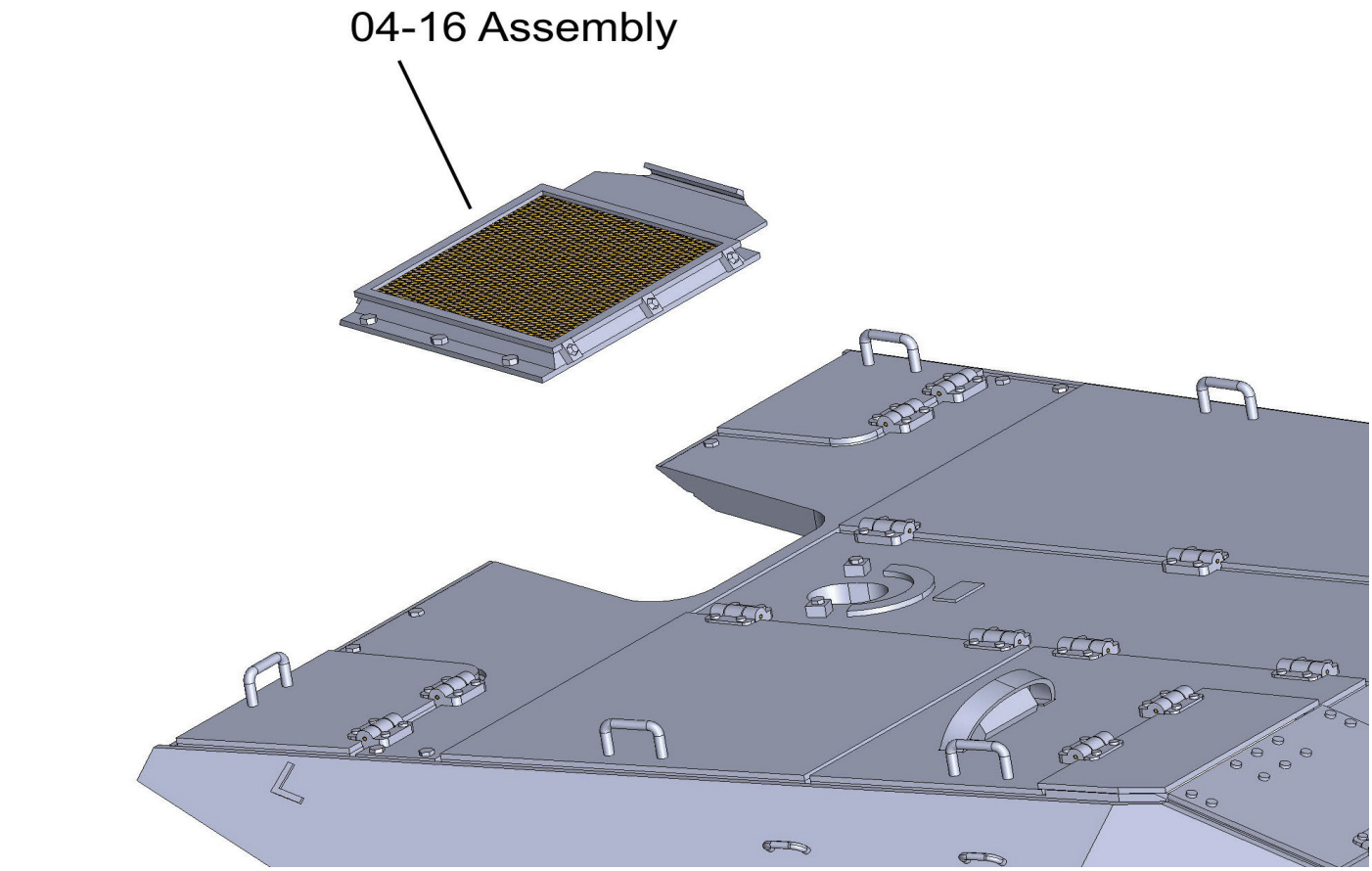

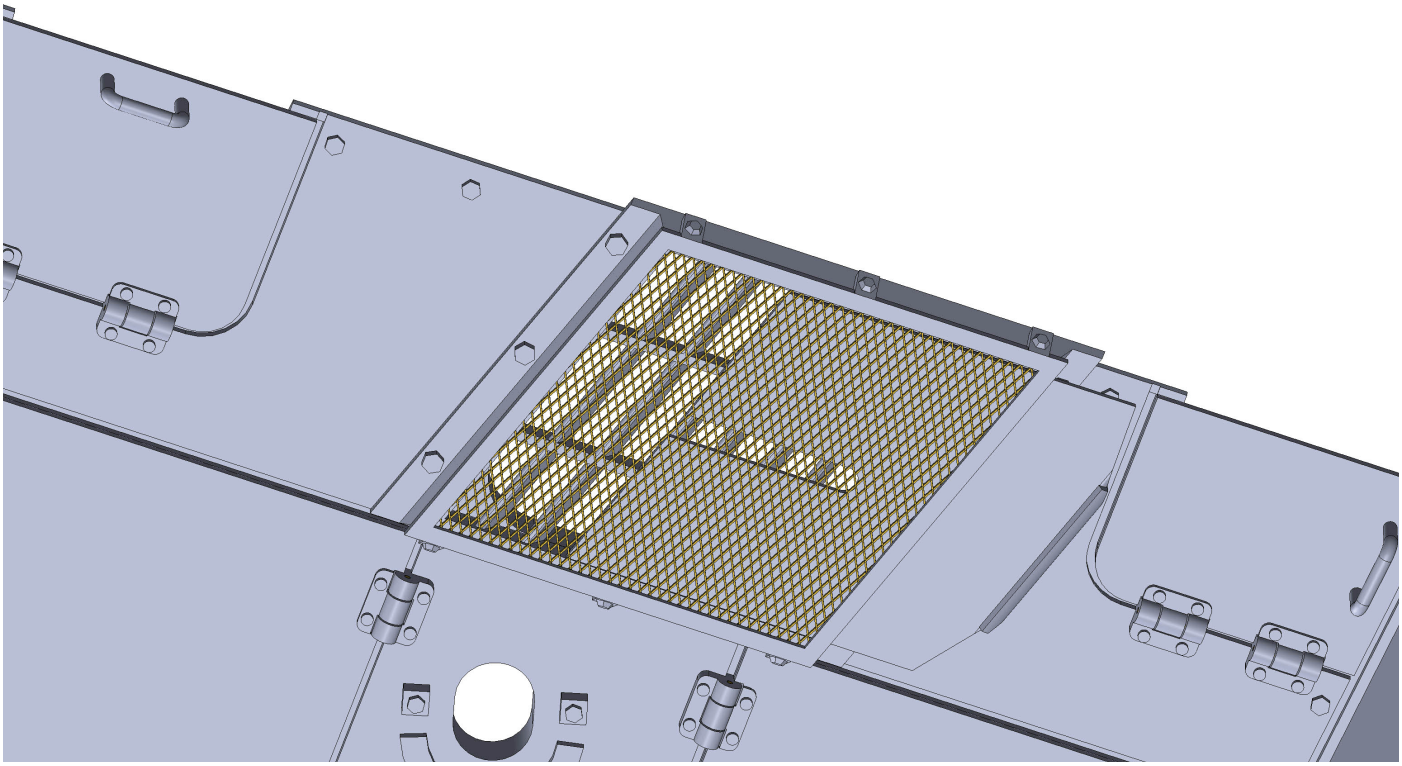

Glue subassembly 04-16 to part 04-01.

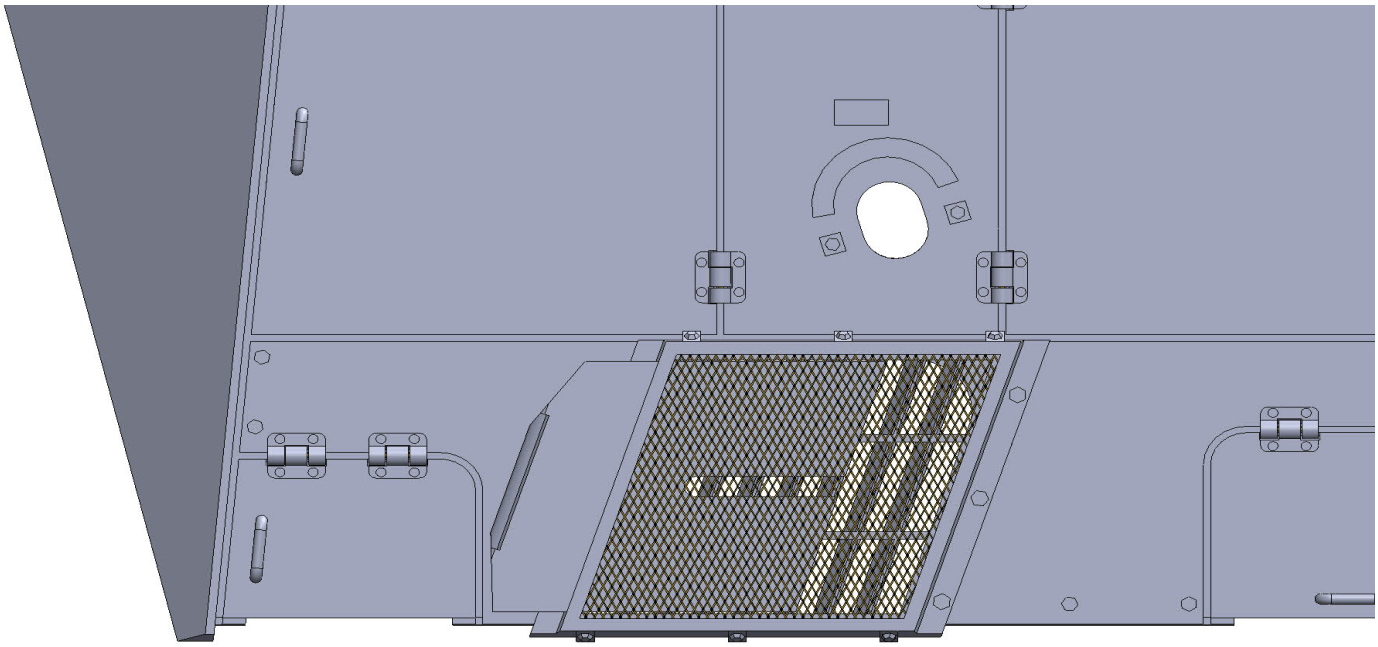

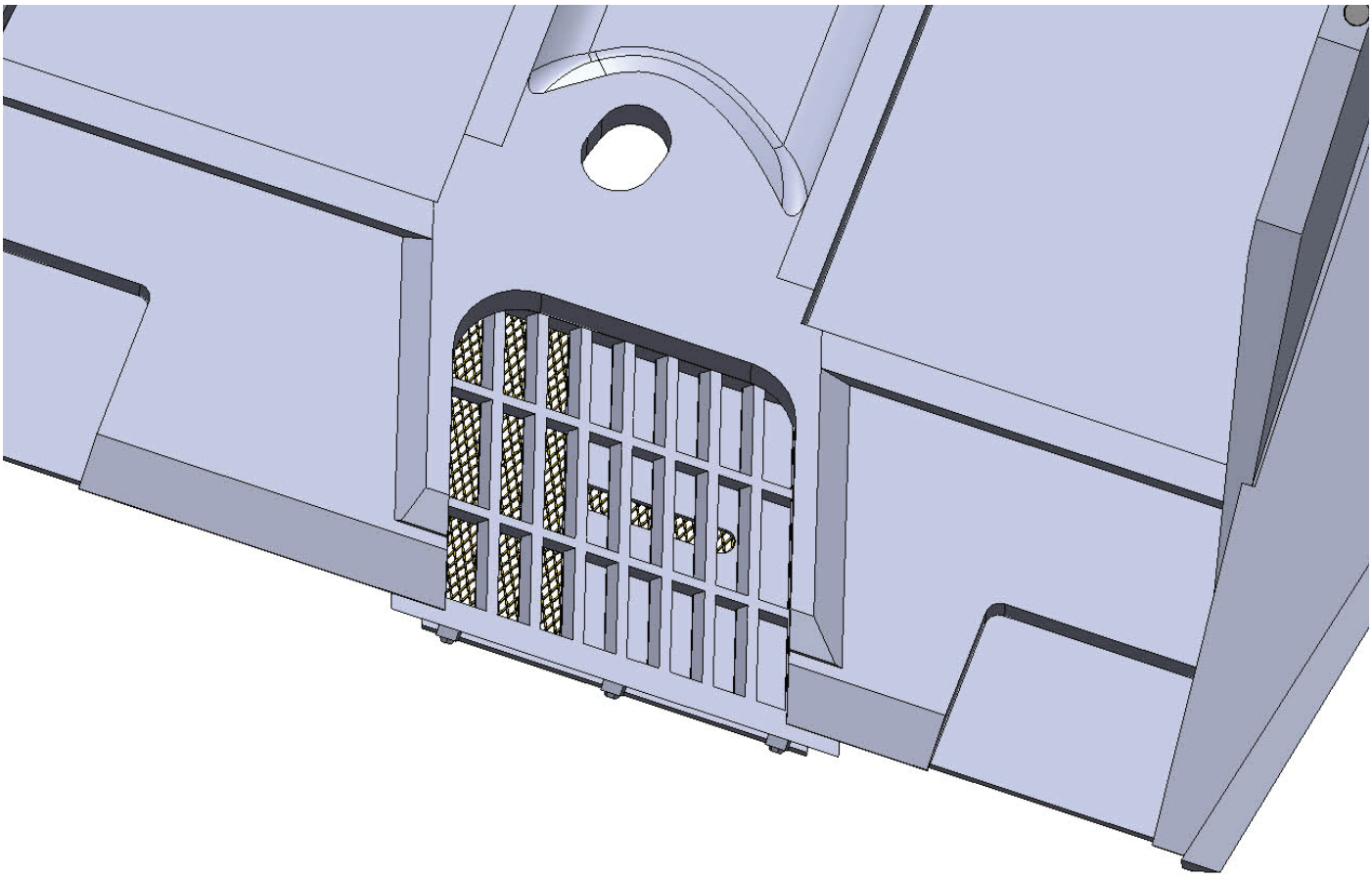

Additional Views for Subassembly Installation 04-16.

Chapter 04 - Upper hull

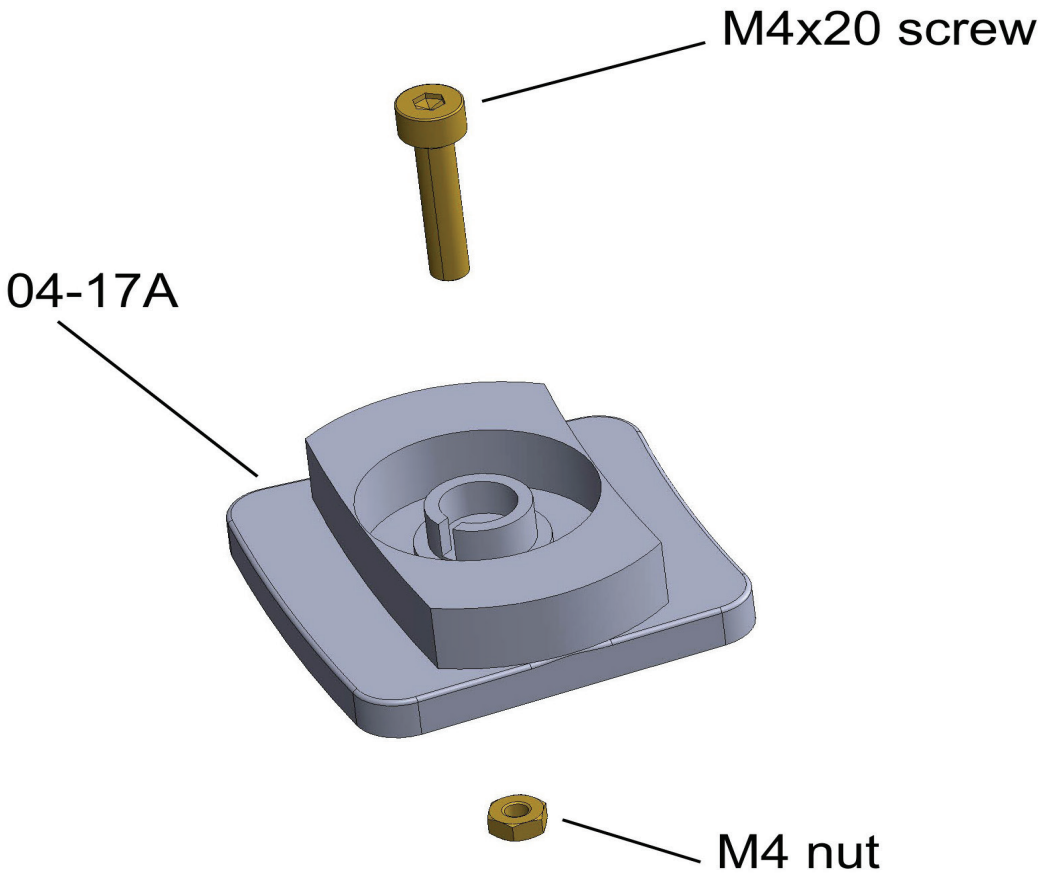

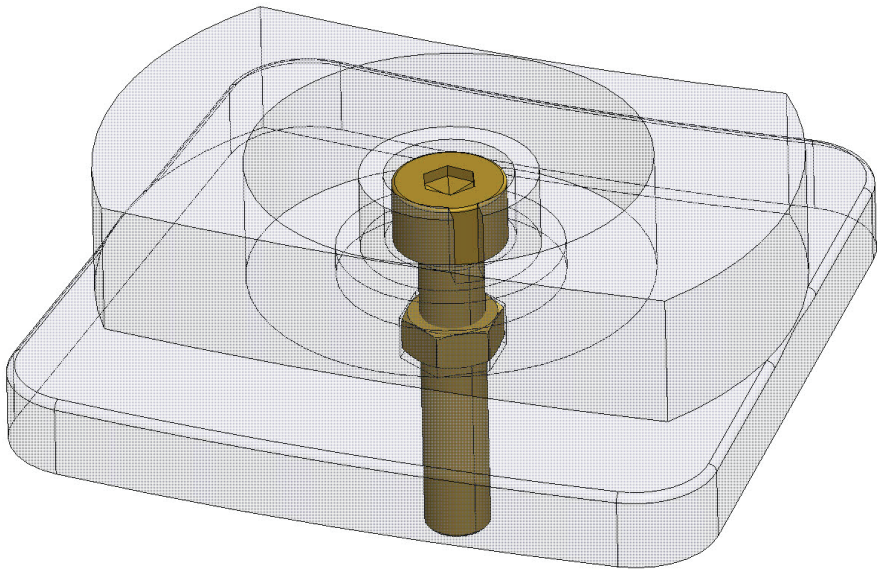

Insert the M4x20 screw into part 04-17A. Secure with M4 nut.

Chapter 04 - Upper hull

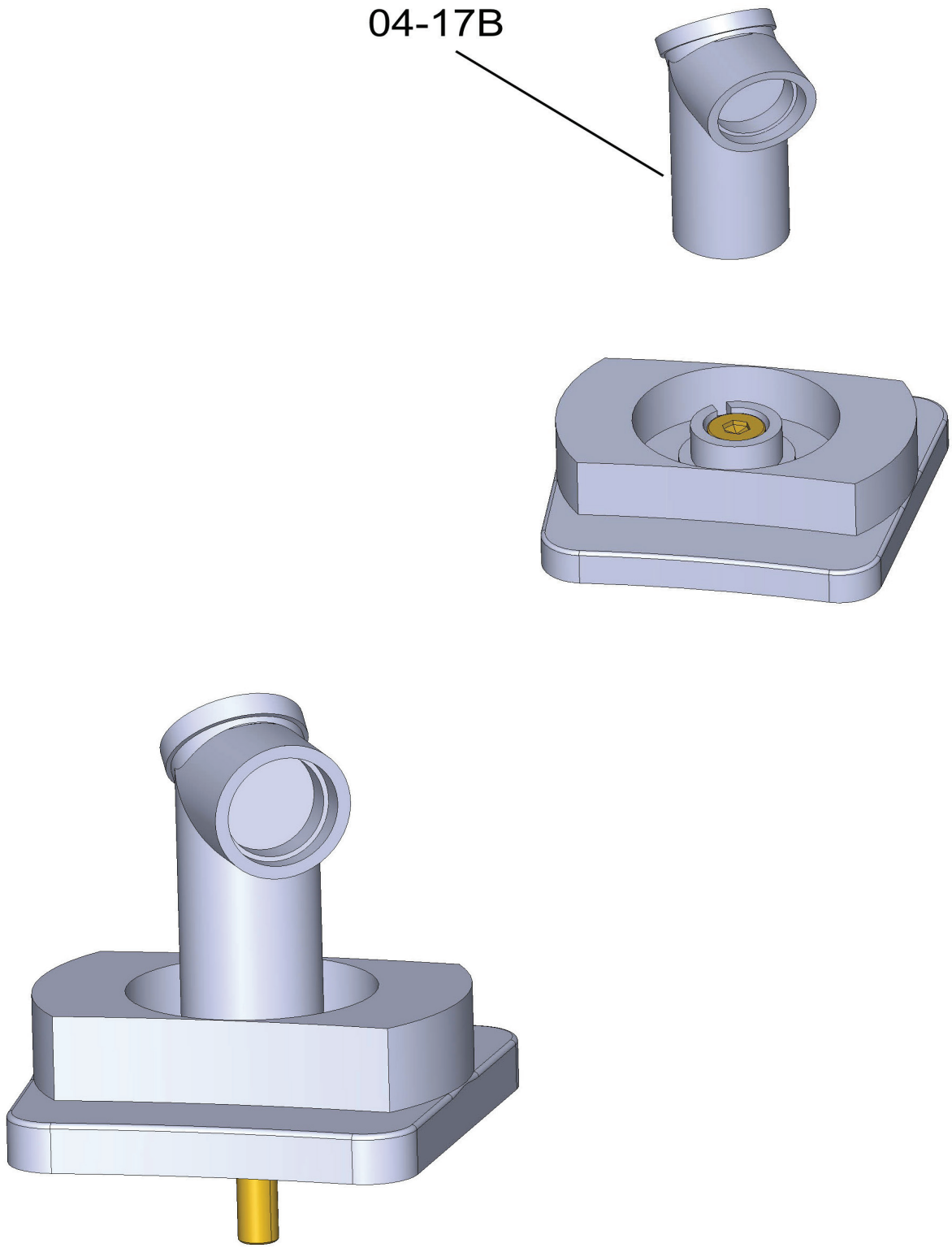

Glue part 04-17B to part 04-17A.
Use transparent sheet to emulate glass on the periscope.

Chapter 04 - Upper hull

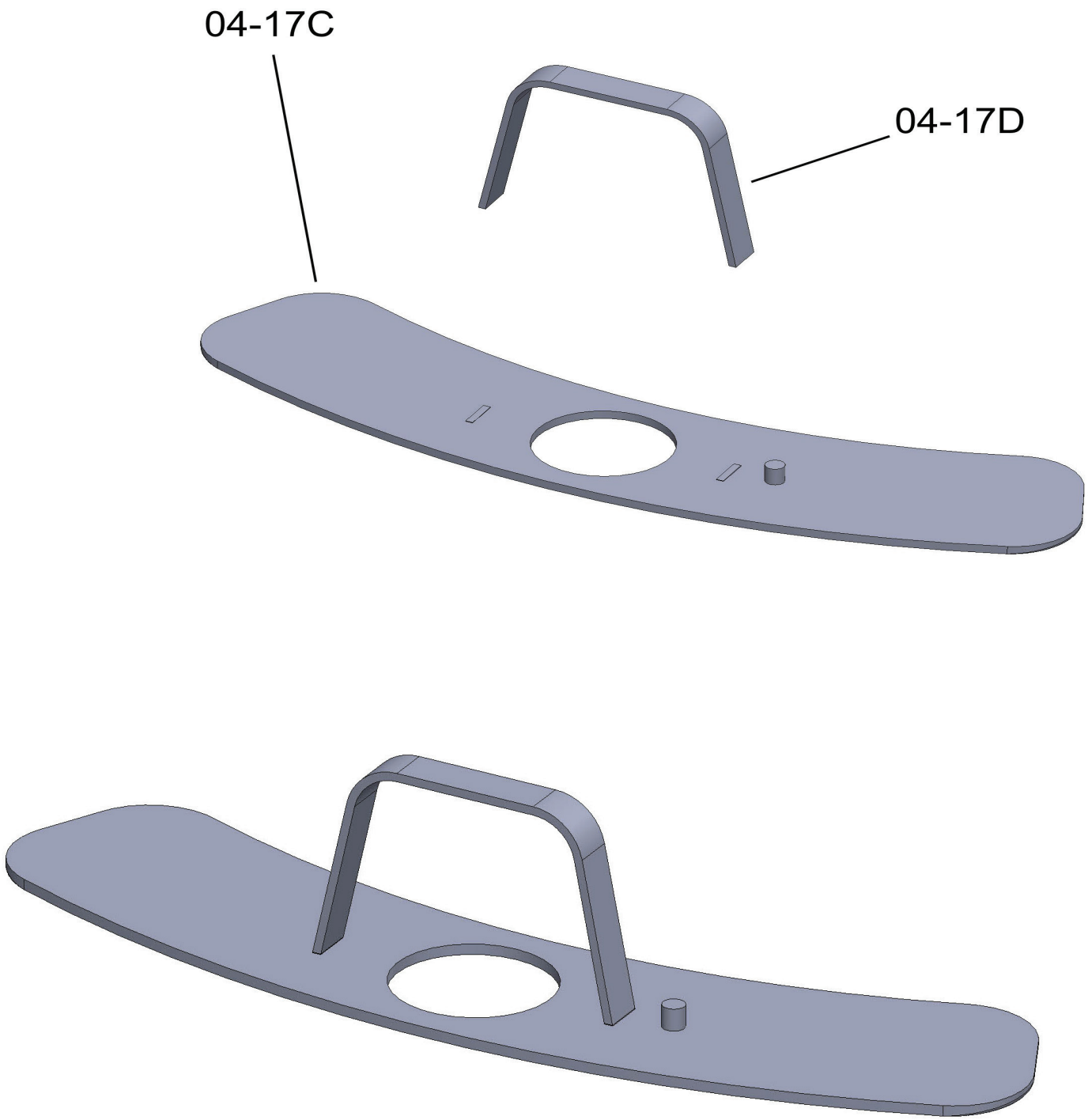

Glue parts 04-17C and 04-17D.

Chapter 04 - Upper hull

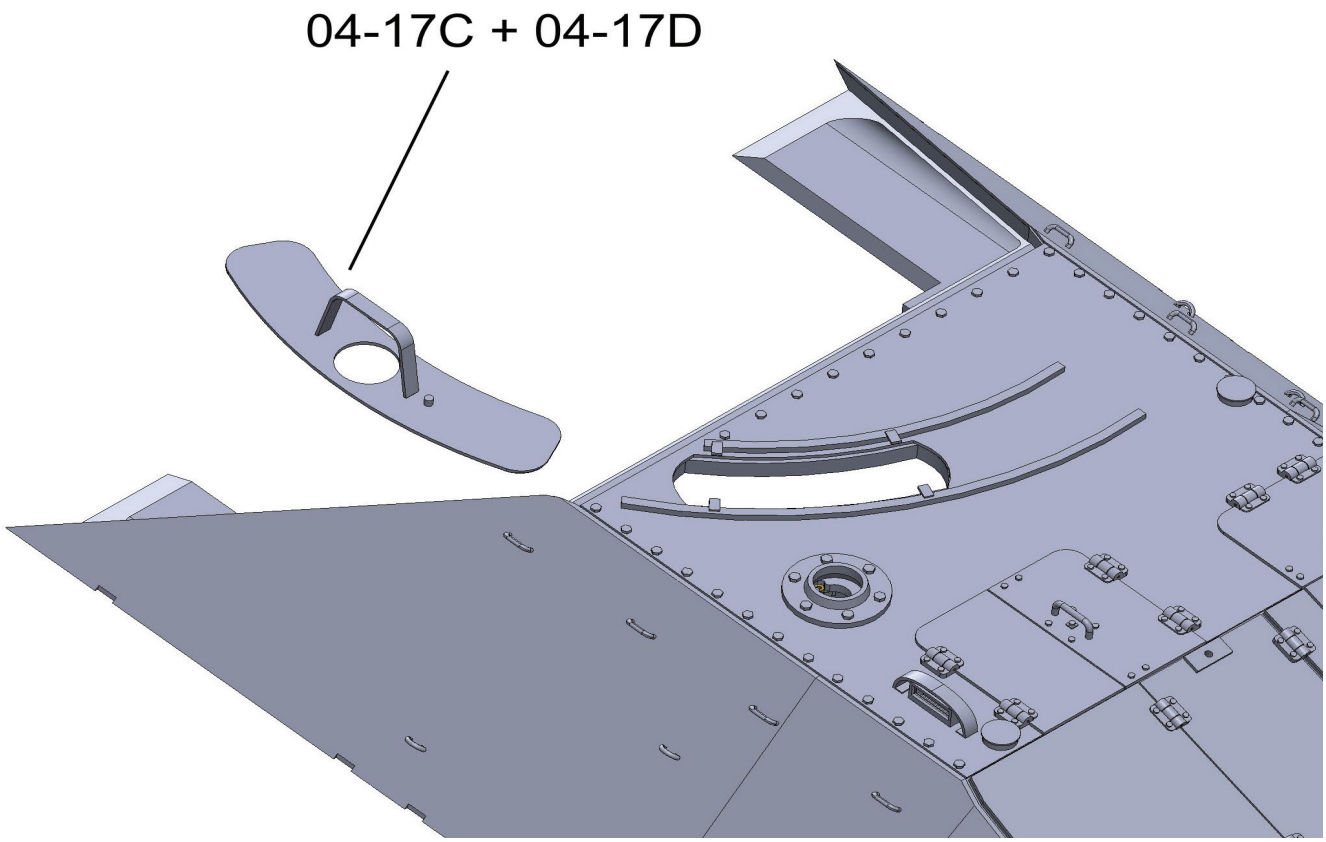

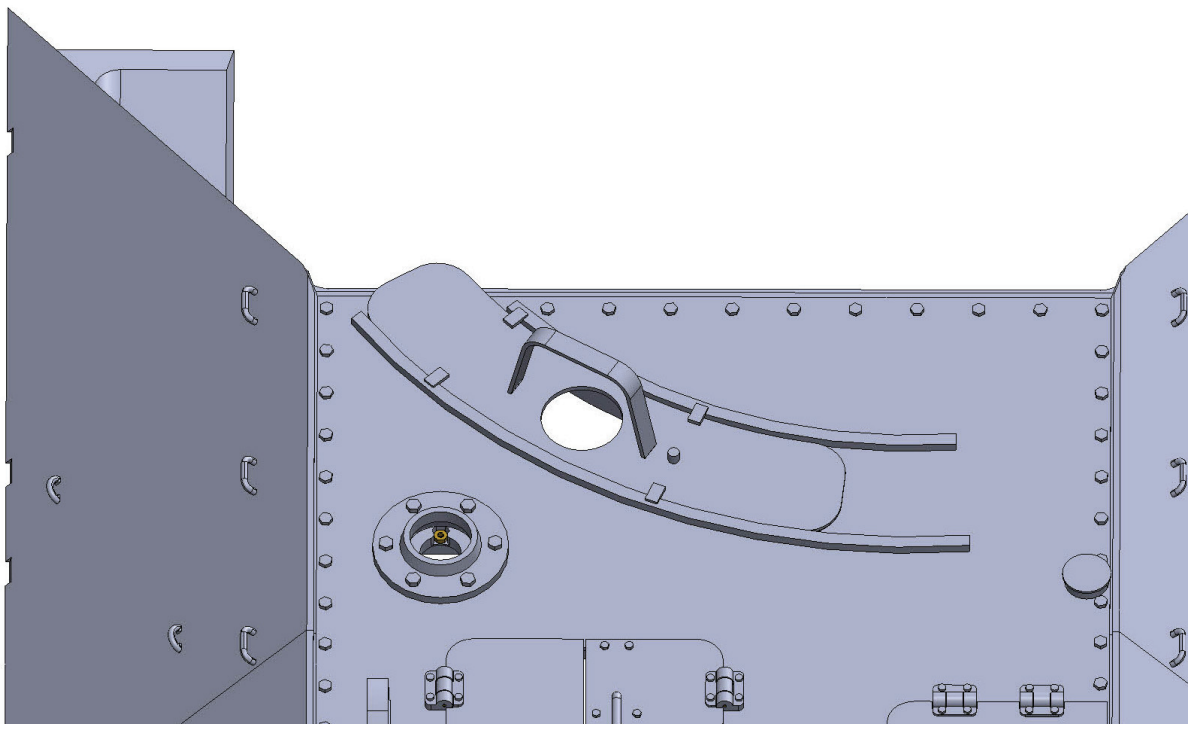

Carefully slide part 04-17C into part 04-03.

Chapter 04 - Upper hull

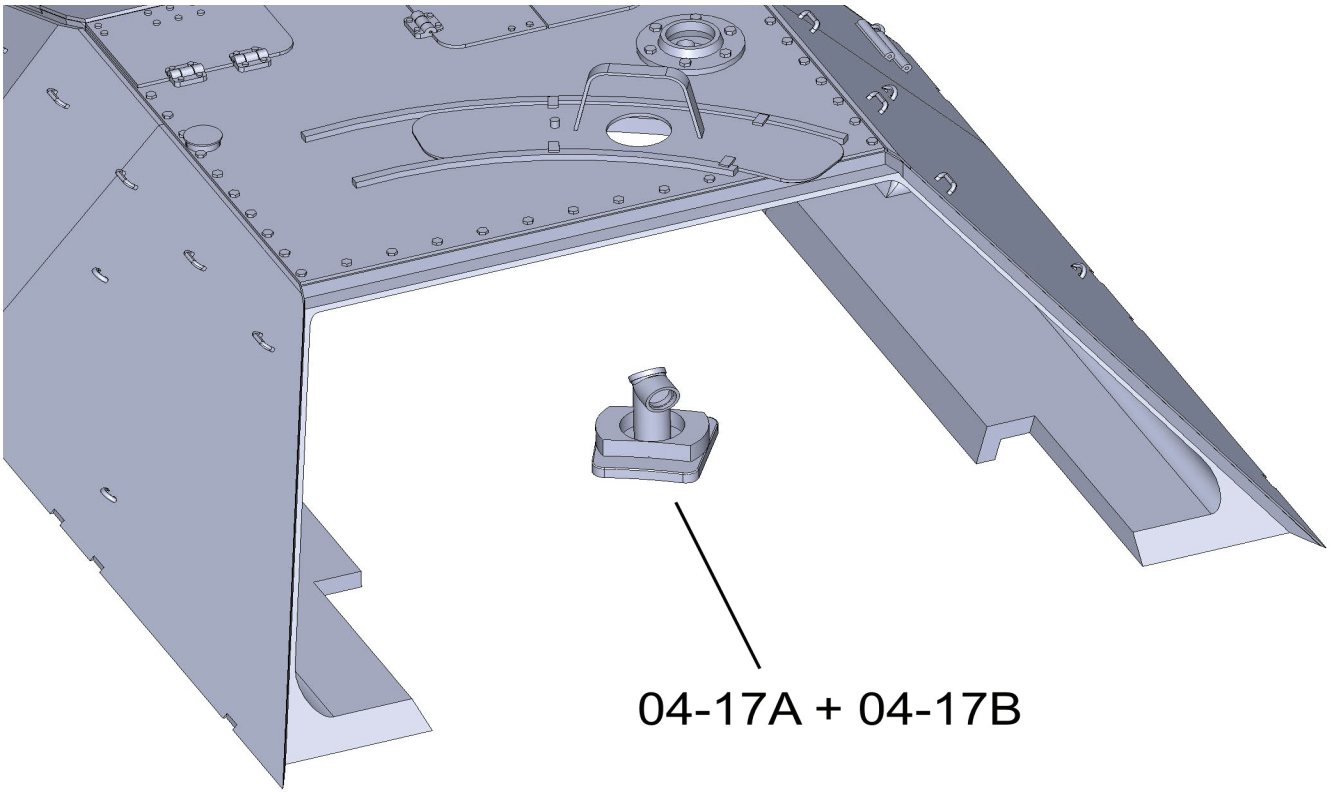

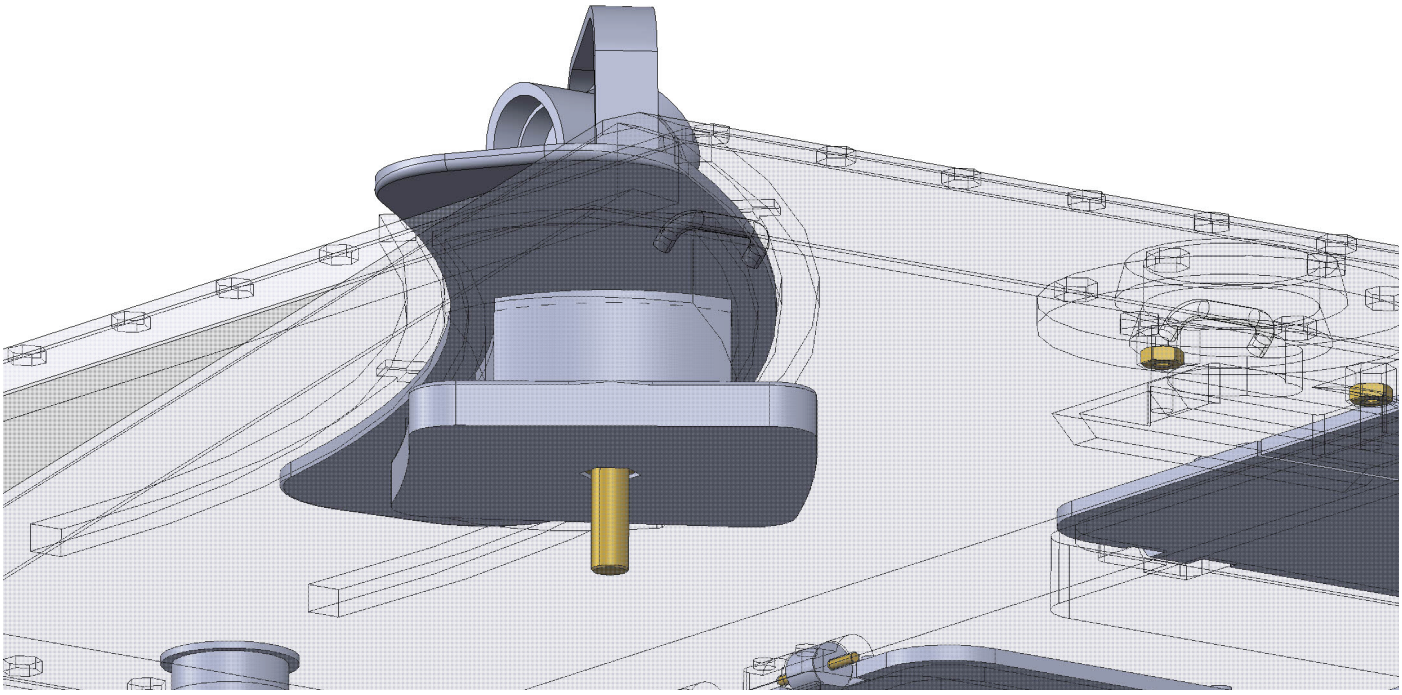

Glue 04-17A on the bottom of part 04-17C.
Before using glue, double check. Part 04-17A must be centered relative to the groove in part 04-01. It must move freely in the groove.
It is not recommended to glue the part with too strong or fast-drying glue.

Chapter 04 - Upper hull

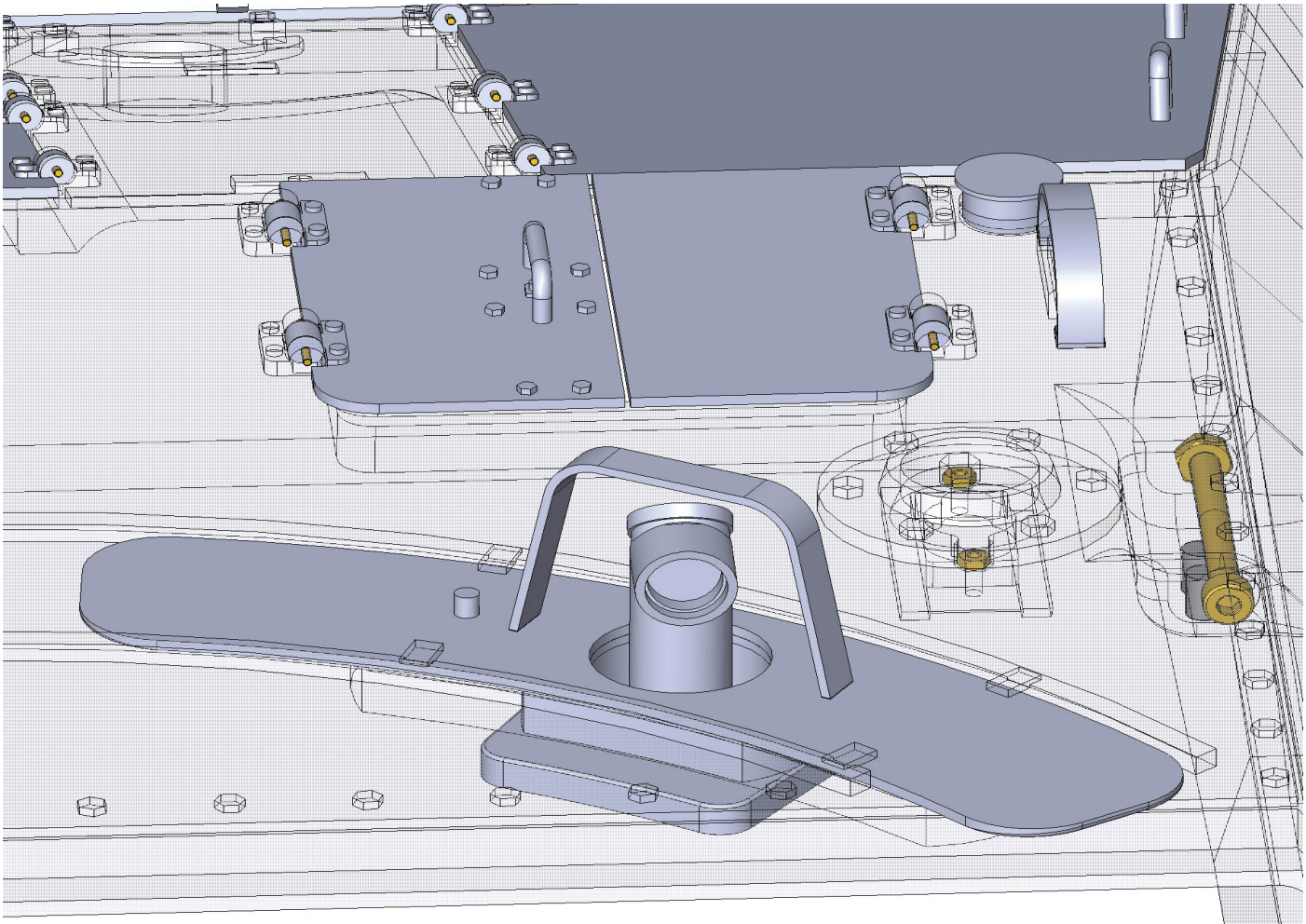

After paintjob and completing the vehicle, we recommend greasing the groove with petroleum jelly or silicone oil.

Chapter 04 - Upper hull

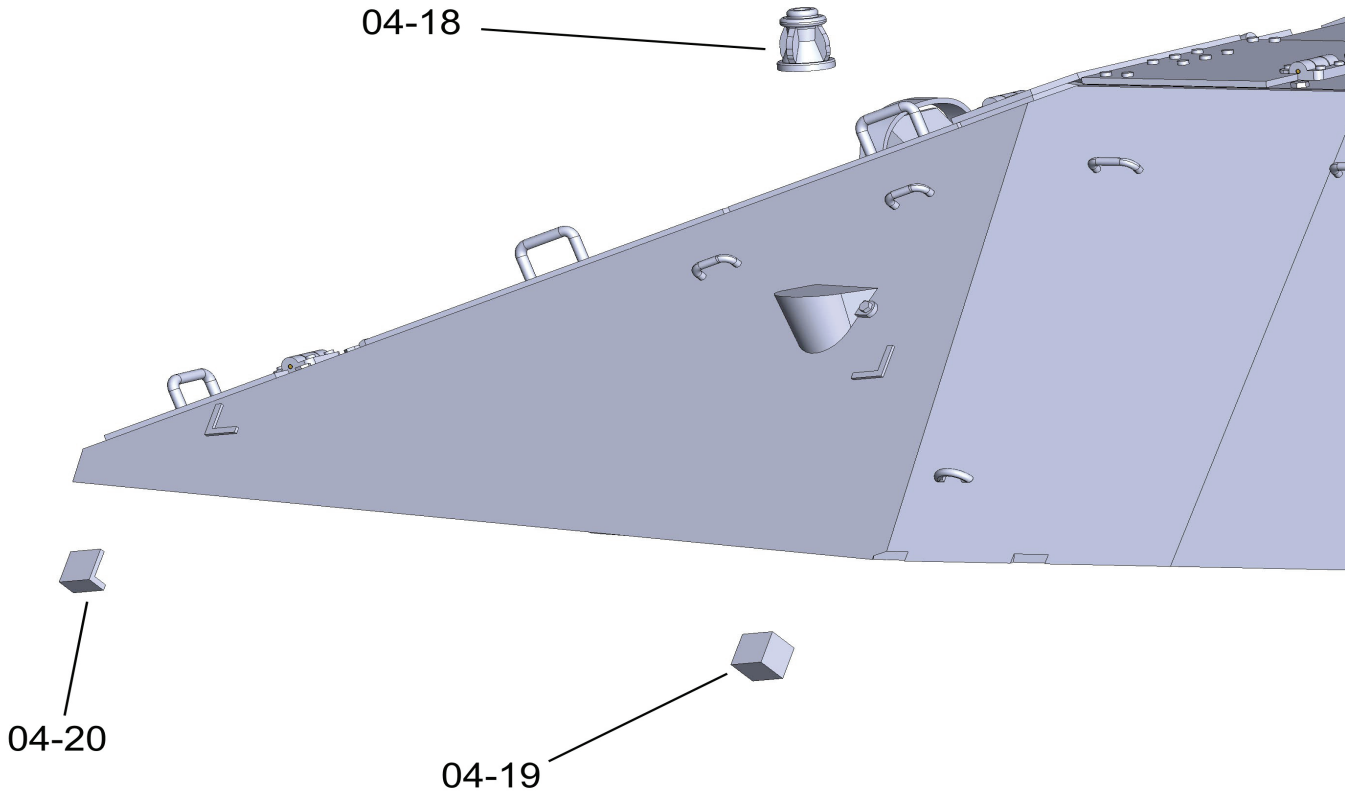

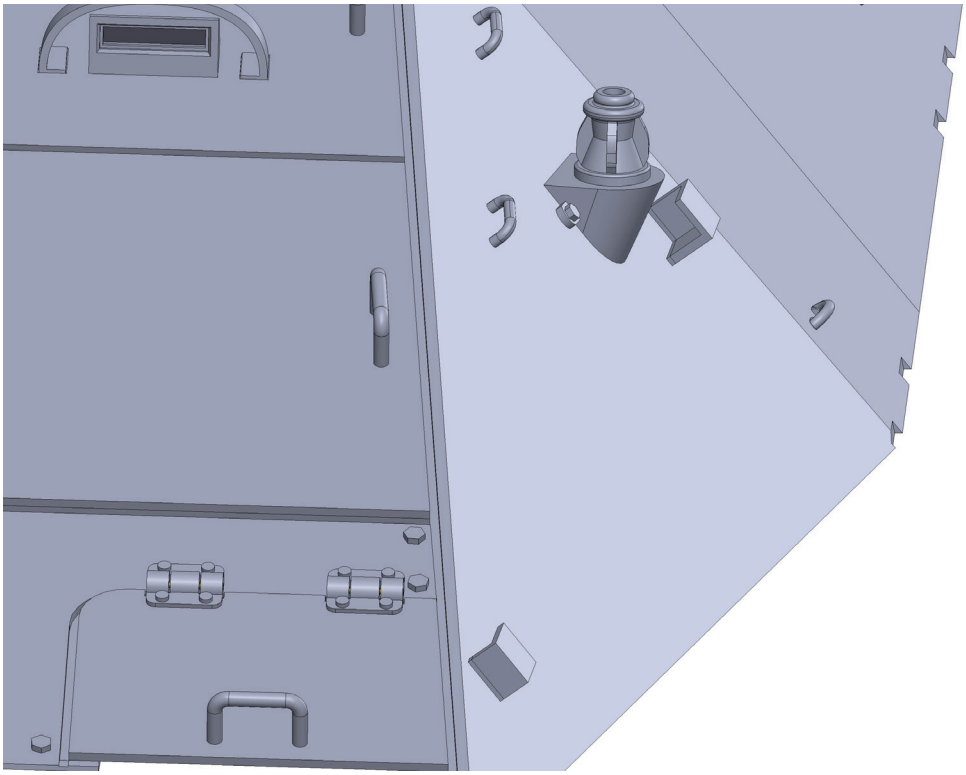

Glue parts 04-18, 04-19 and 04-20. Into the part 04-18, you can insert a piece of wire 2mm in diameter and 135mm in length, which will serve as an antenna imitation.

Chapter 04 - Upper hull

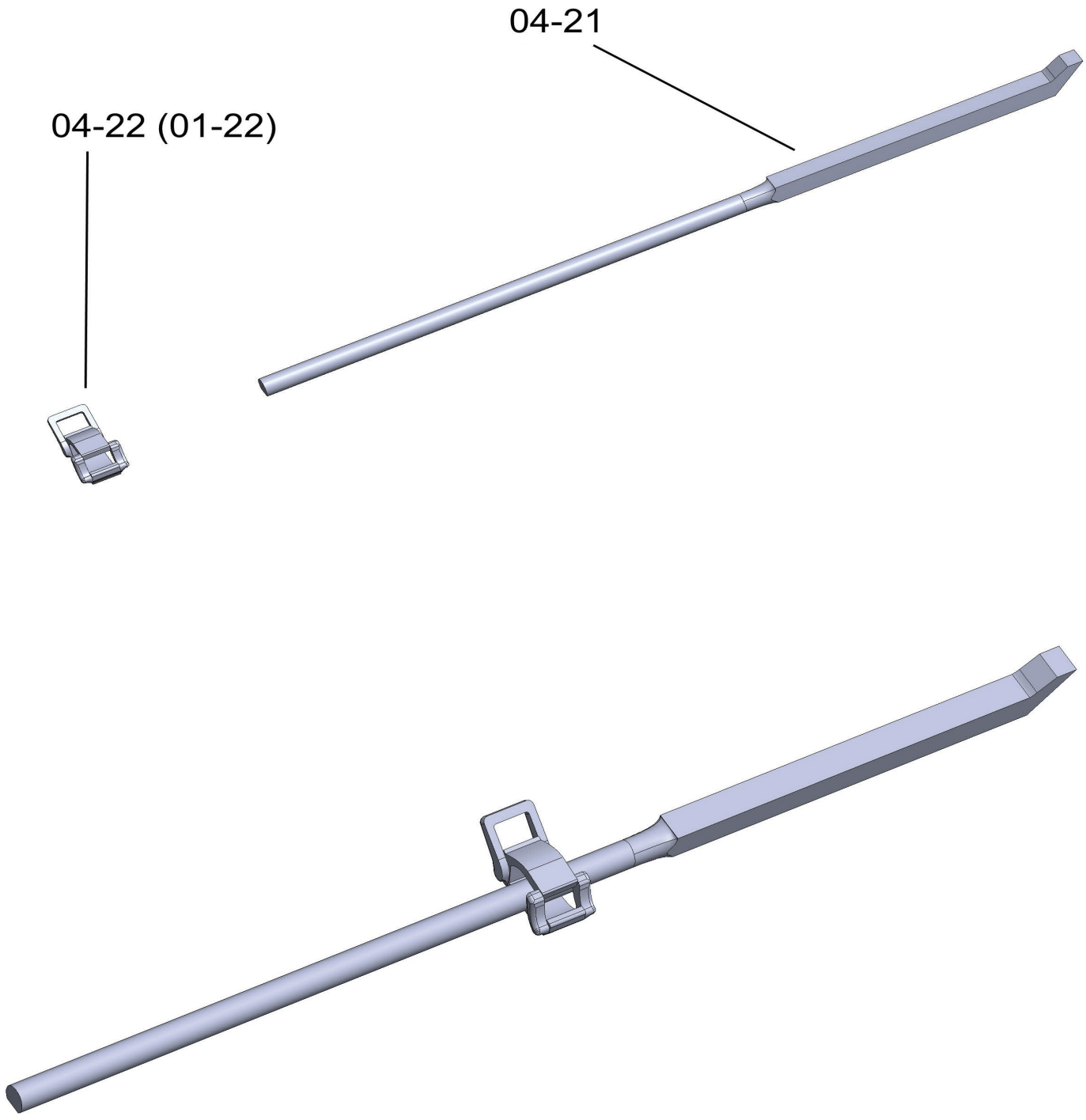

Glue parts 04-21 and 04-22.
Part 04-22 is identical to part 01-22.

Chapter 04 - Upper hull

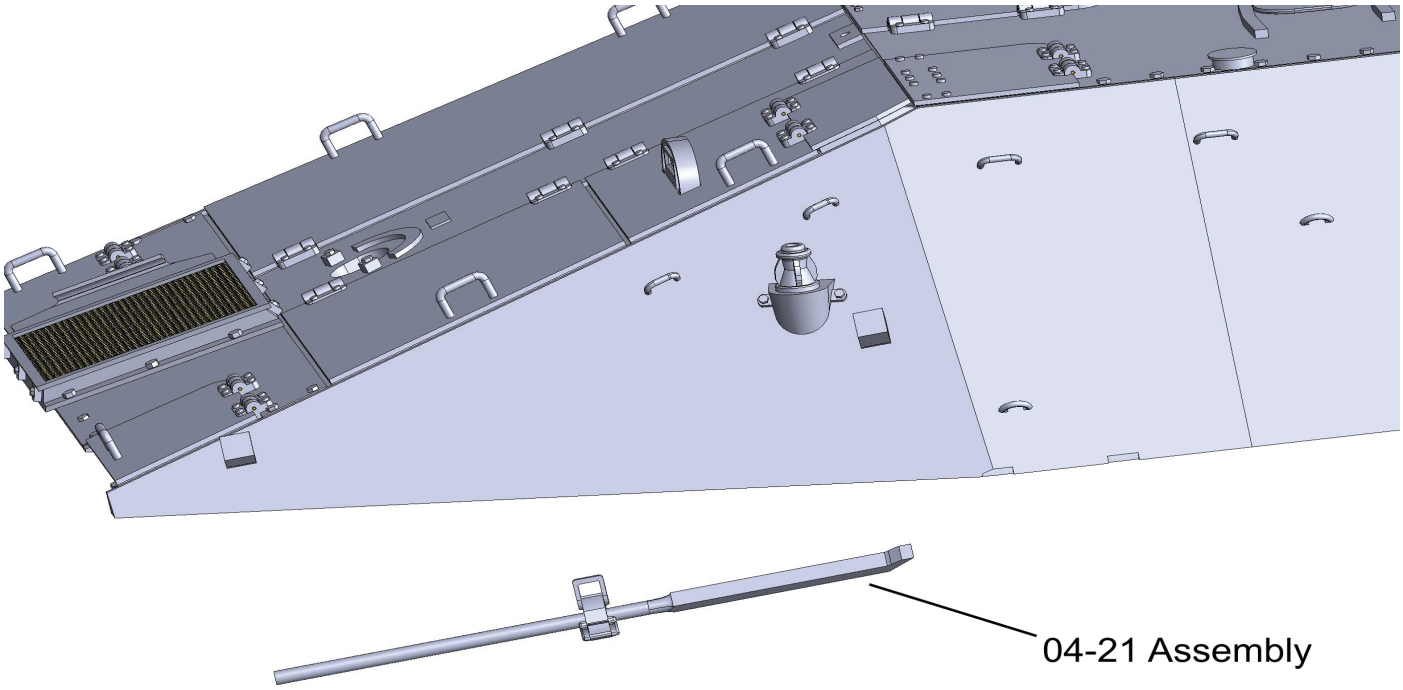

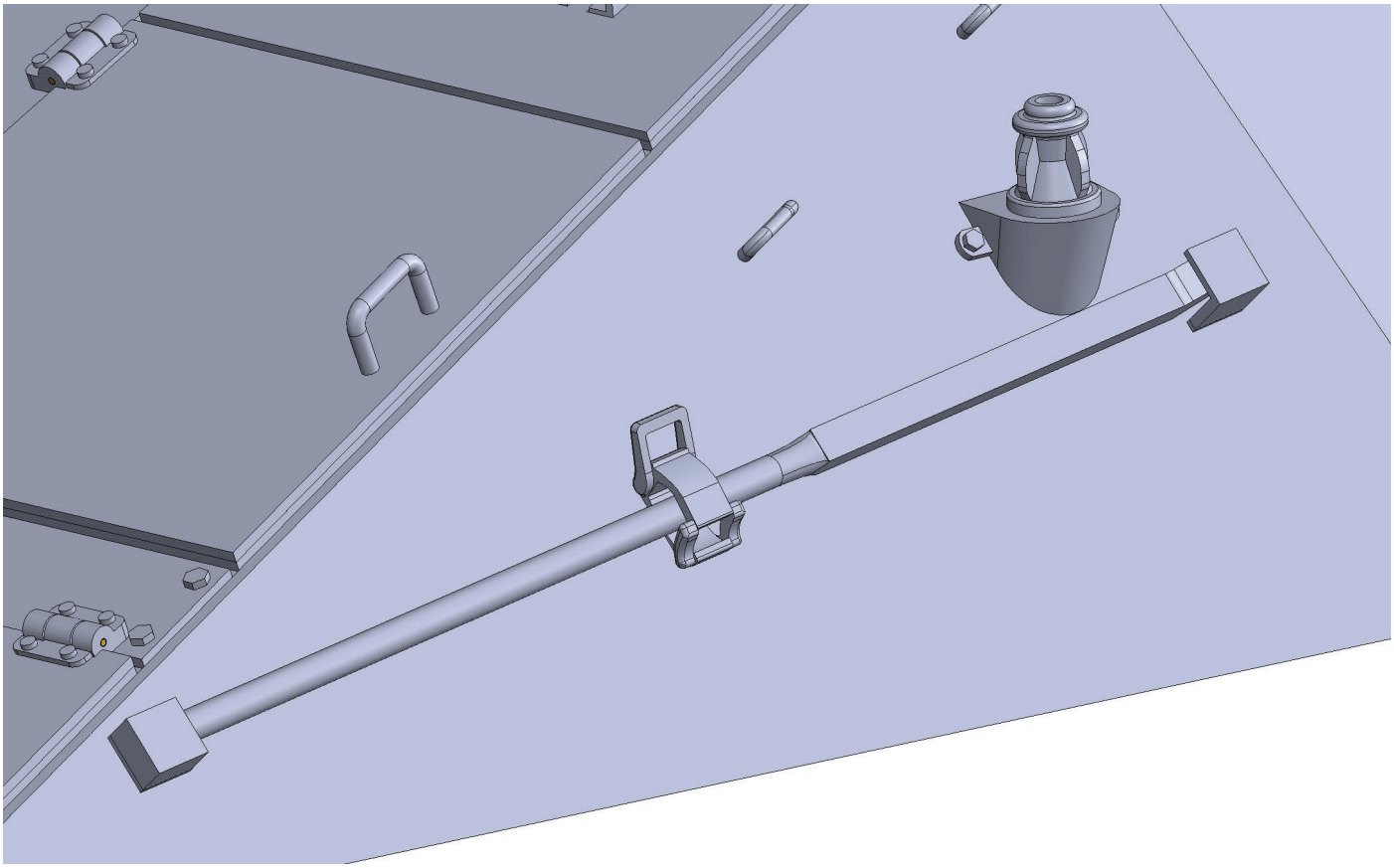

Glue the unit on part 04-01.

Chapter 04 - Upper hull

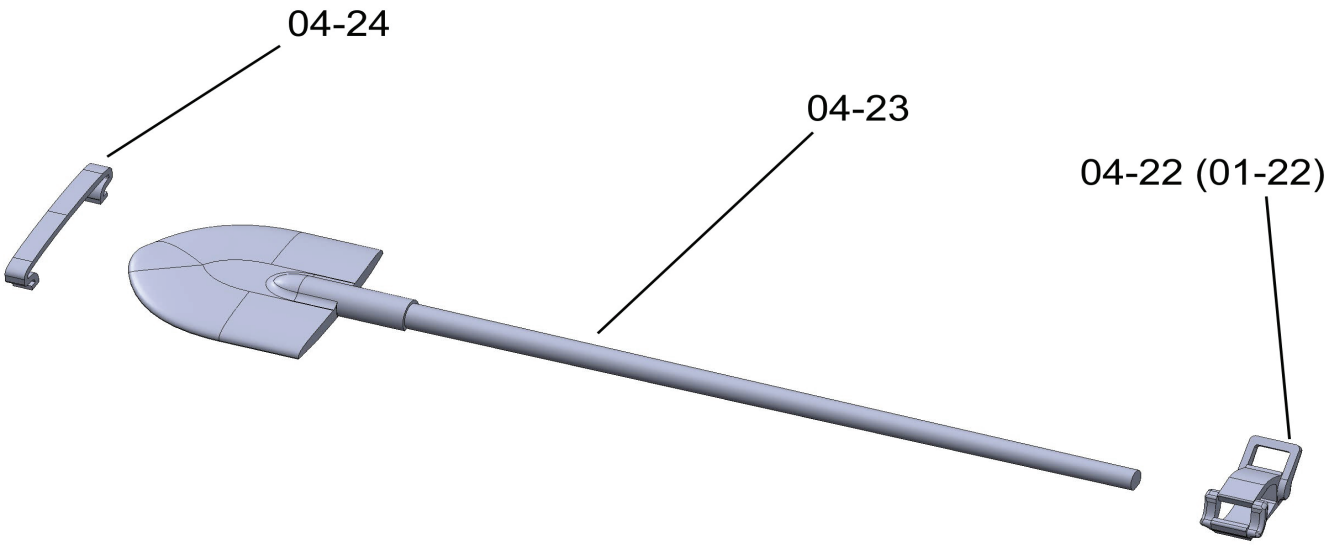

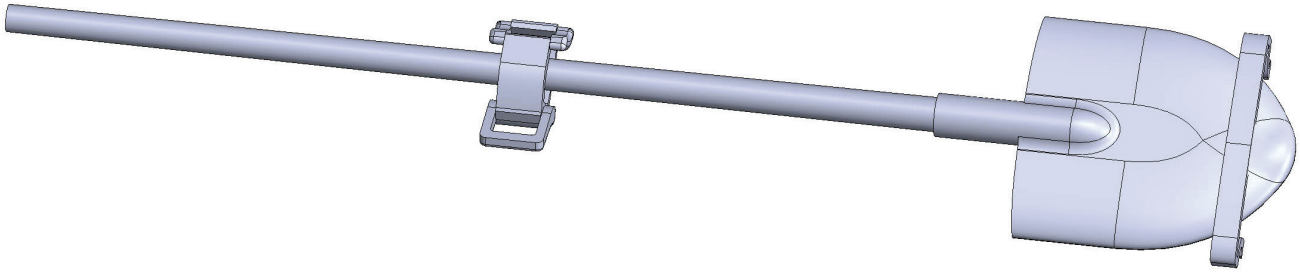

Glue parts 04-22, 04-23 and 04-24 together.

Chapter 04 - Upper hull

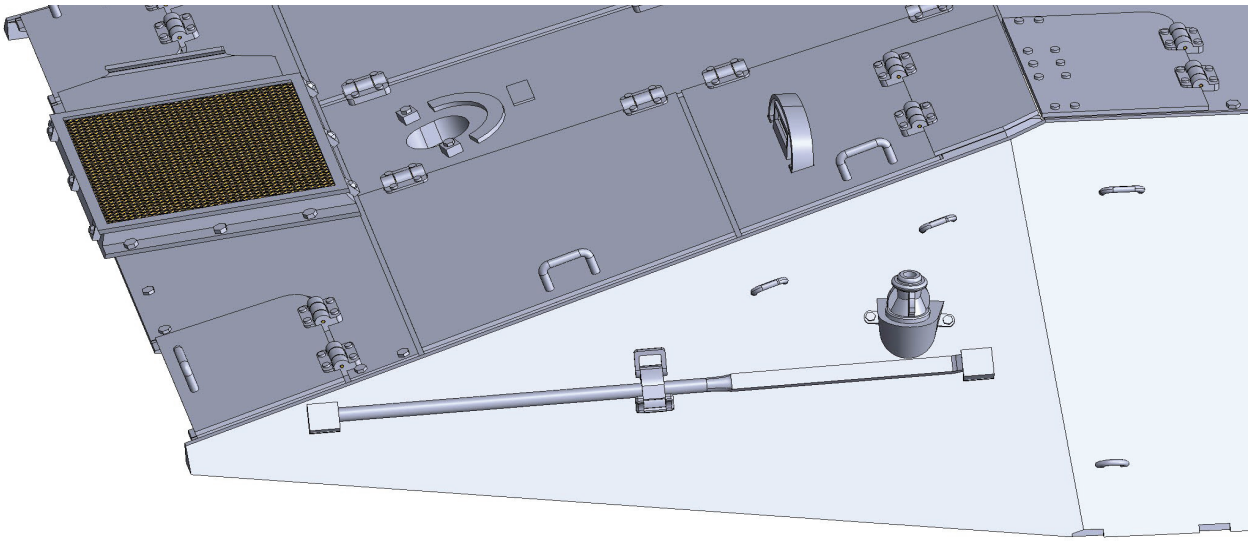

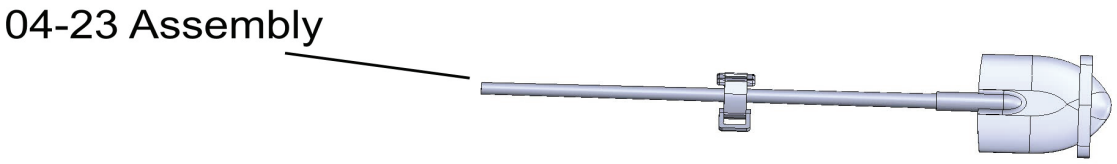

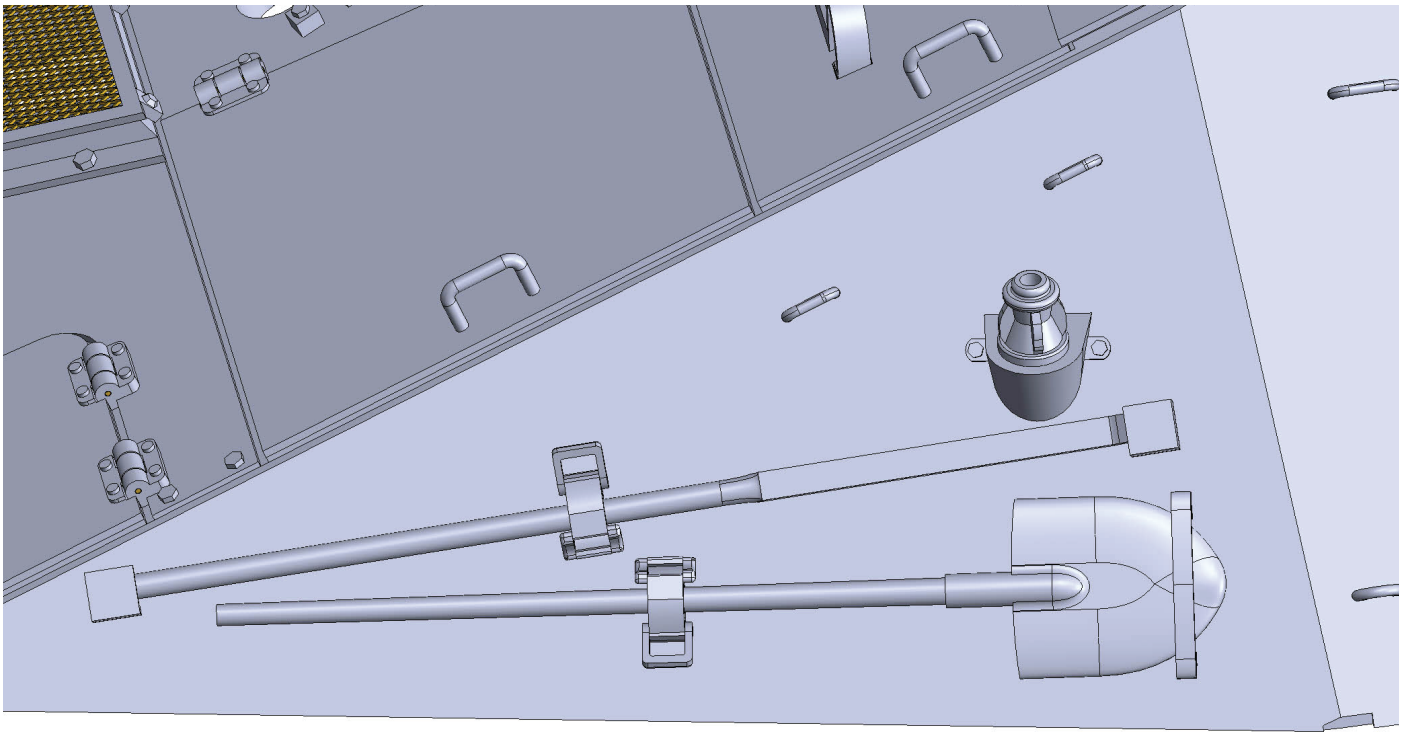

Glue the unit to the part 04-01.

Chapter 04 - Upper hull

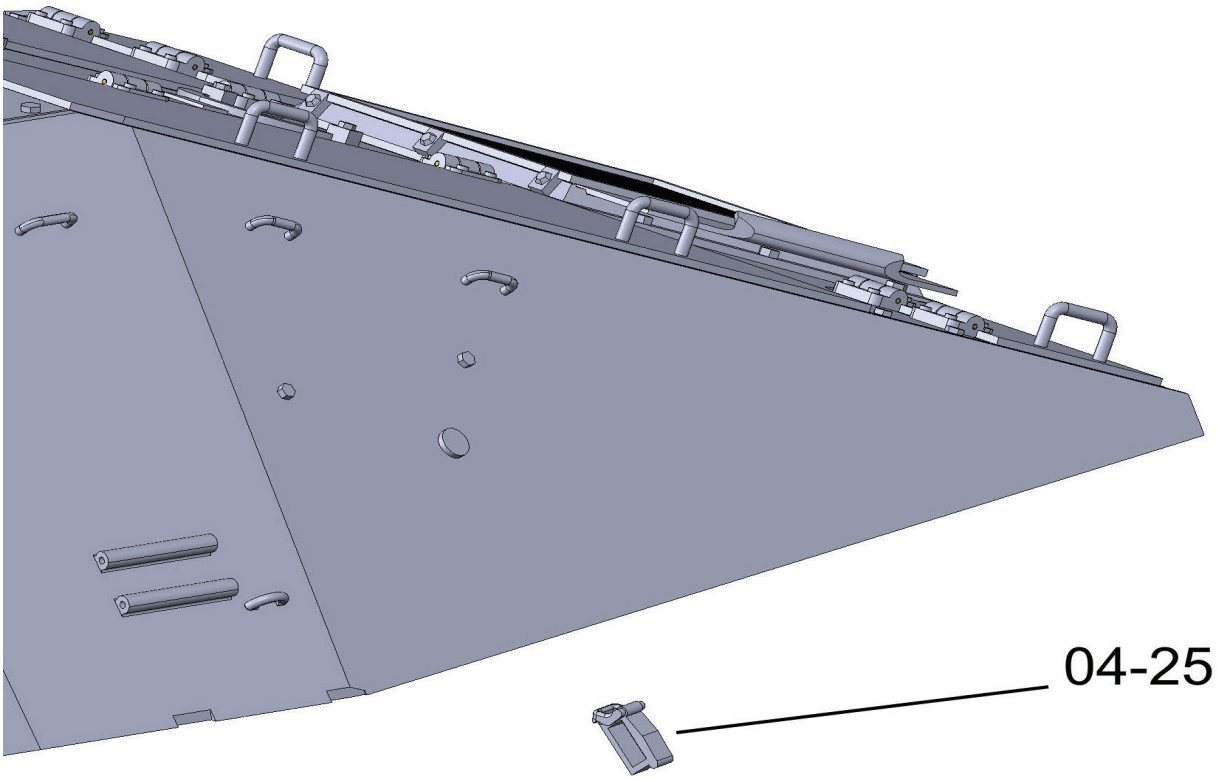

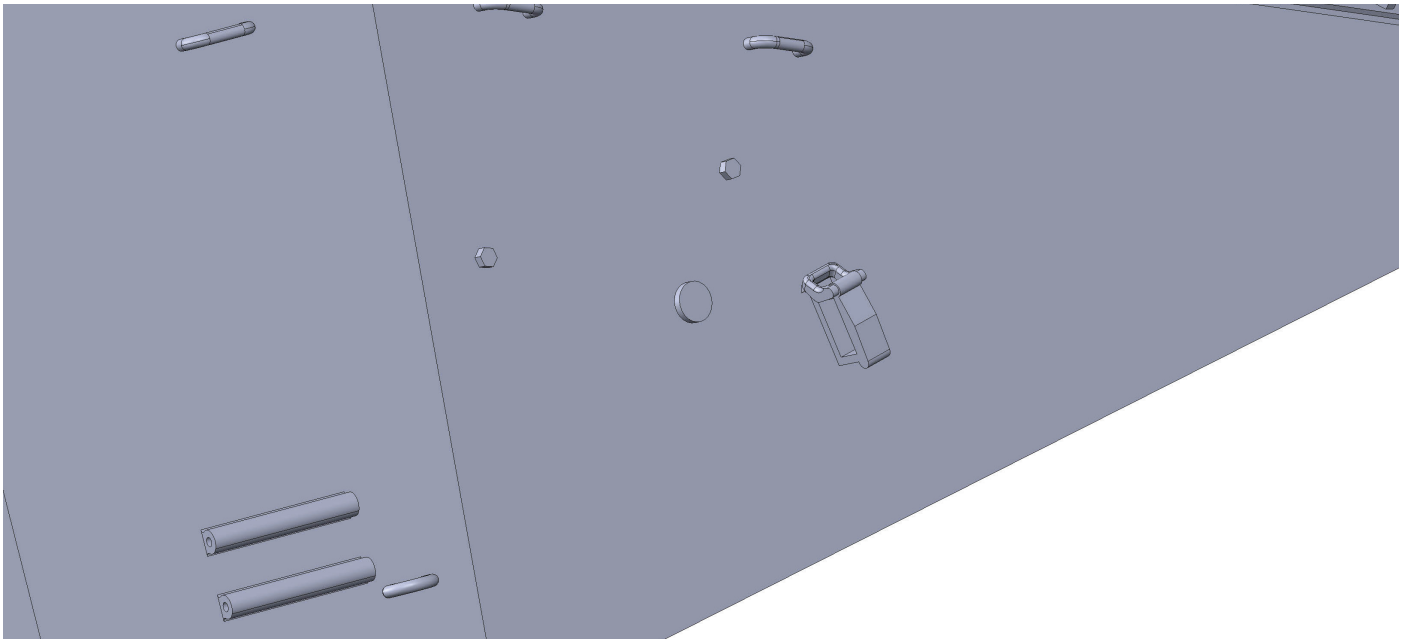

Glue part 04-25.

Chapter 04 - Upper hull

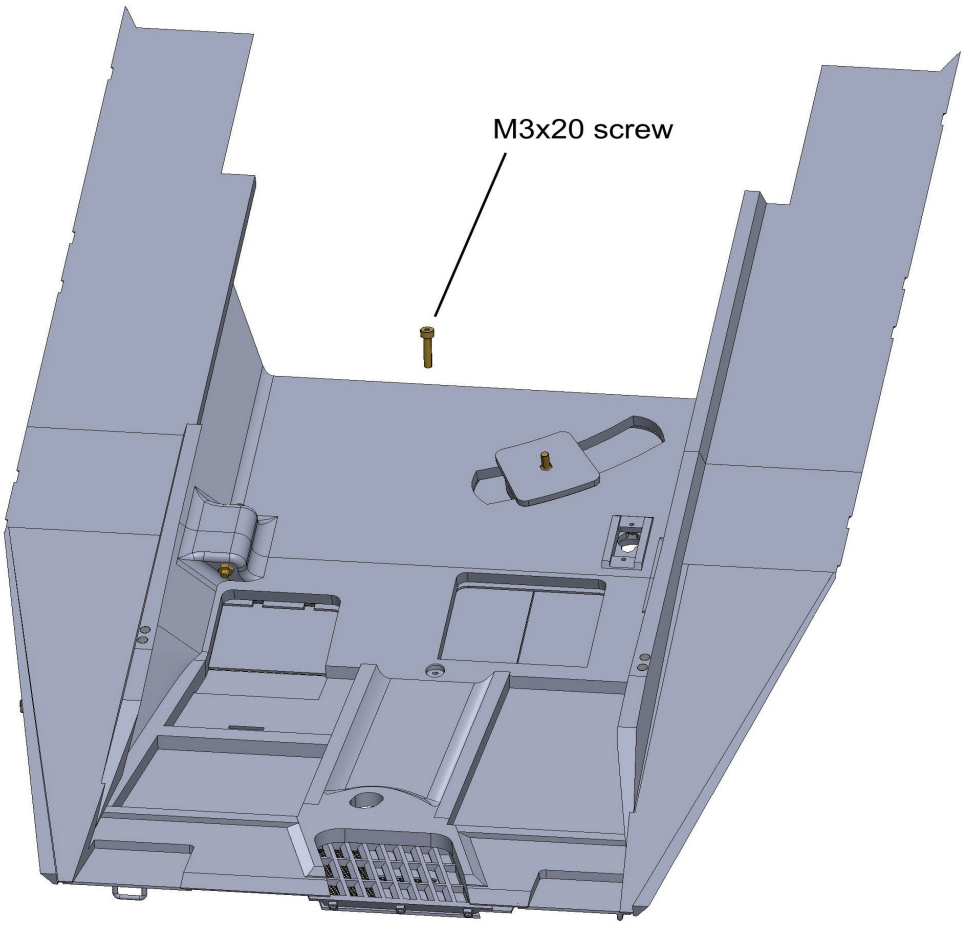

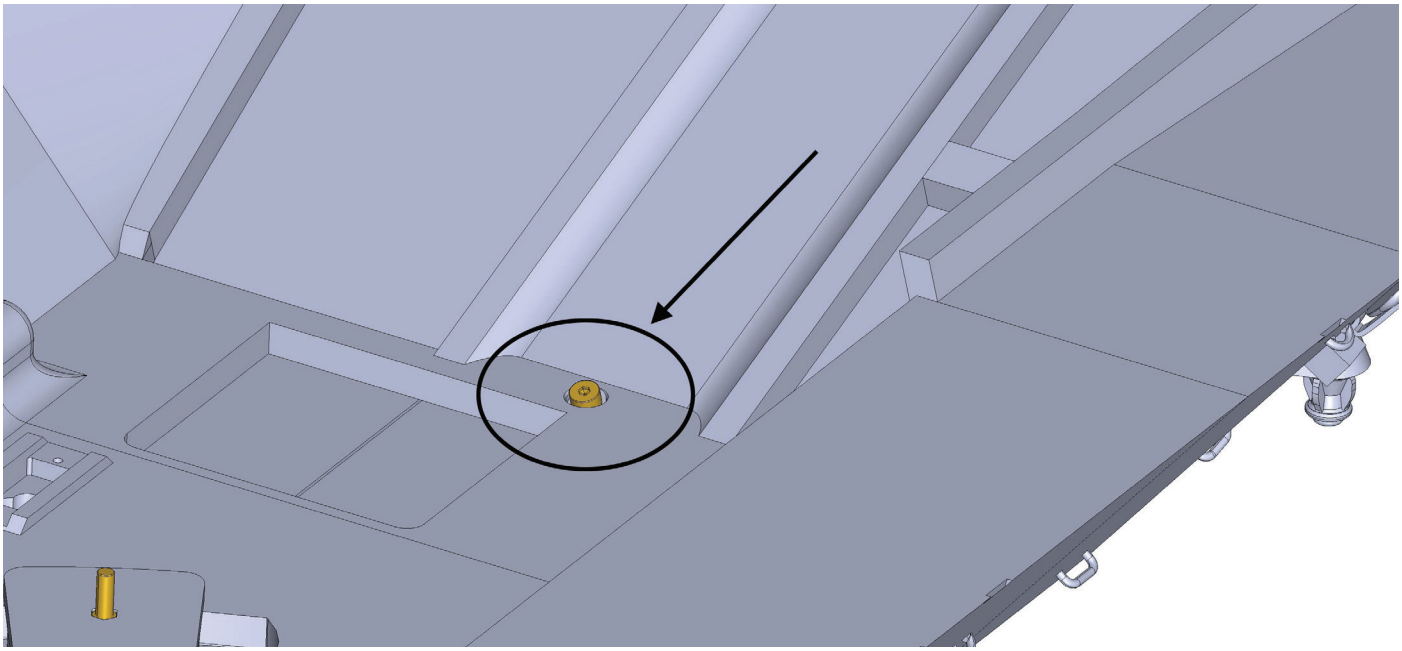

Insert the M1.6x12 screw into the hole in part 04-01.

Chapter 04 - Upper hull

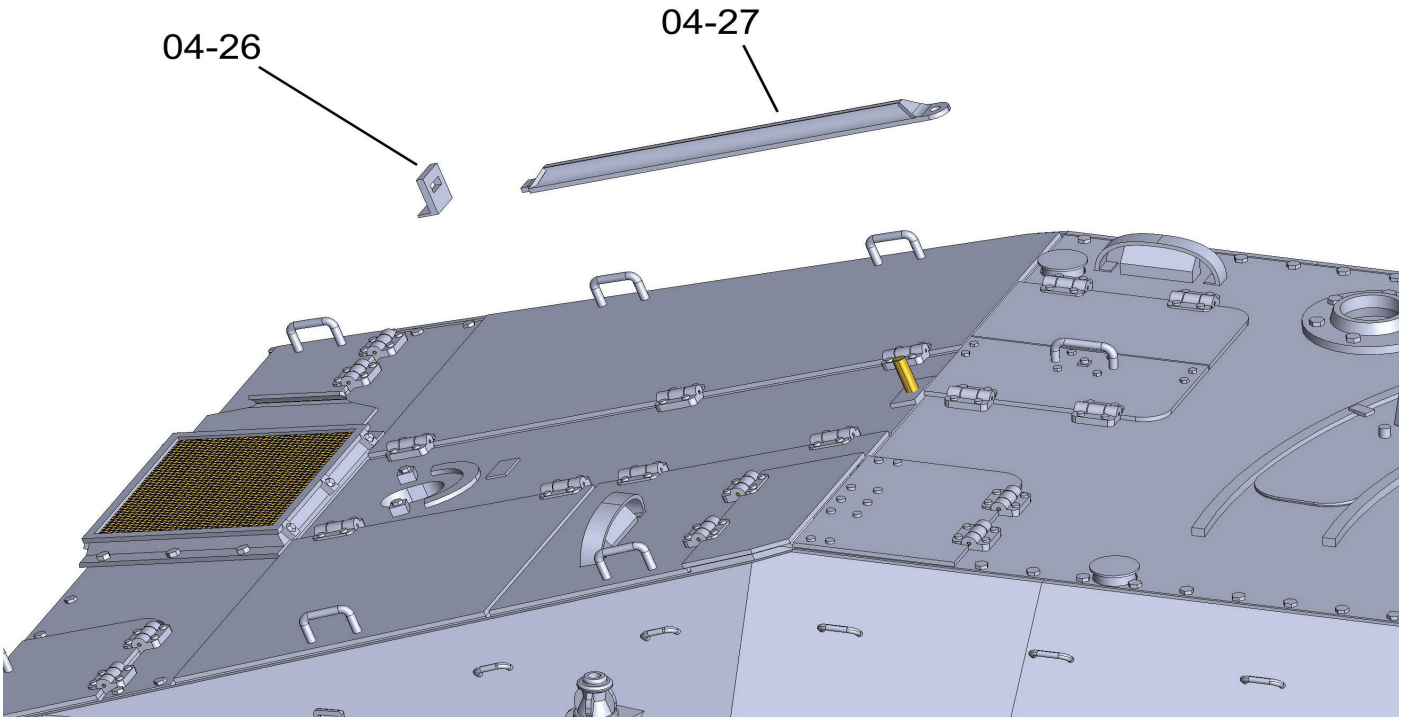

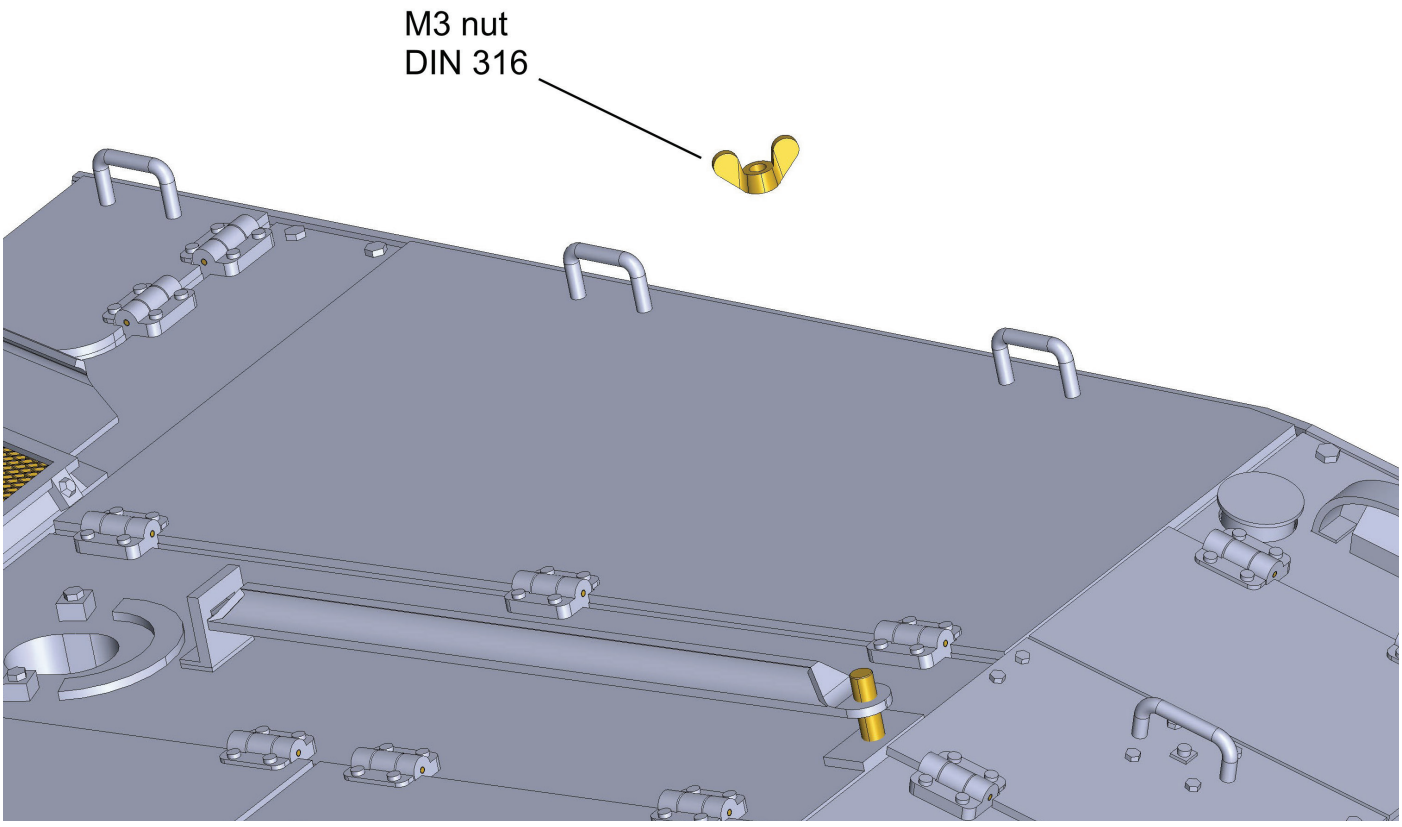

Glue part 04-26 from outside. Insert part 04-27 into part 04-26 and attach it to the screw M3x20.Secure screw with the M3 nut (DIN 316).Do not glue part 04-27.

Chapter 04 - Upper hull

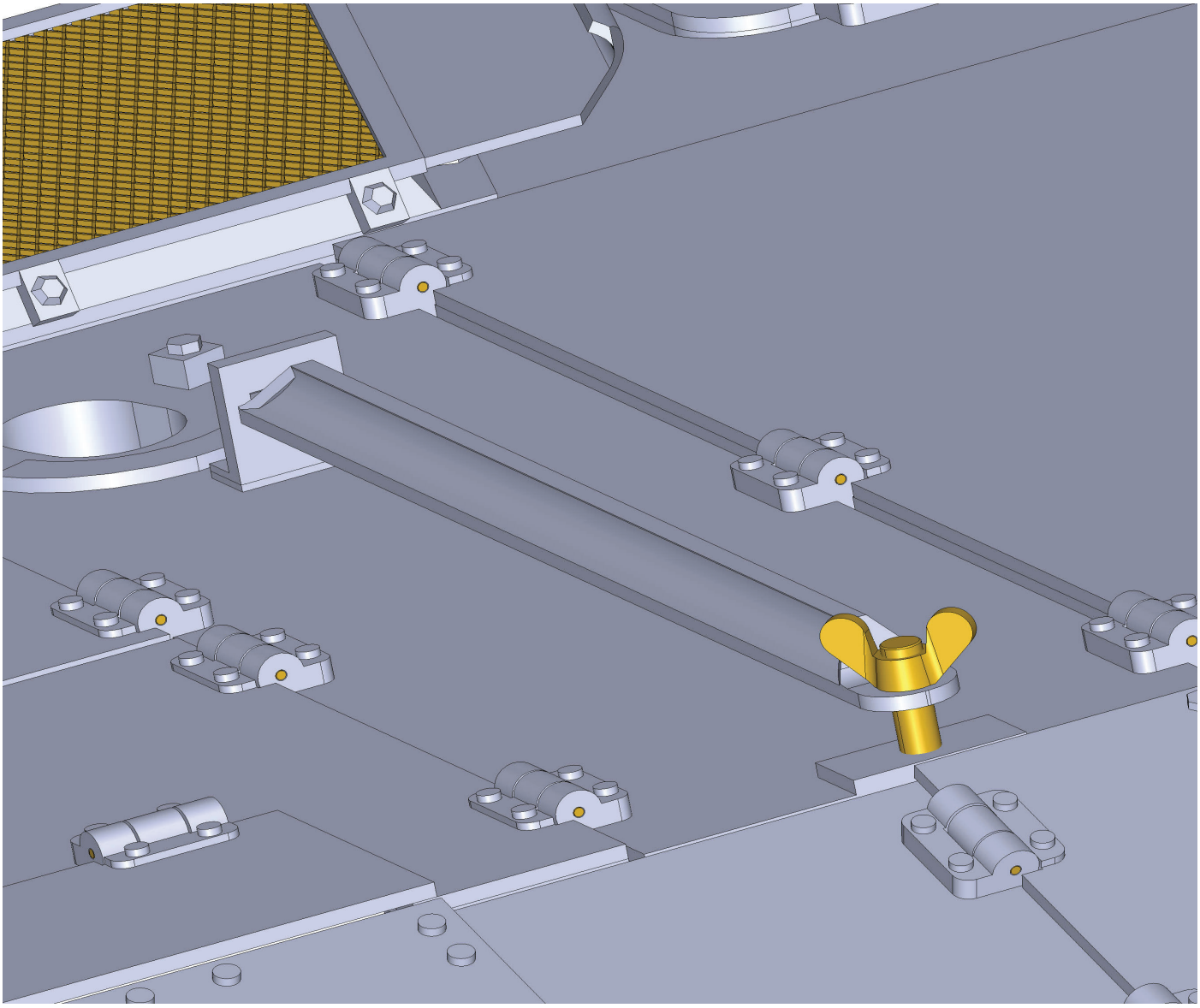

Correct position of all parts.

Chapter 04 - Upper hull

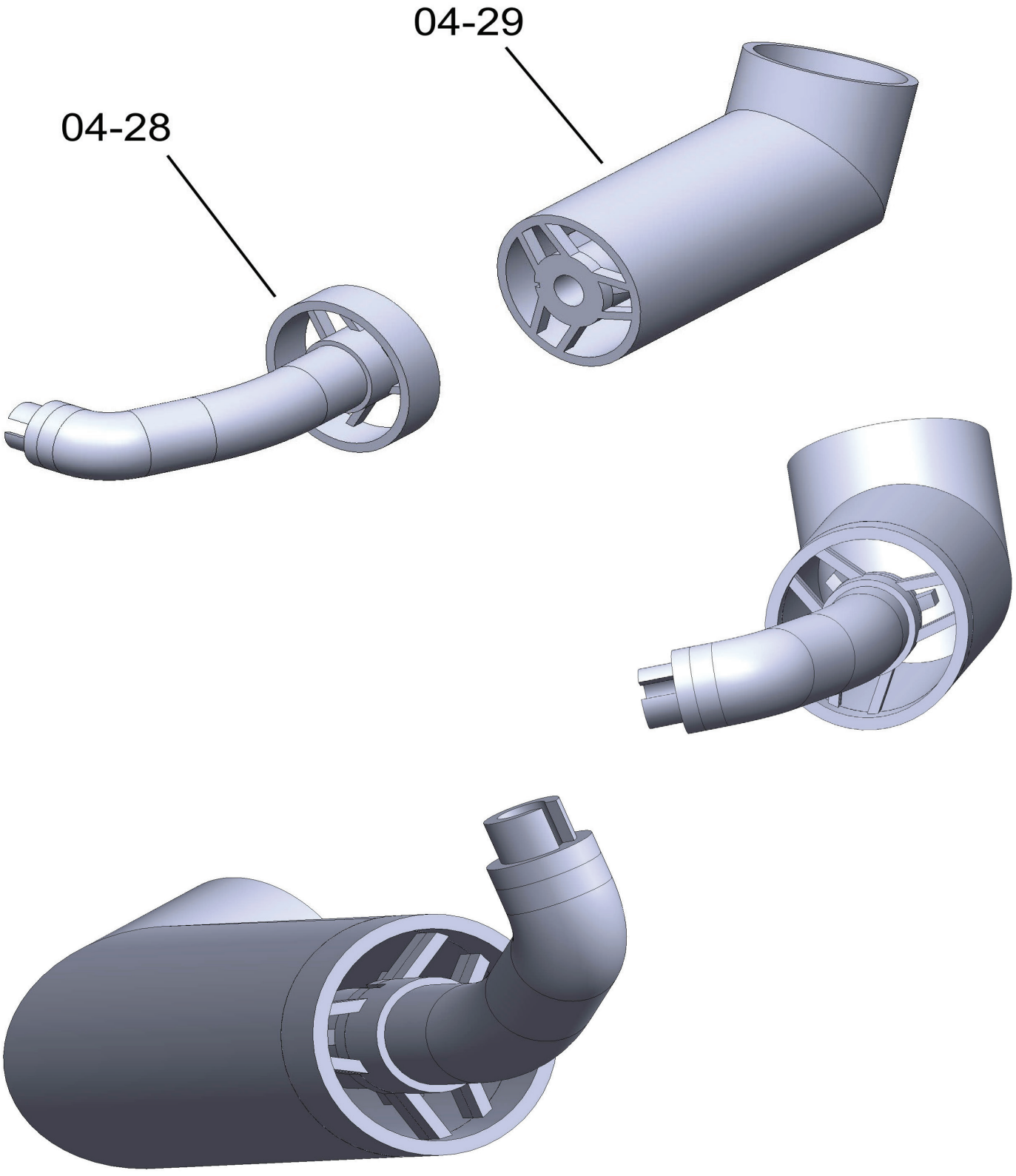

Connect parts 04-28 and 04-29. The correct orientation of the parts is shown in the figures below.

Chapter 04 - Upper hull

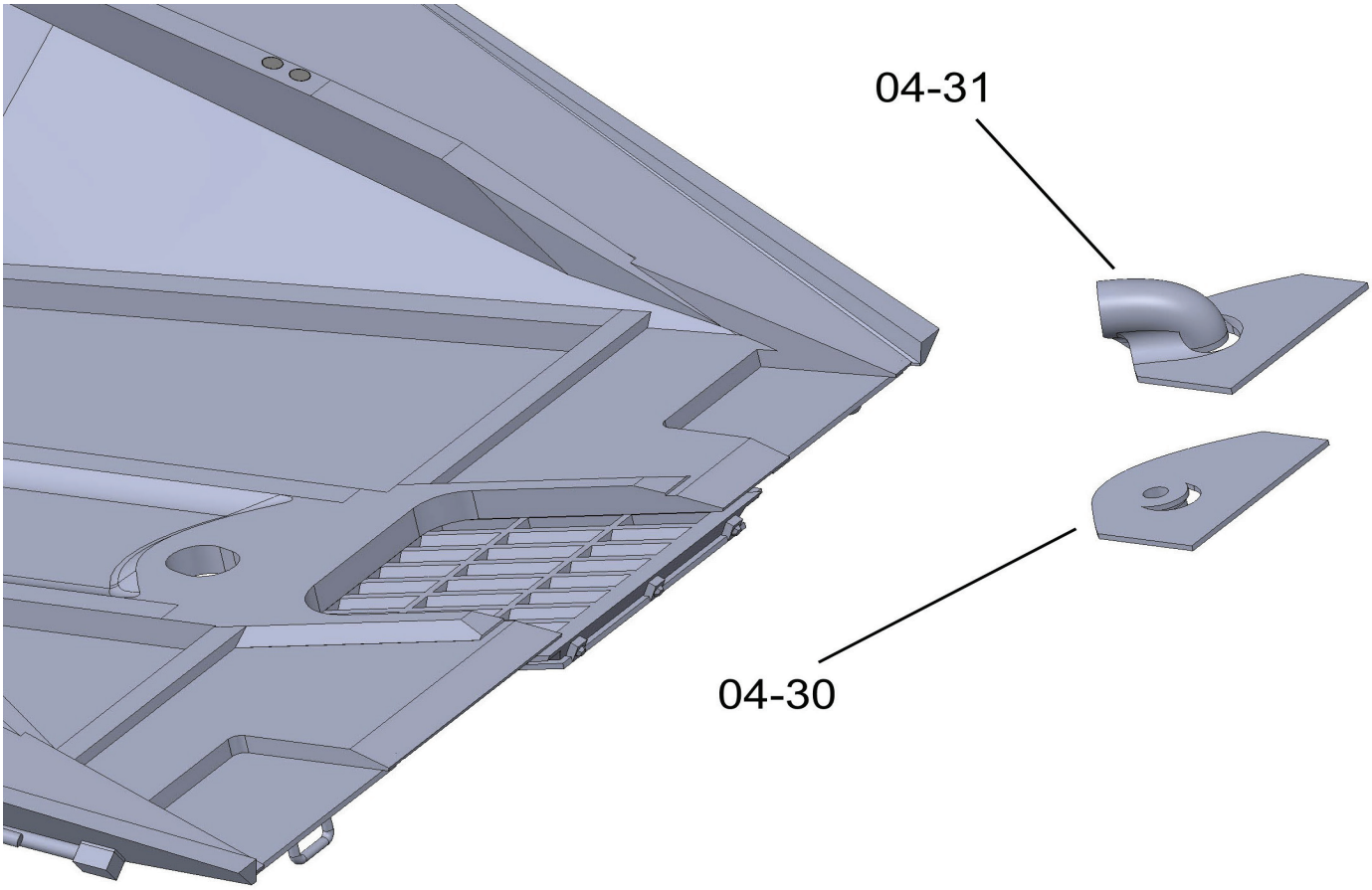

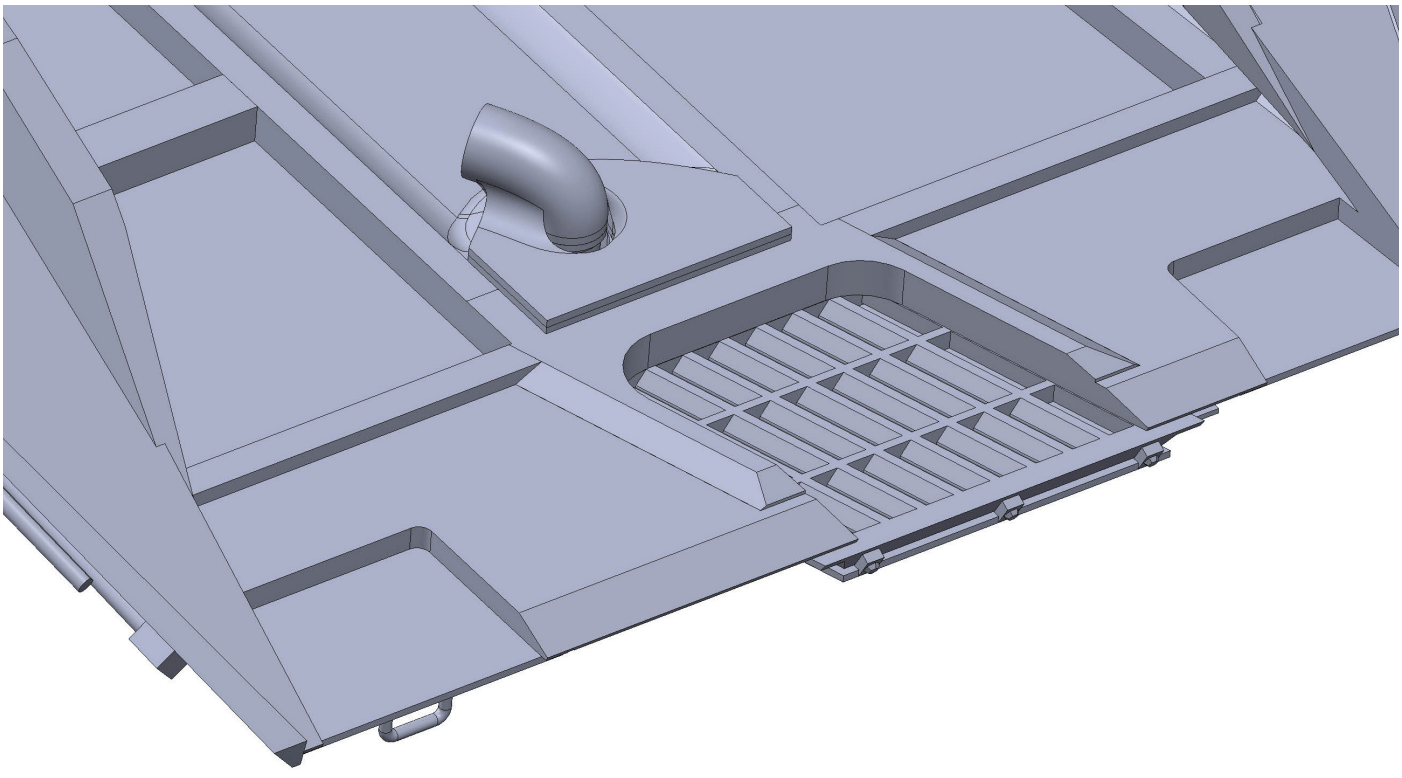

Glue parts 04-30 and 04-31 on the inside of part 04-02.

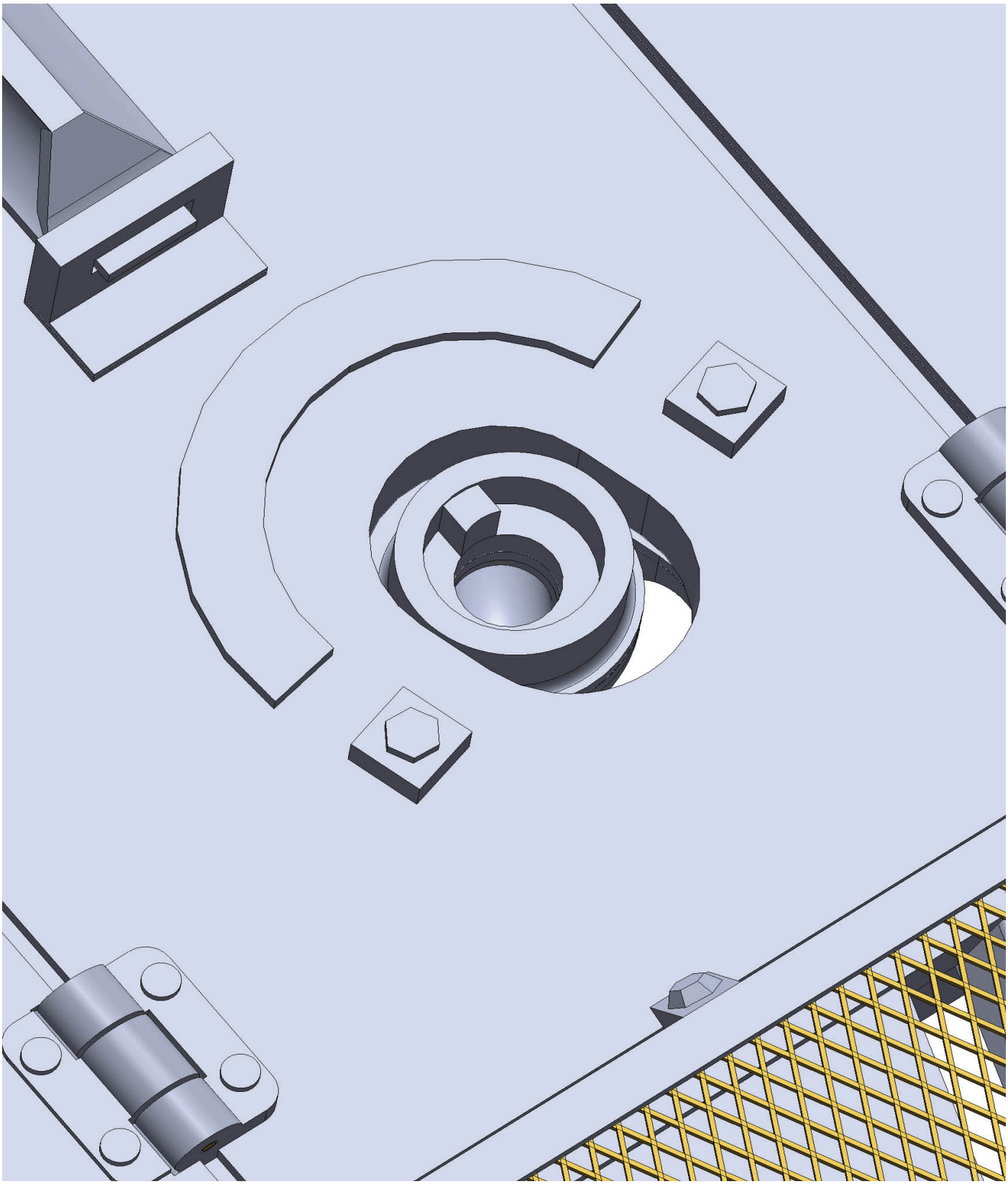

Correct position of parts 04-30 and 04-31.

Chapter 04 - Upper hull

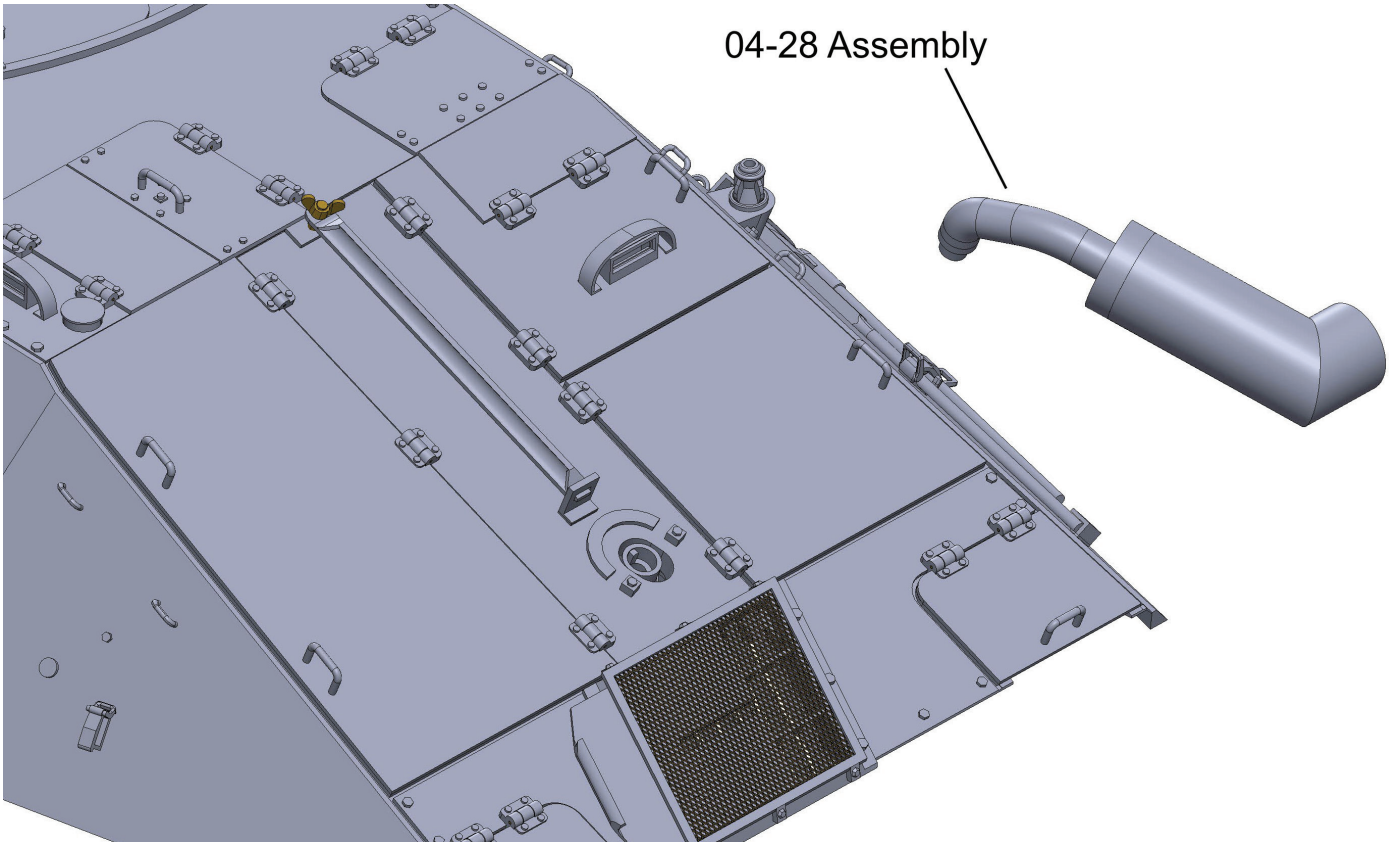

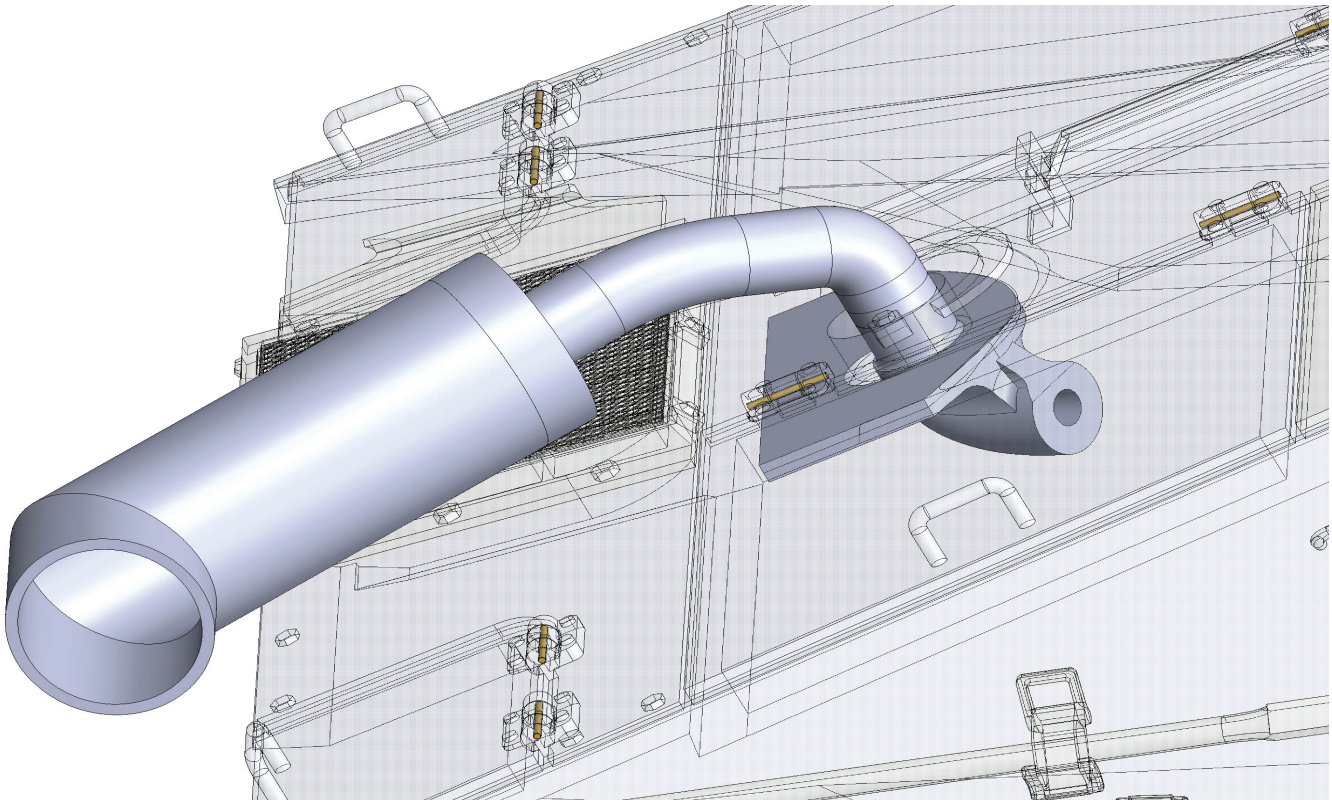

Glue part subassembly 04-28.

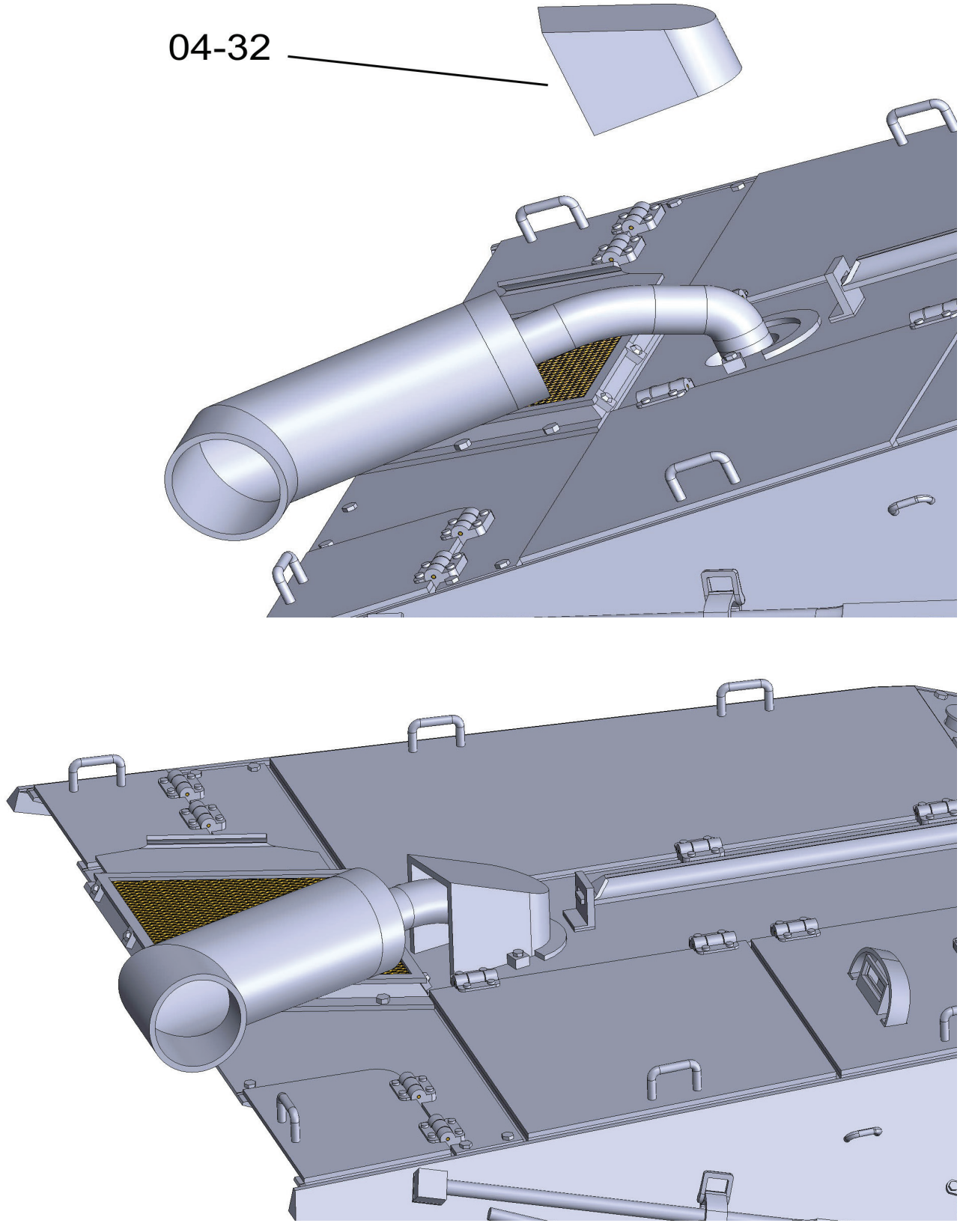

Glue part 04-32.

Chapter 04 - Upper hull

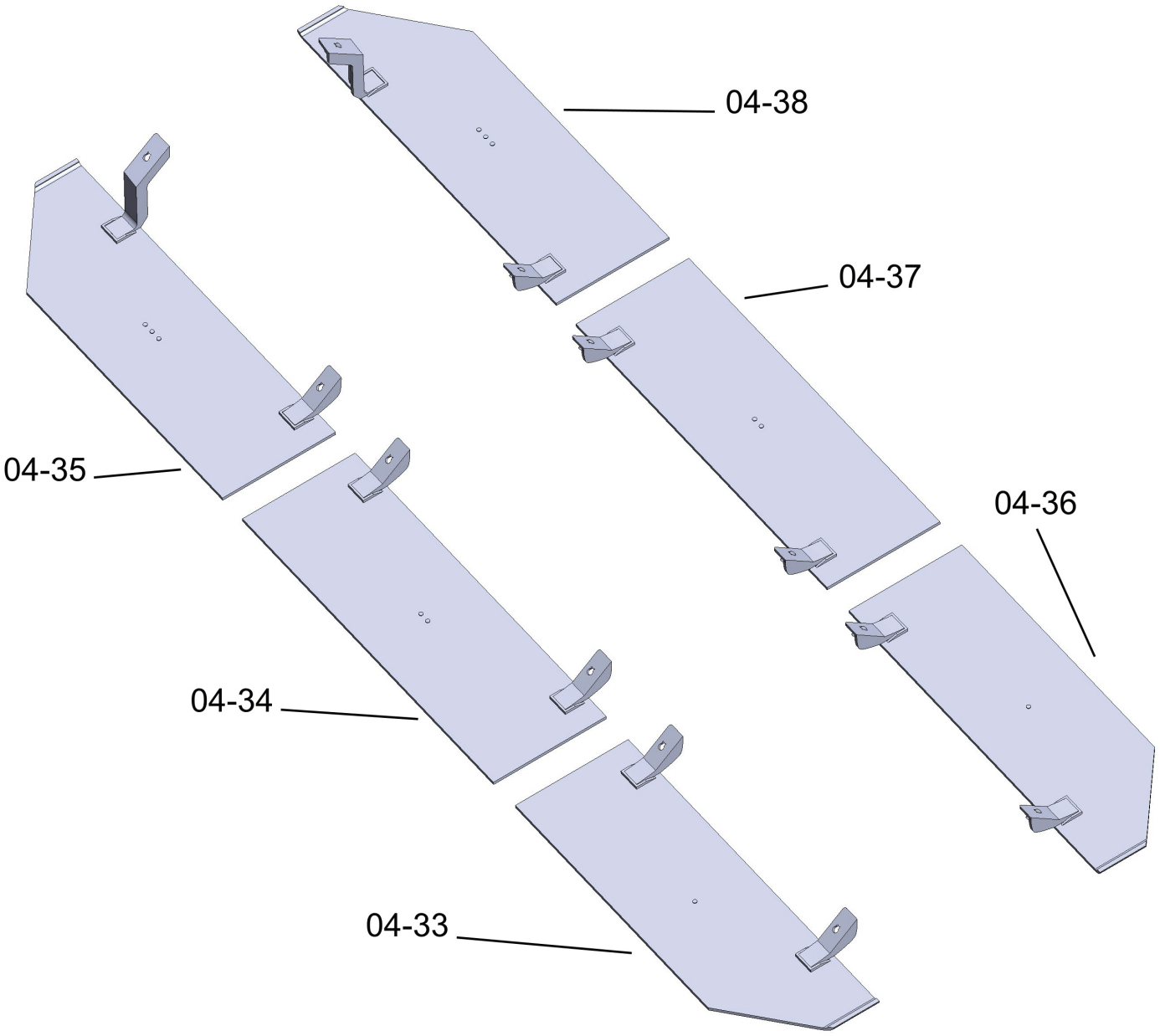

Prepare “Schurzen”.
Prepare parts exactly as shown.
Individual parts 04-33 to 04-38 are marked with dots on the inside.
These serve as markings against confusion.
You can replace your markings with your own and cut off the dots.
Parts with one dot belong to the front of the vehicle, parts with three dots to the rear.

Chapter 04 - Upper hull

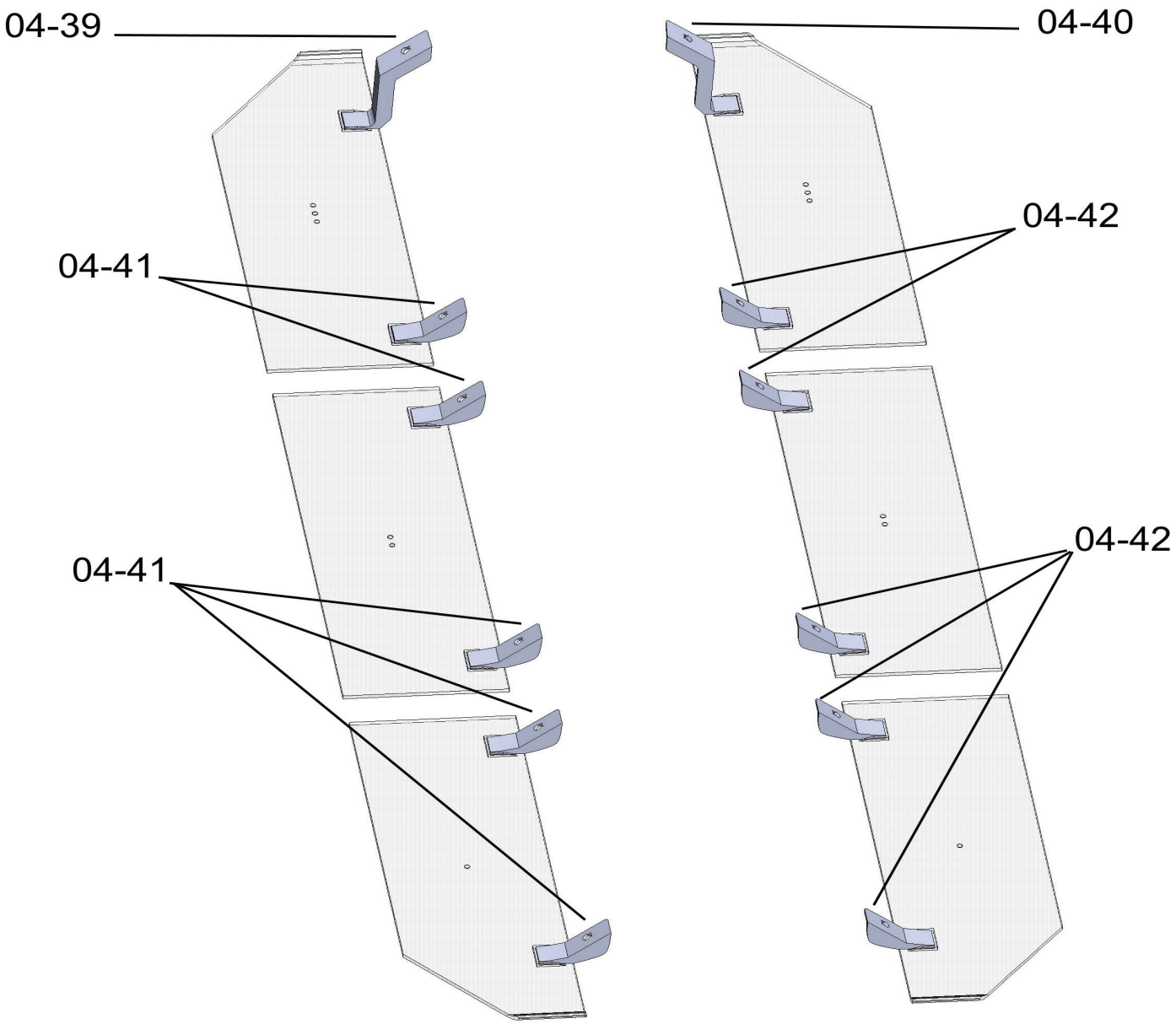

Make sure that the parts 04-39 to 04-42 are correctly oriented.

Chapter 04 - Upper hull

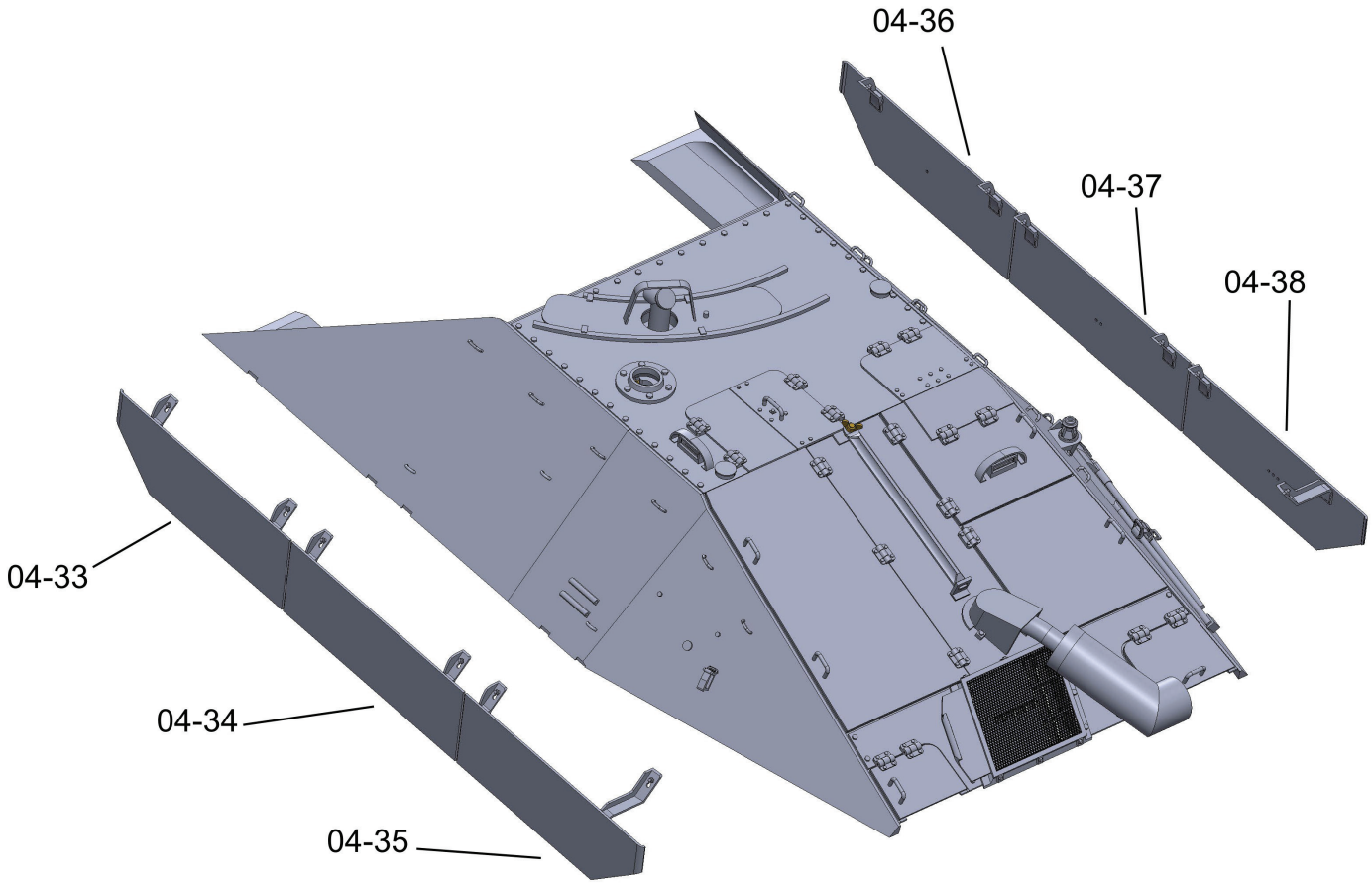

Glue the parts as shown. Align carefully.

Chapter 04 - Upper hull

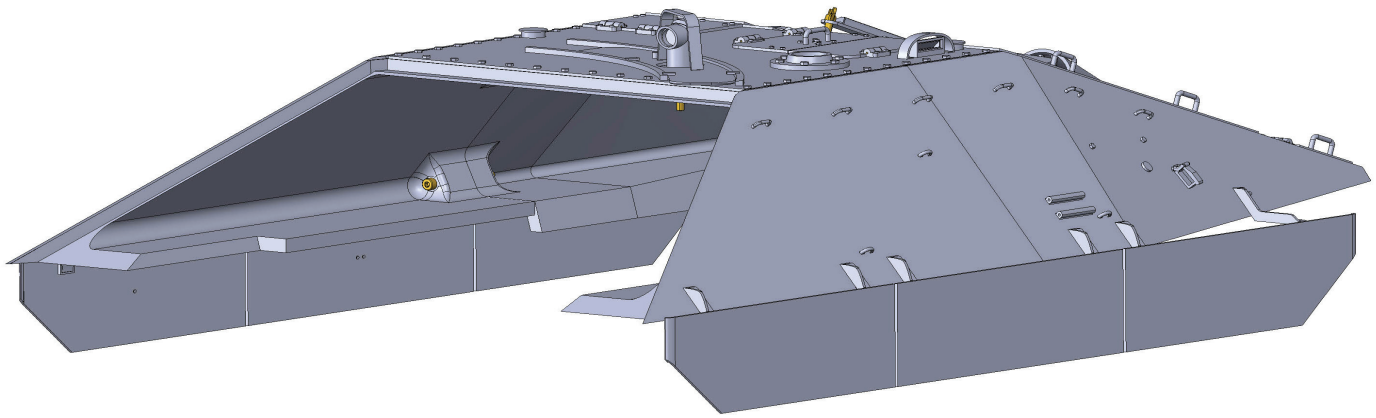

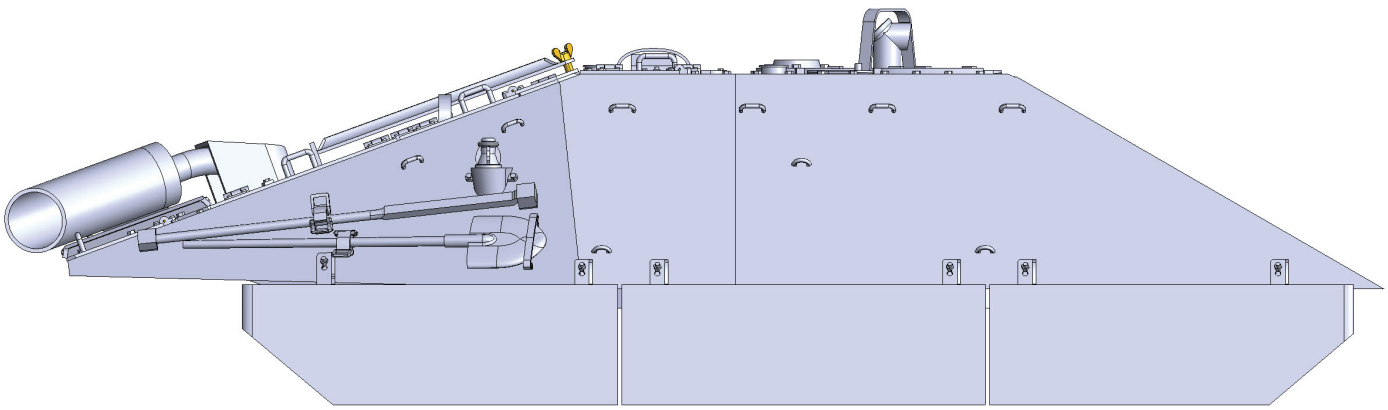

Additional views for bonding parts 04-33 to 04-42.

Chapter 04 - Upper hull

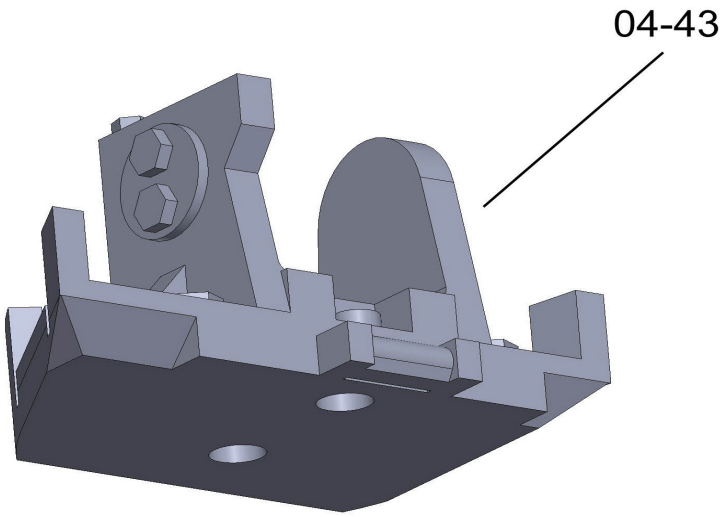

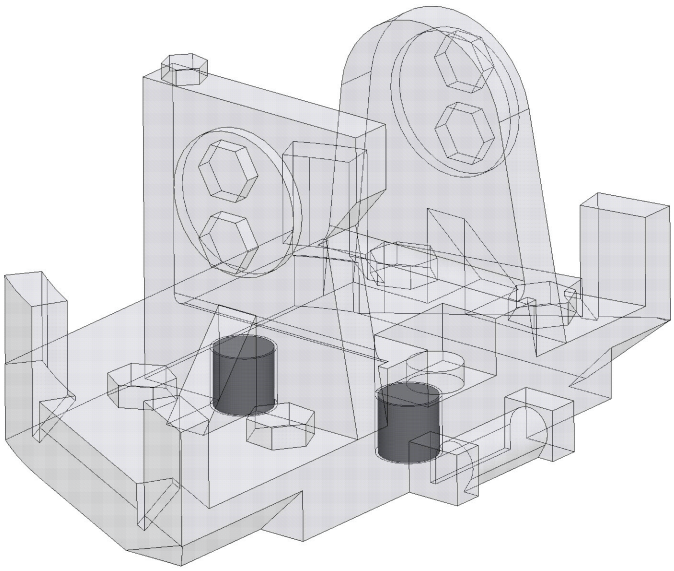

Glue two magnets of 3mm diameter and 3mm length
into the holes in part 04-43.

Chapter 04 - Upper hull

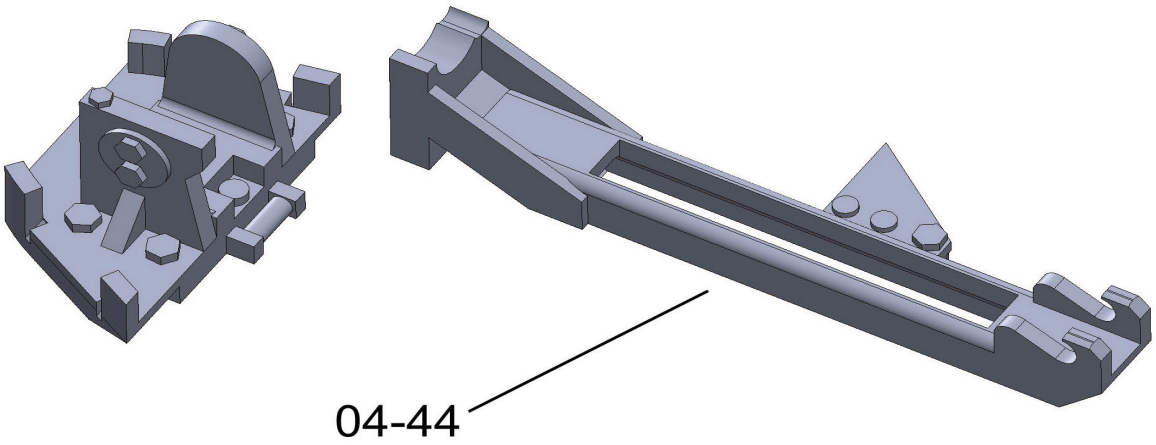

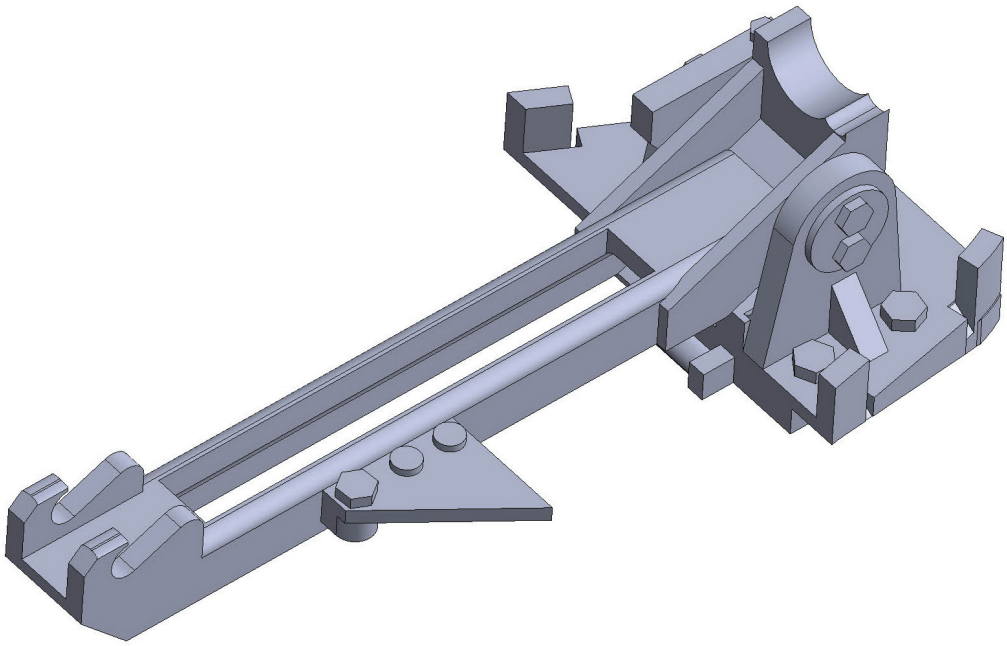

Glue part 04-44.

Chapter 04 - Upper hull

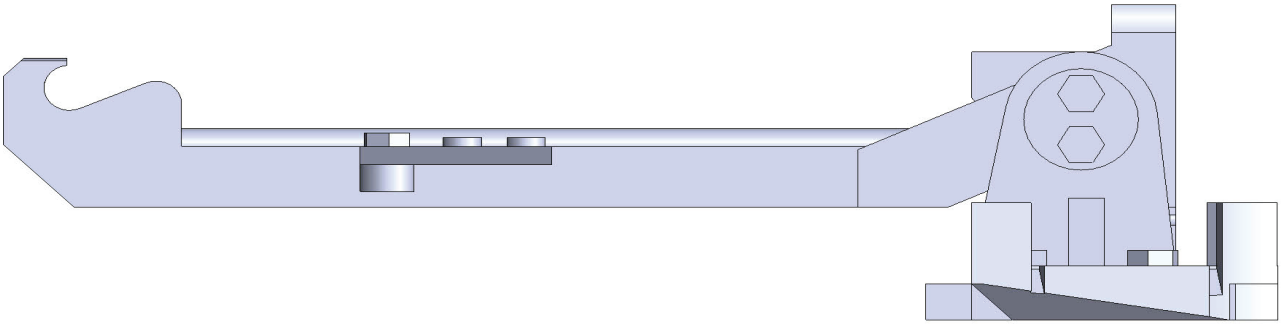

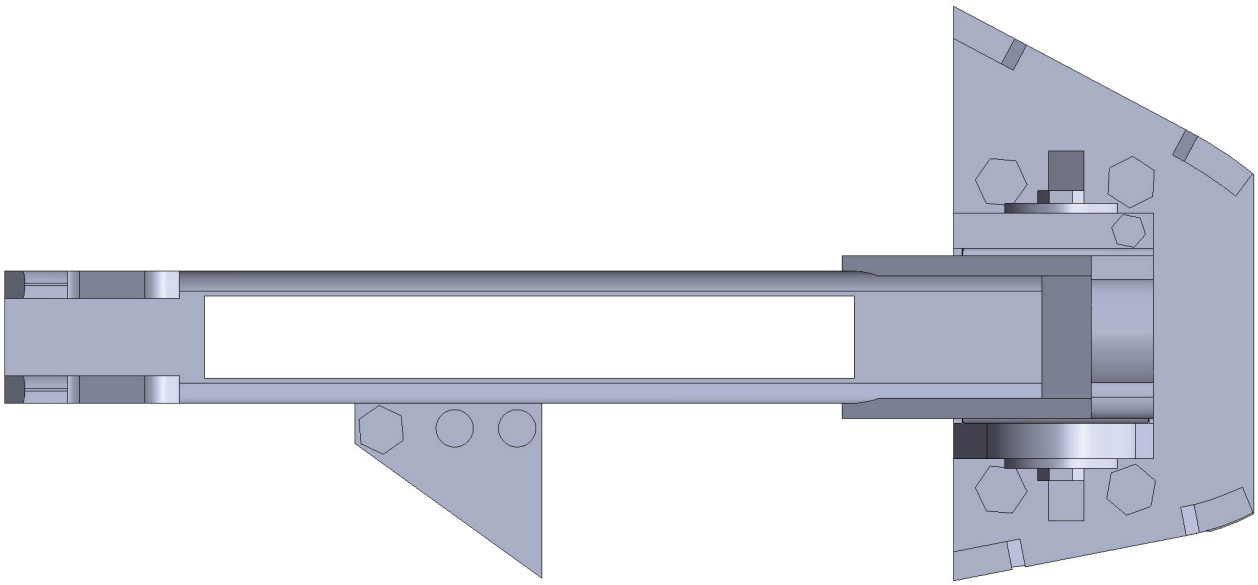

Additional views for bonding parts 04-43 to 04-44.

Chapter 04 - Upper hull

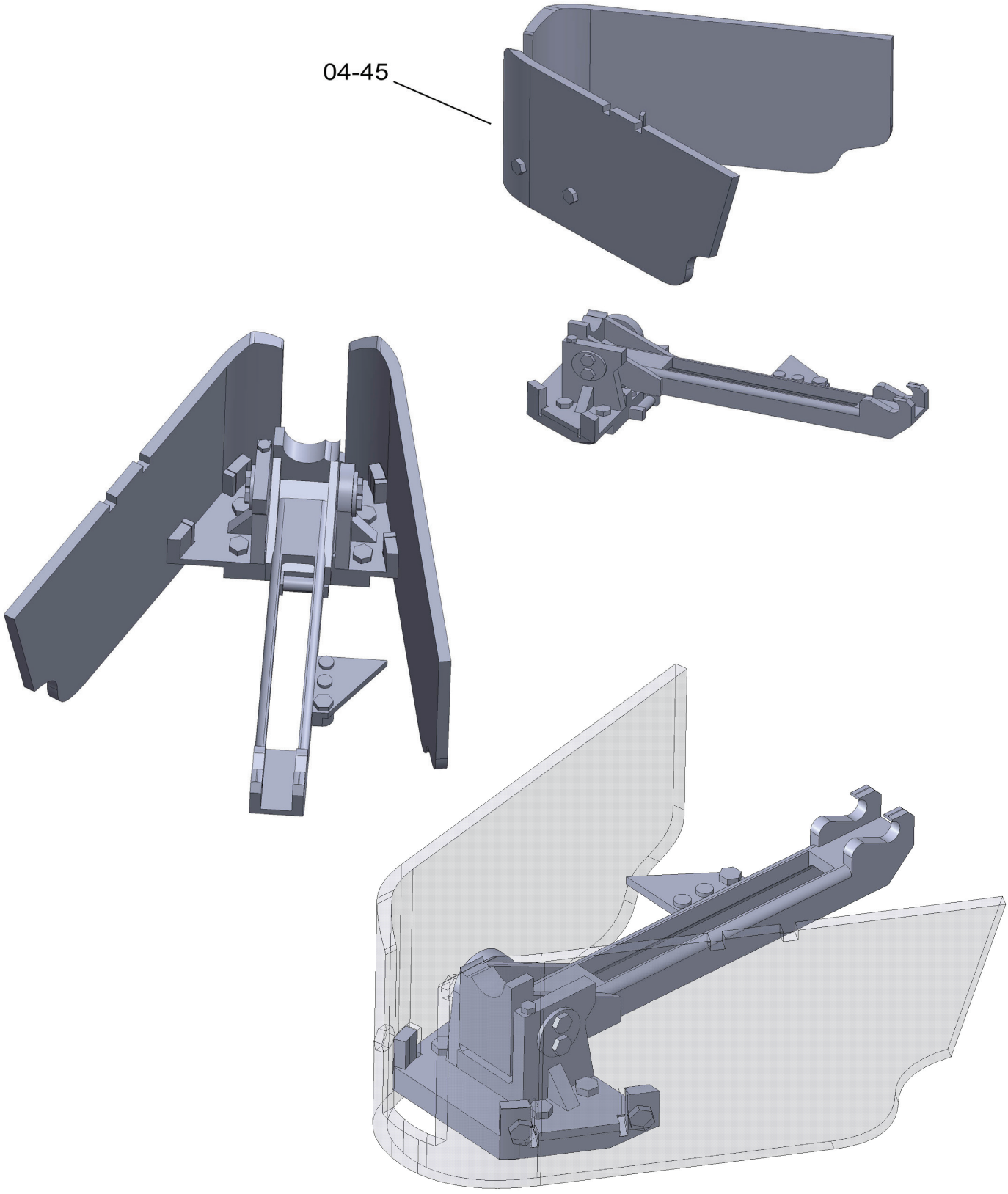

Glue part 04-45.

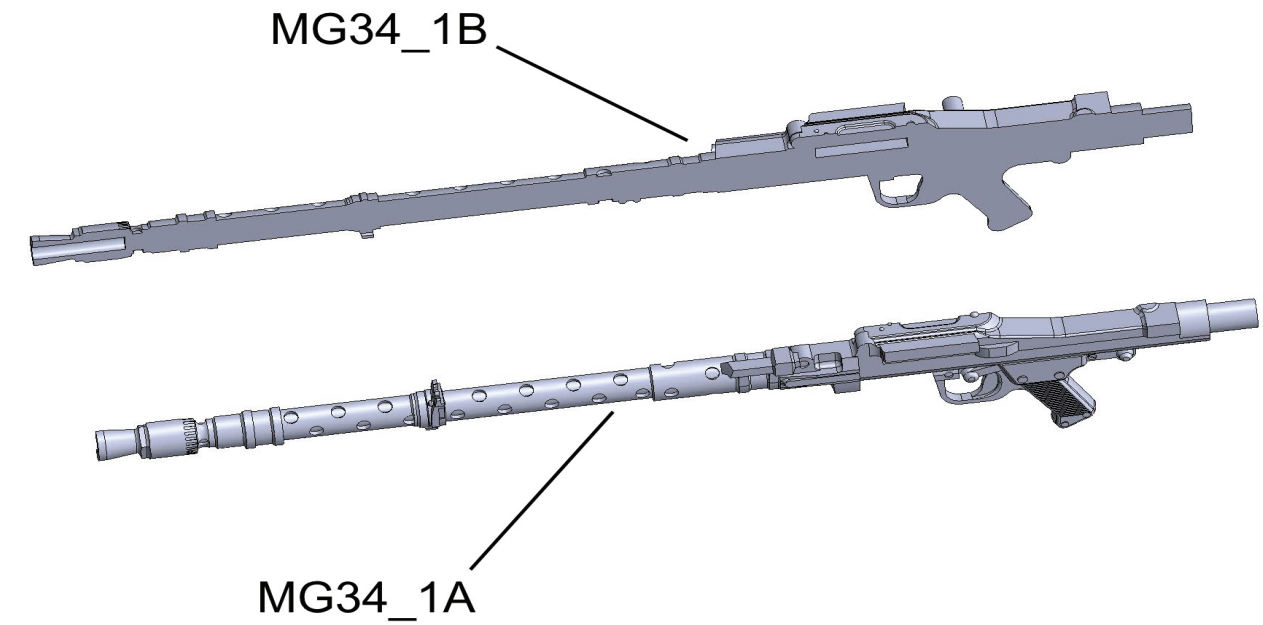



Glue part MG34_1A to MG34_1B.

Chapter 04 - Upper hull

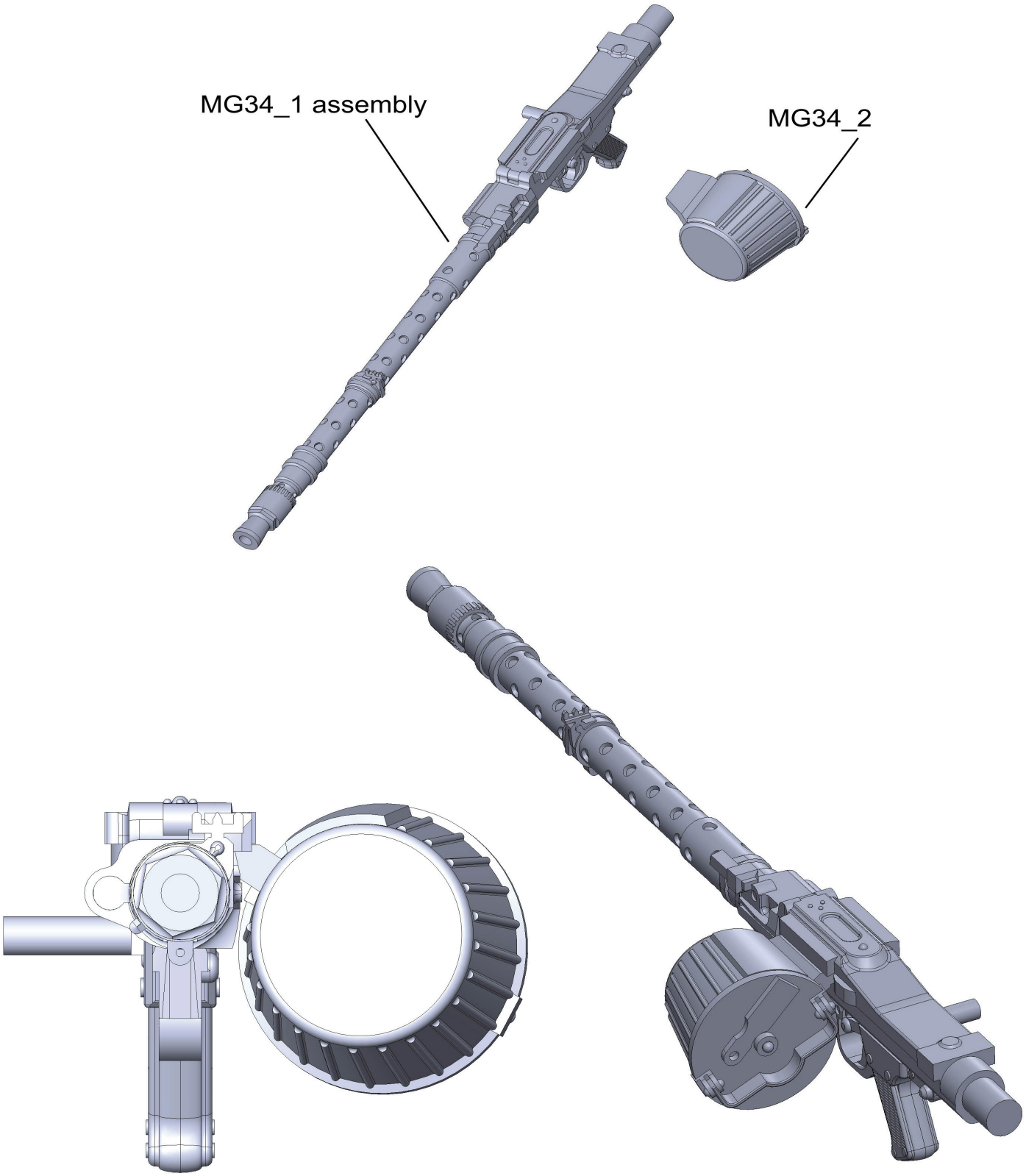

Glue Assembly MG34_1 to MG34_2.

Chapter 04 - Upper hull

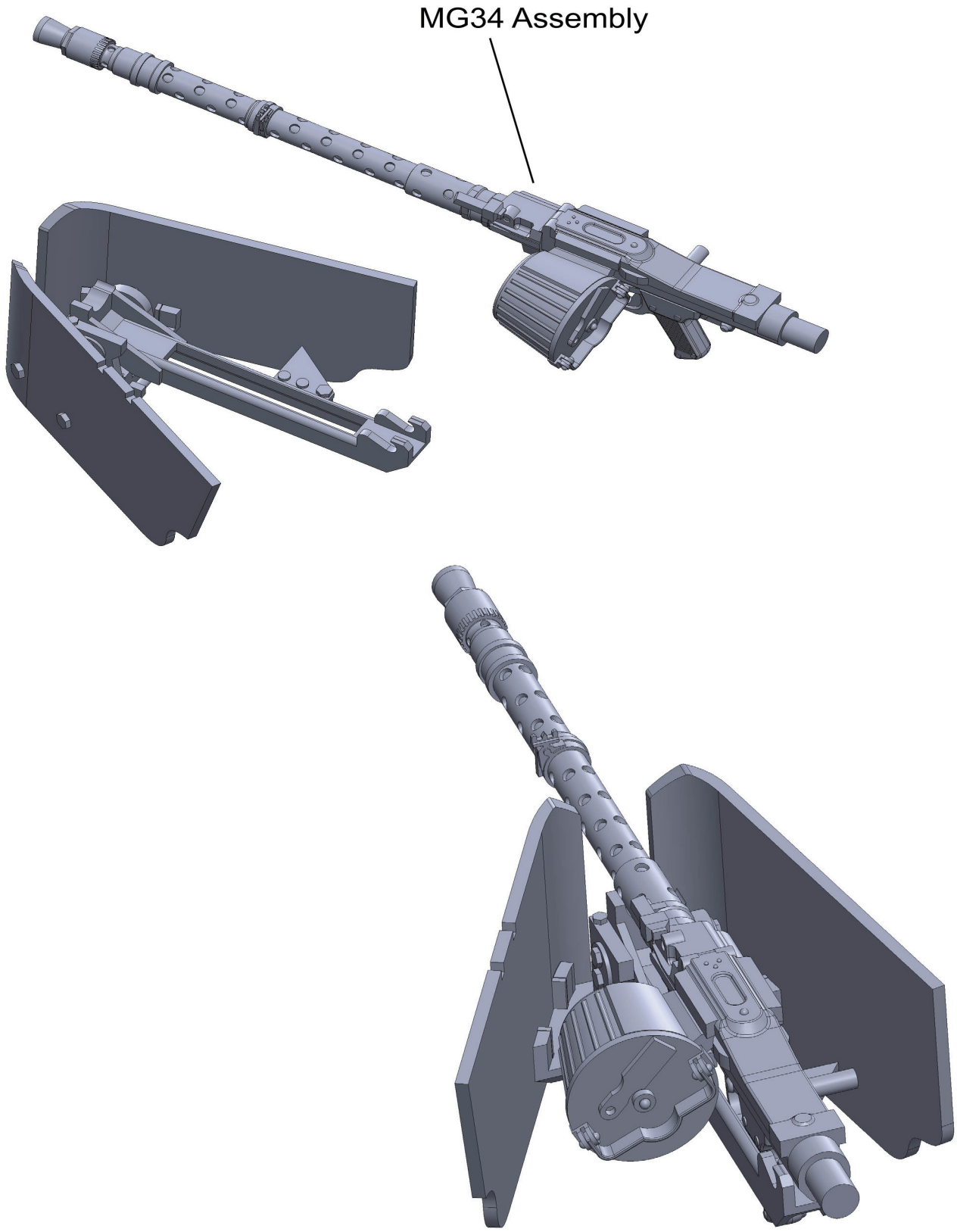

Glue MG34 Assembly to part 04-44.

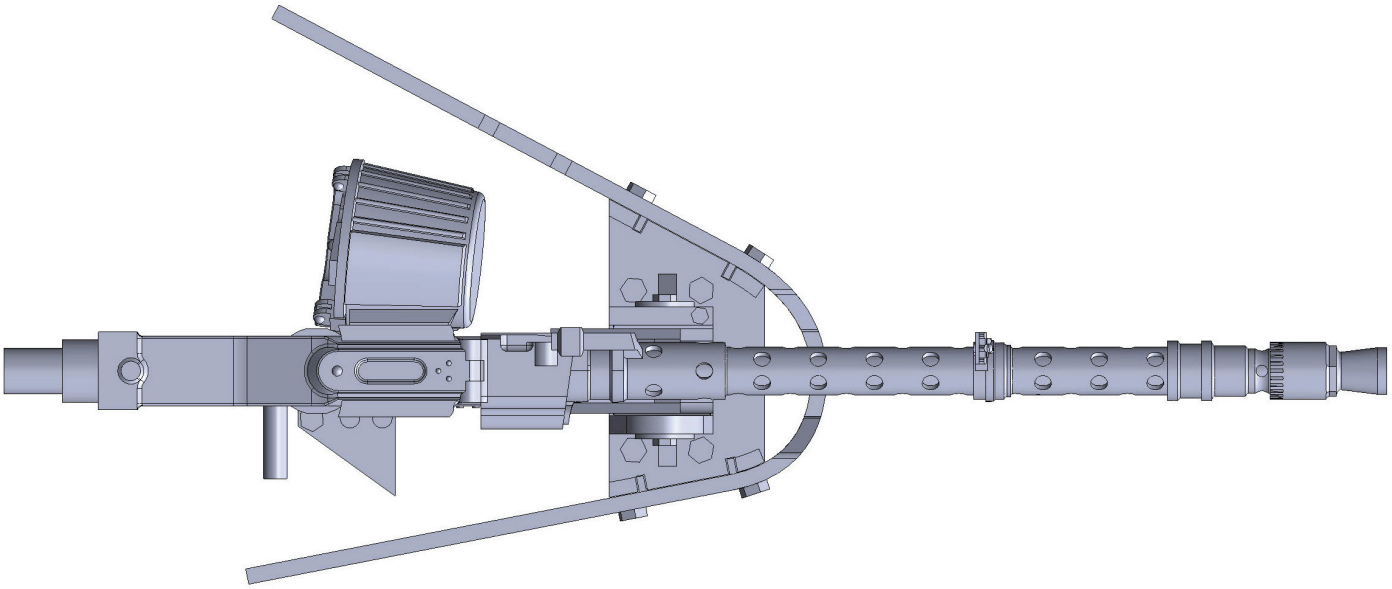

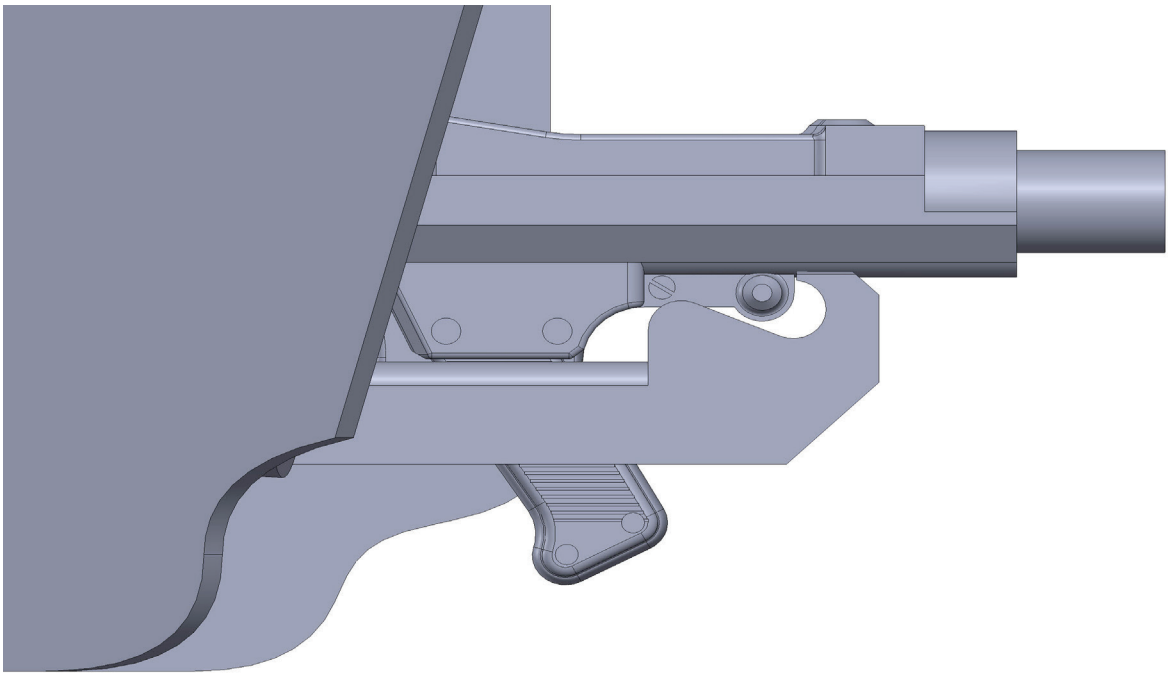

Additional views for bonding.

Chapter 04 - Upper hull

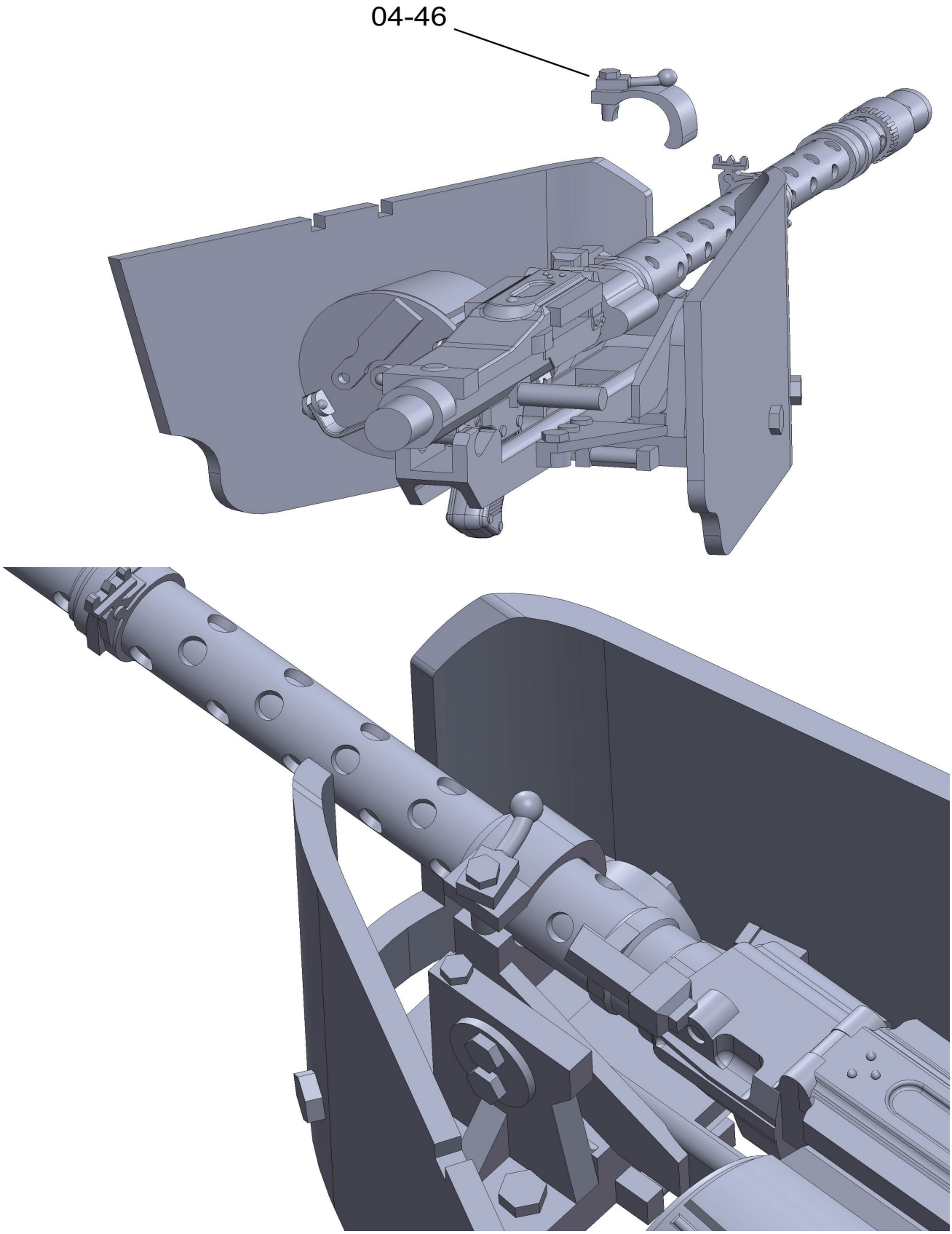

Glue part 04-46.

Chapter 04 - Upper hull

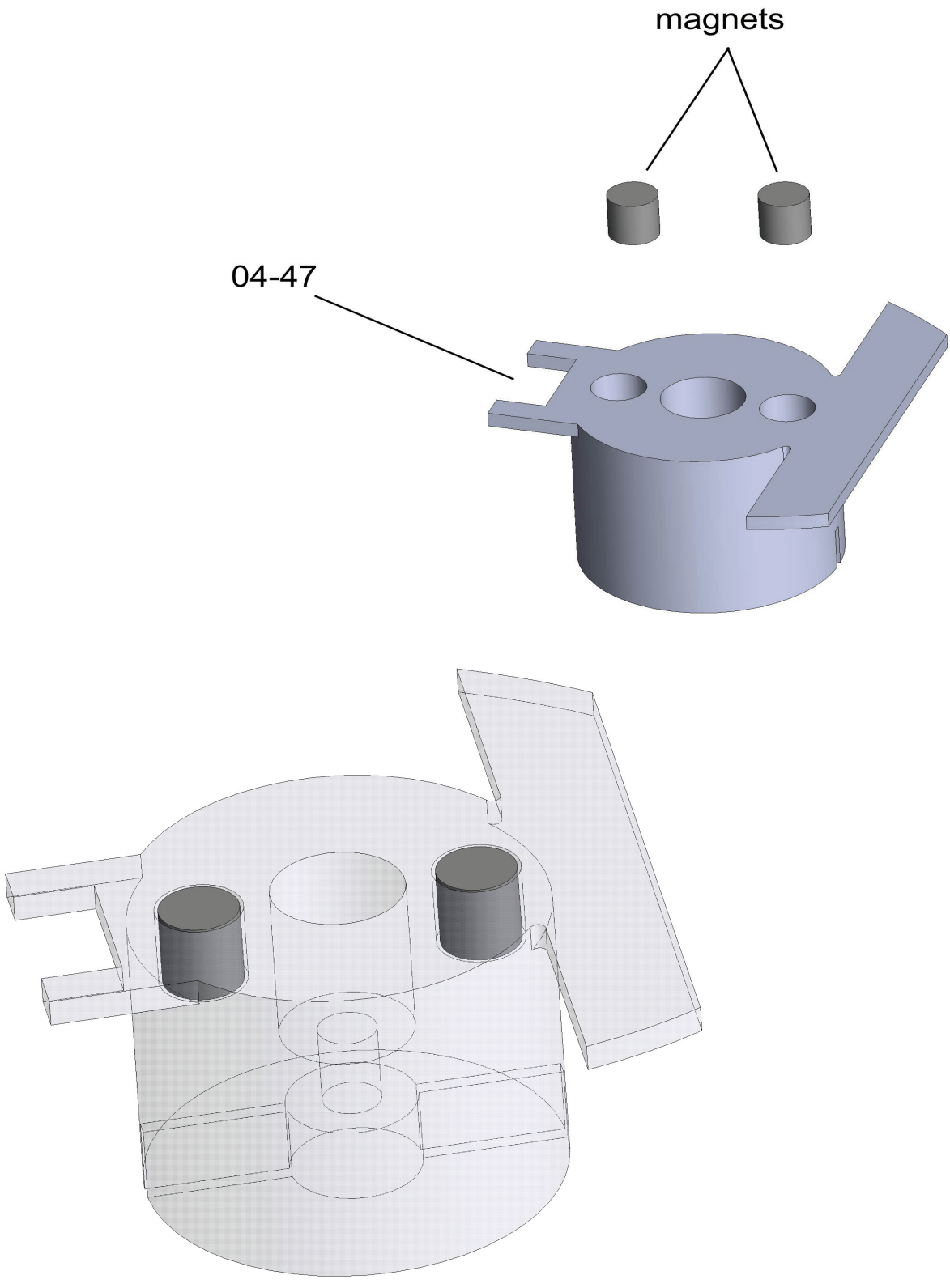

Glue two magnets of 3mm diameter and 3mm length into the holes in part 04-47.

Chapter 04 - Upper hull

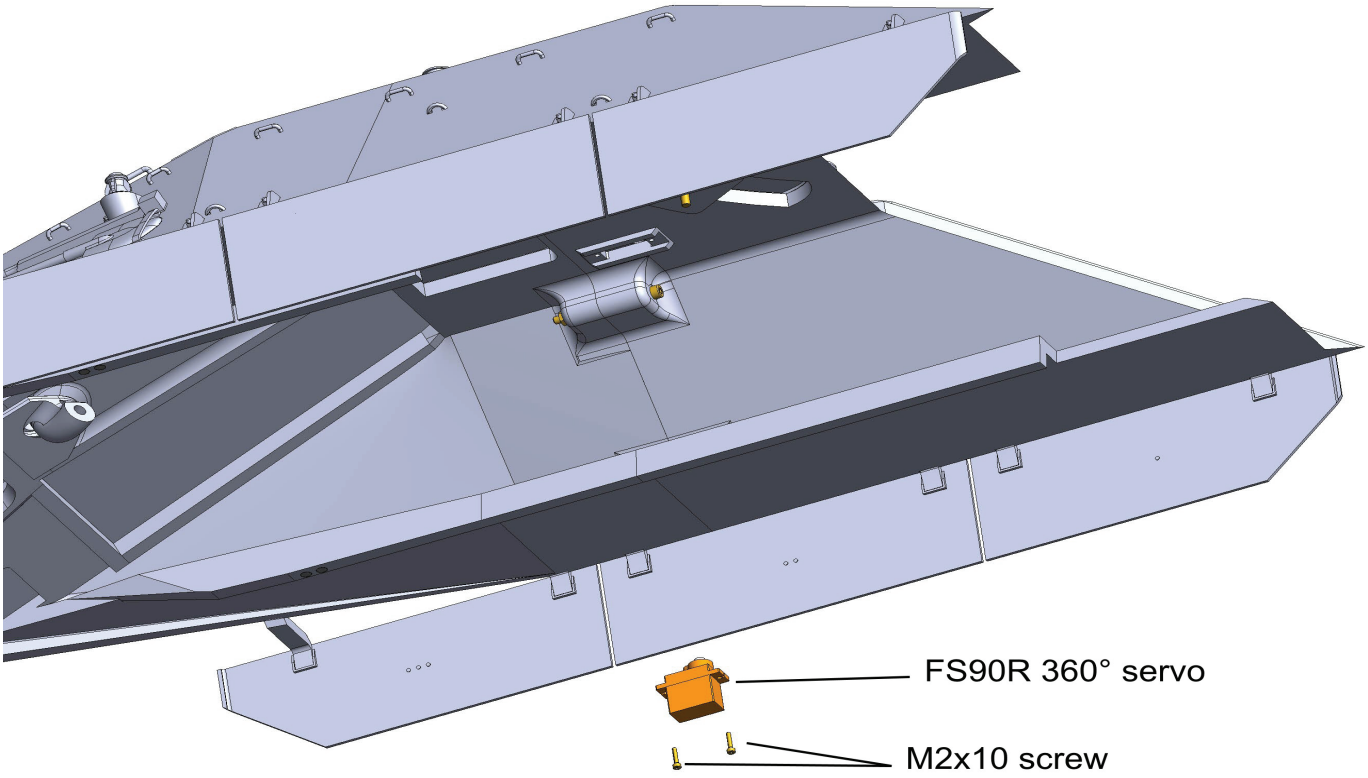

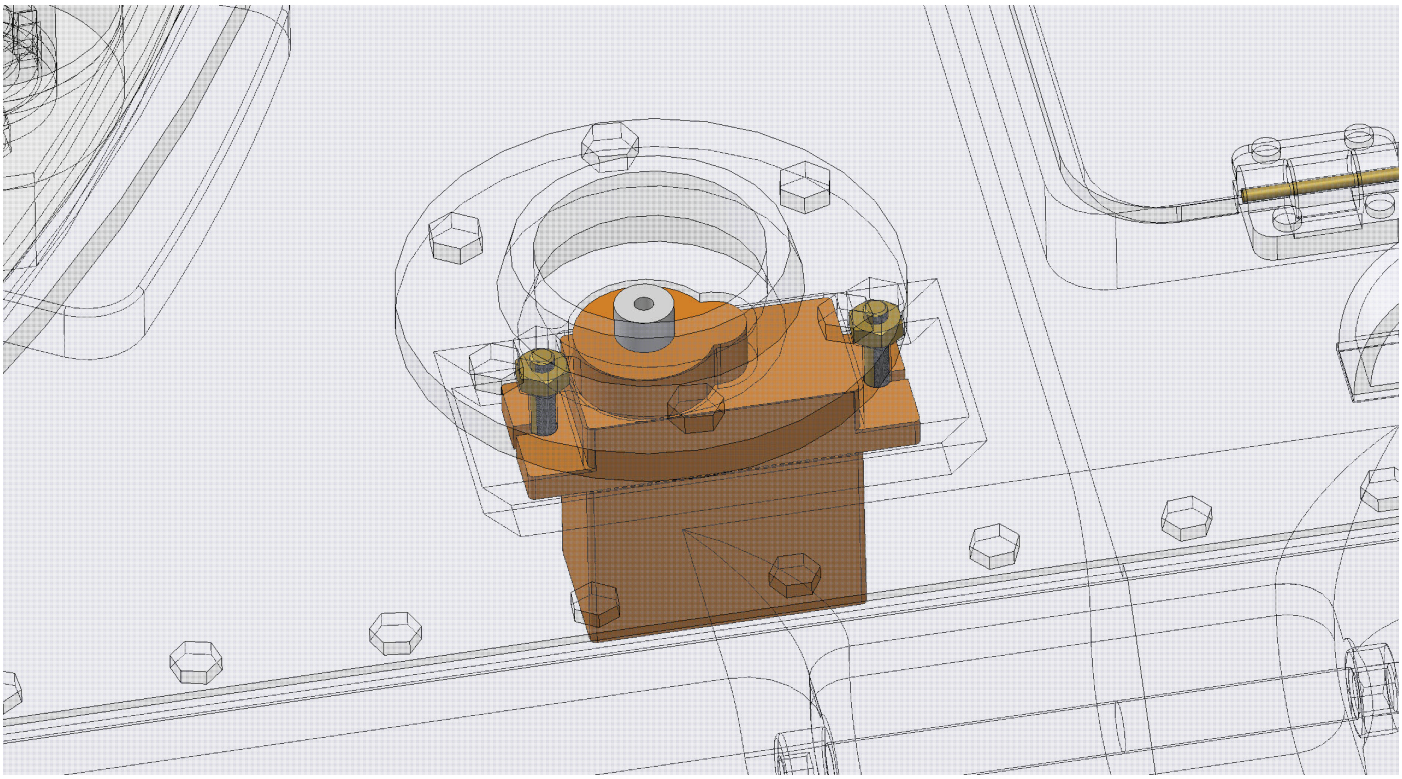

Attach 360 ° servo from inside of part 04-01. Use two M2x10 screws.

If you are not interested in a functional machine gun, go to page 155 !!!

Chapter 04 - Upper hull

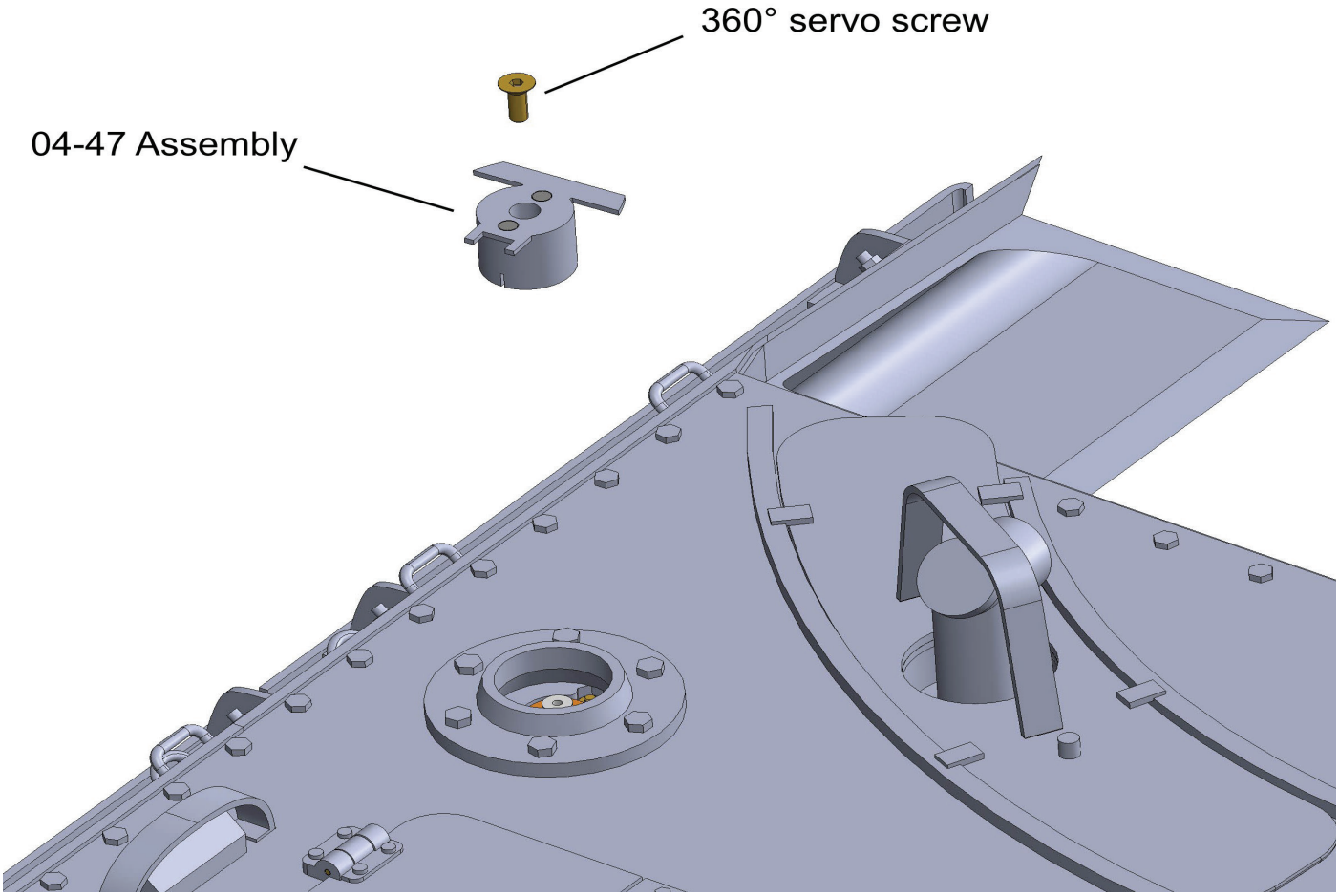

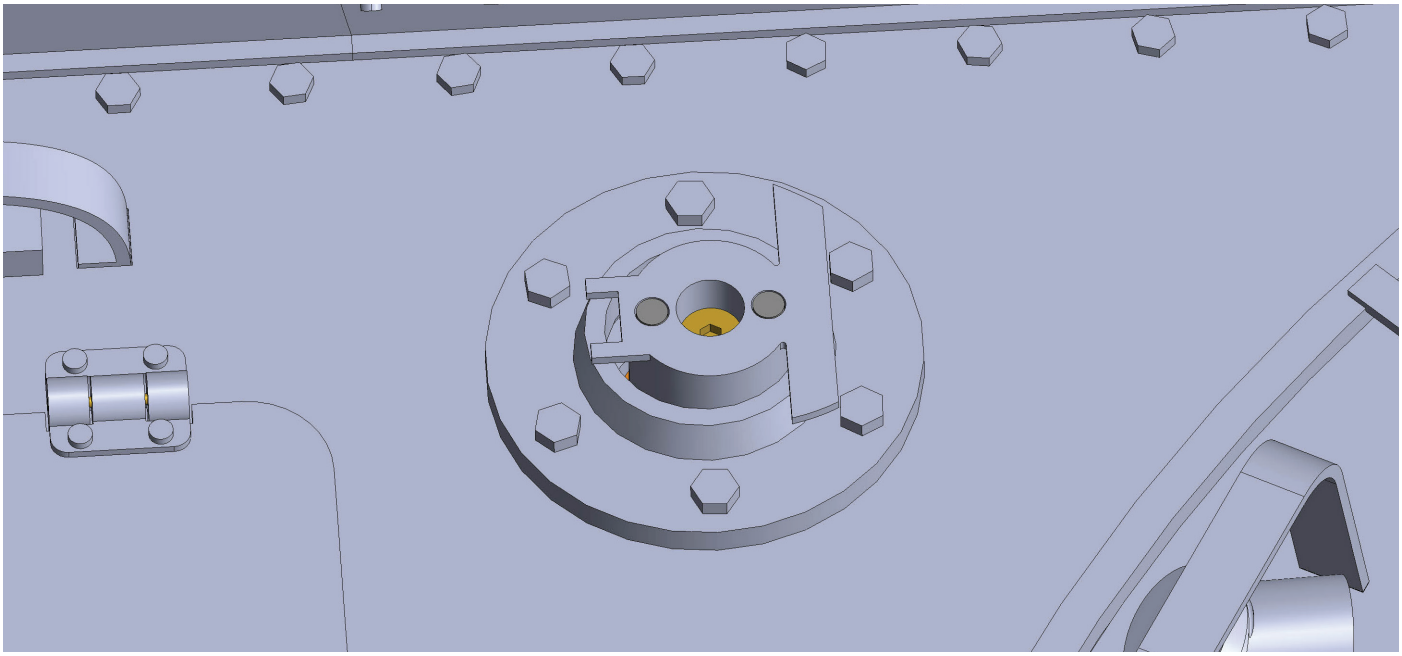

Slide the subassembly 04-47 onto the servo.Secure with the original servo screw.
Do not glue parts to the servo.

Chapter 04 - Upper hull

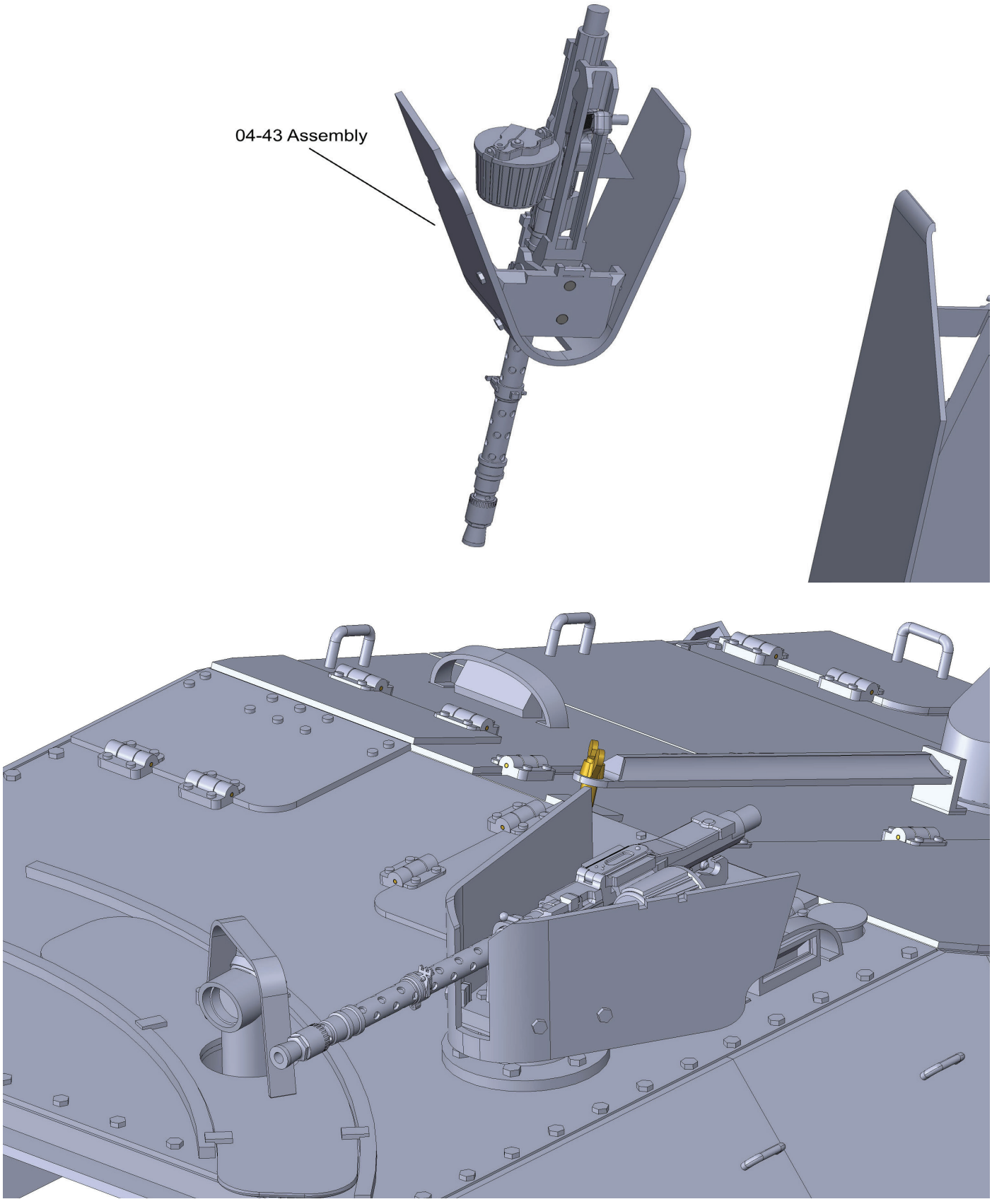

Attach the 04-43 subassembly to part 04-47 with the magnets.

Chapter 04 - Upper hull

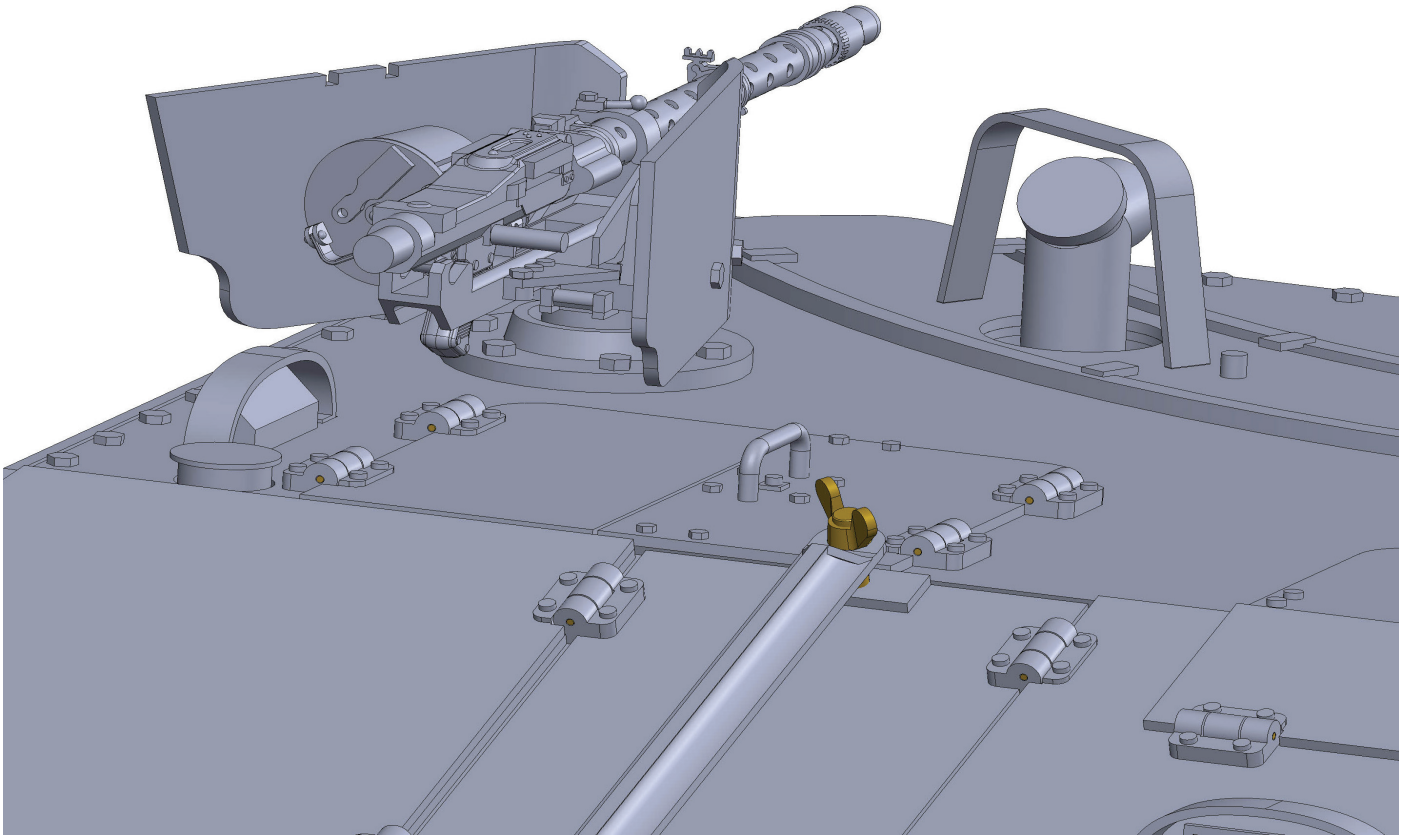

Additional view for better orientation.

Chapter 04 - Upper hull - Alternative parts

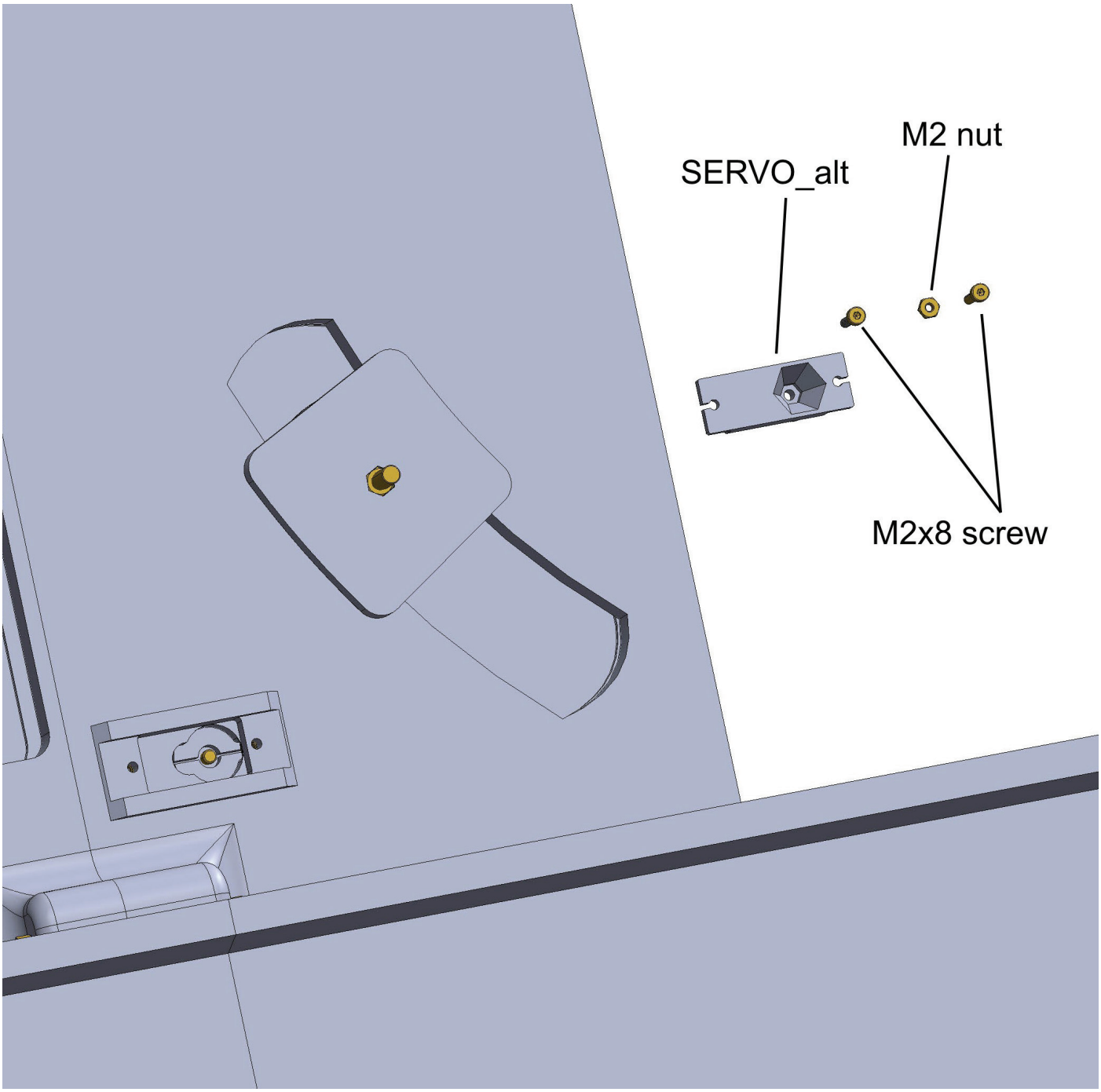

When installing a machine gun without a servomotor,
the construction process does not differ.
Use the printed part SERVO_alt instead of the servo.
Insert M2 nut and secure with two M2x8 screws.

Chapter 04 - Upper hull - Alternative parts

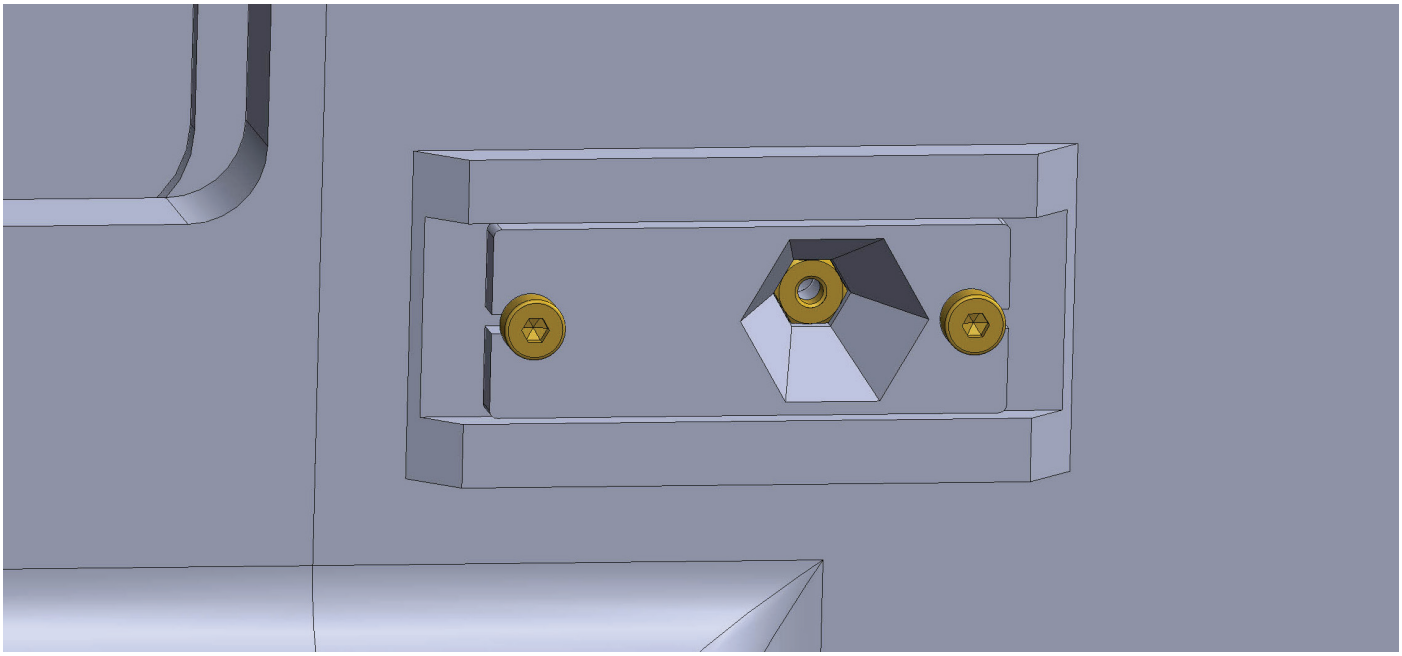

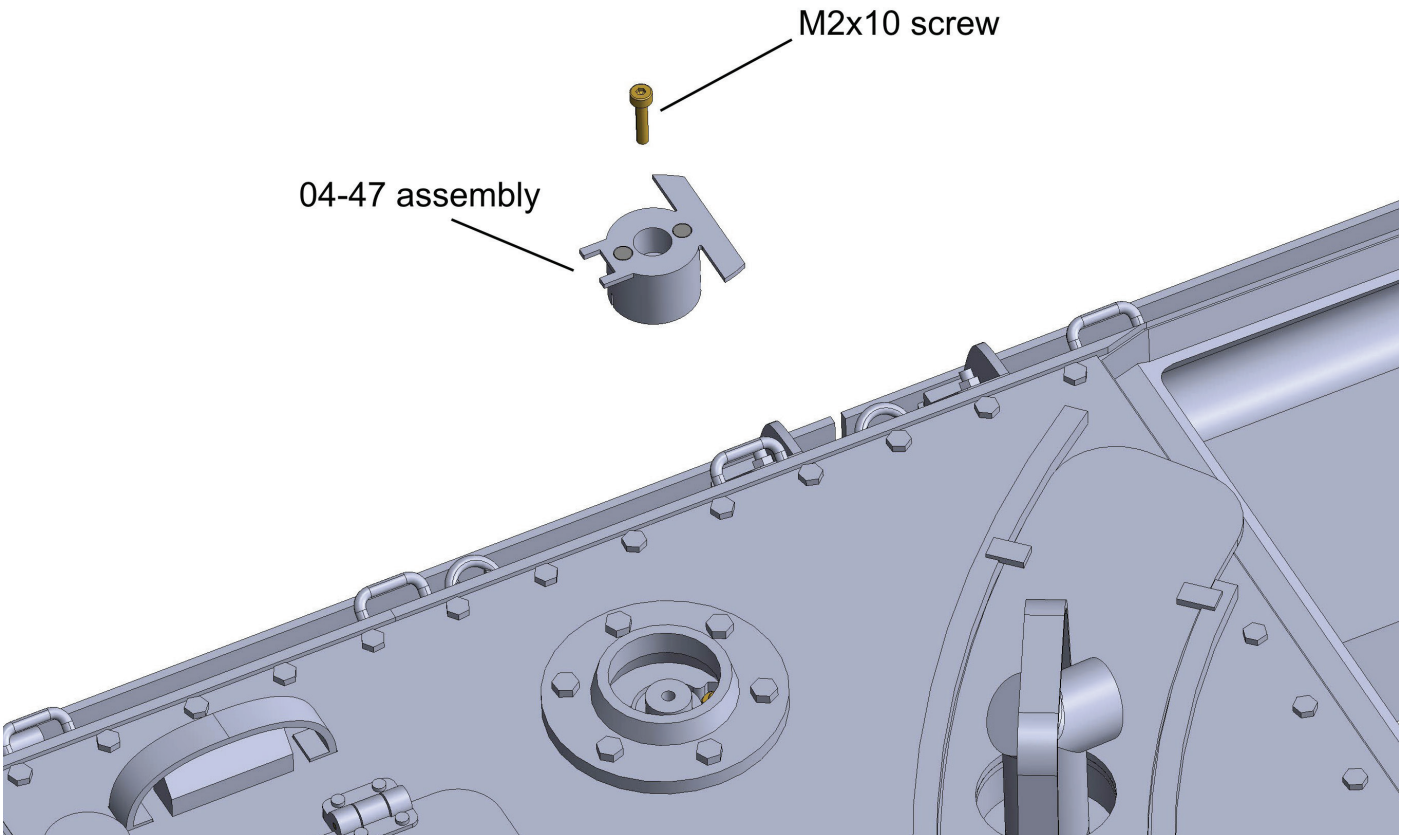

In the figure above you can see part SERVO_alt in the right position.
Install the subassembly 04-47.Secure with the M2x10 screw.
You can install 360° servo motor anytime in the future, if you want.
Continue to work on page 151.

Jagdpanzer 38(t)
Assembly guide

Cover installation

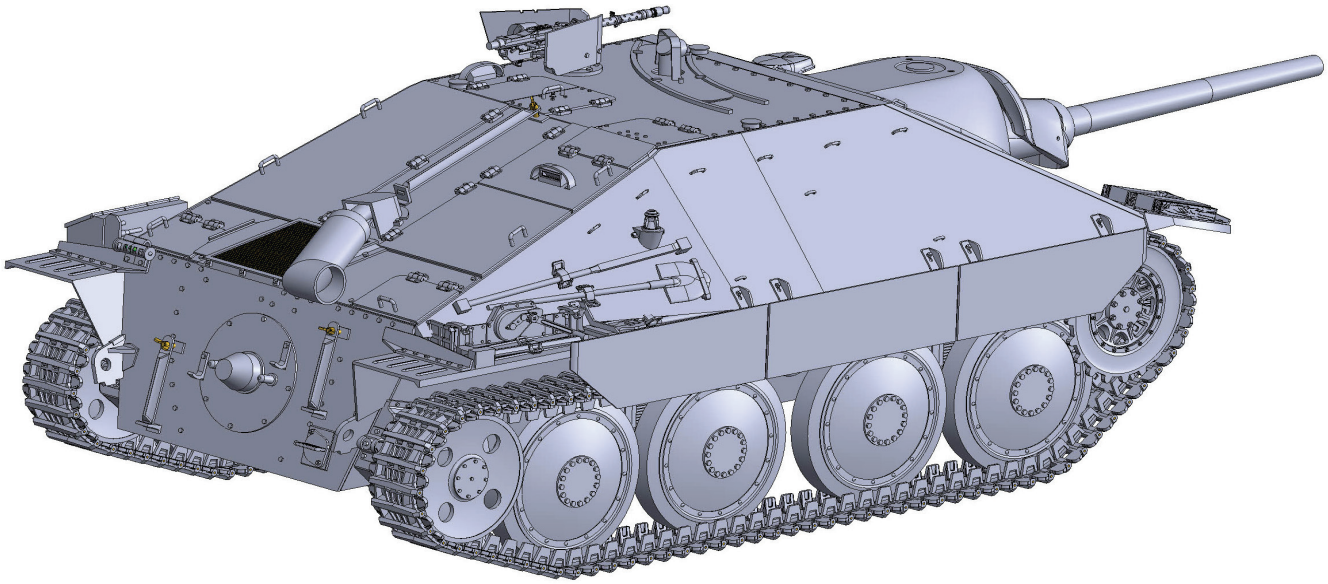

AMOUNT:	1
PRINTED PARTS:	
OPTIONAL PRINTED PARTS:	

Cover installation

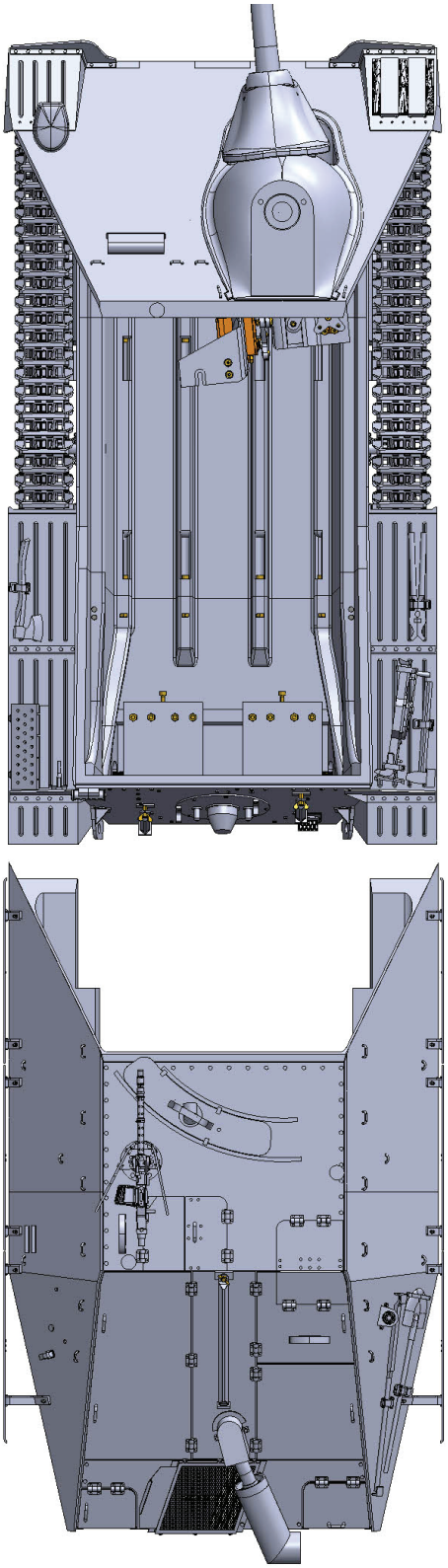

In case you installed a functional gunner's sight, make sure the gun is in the correct position when installing the cover. **The gun must be turned all the way to the left so that the aiming screw of the aiming bolt fits into the gun groove.**

Cover installation

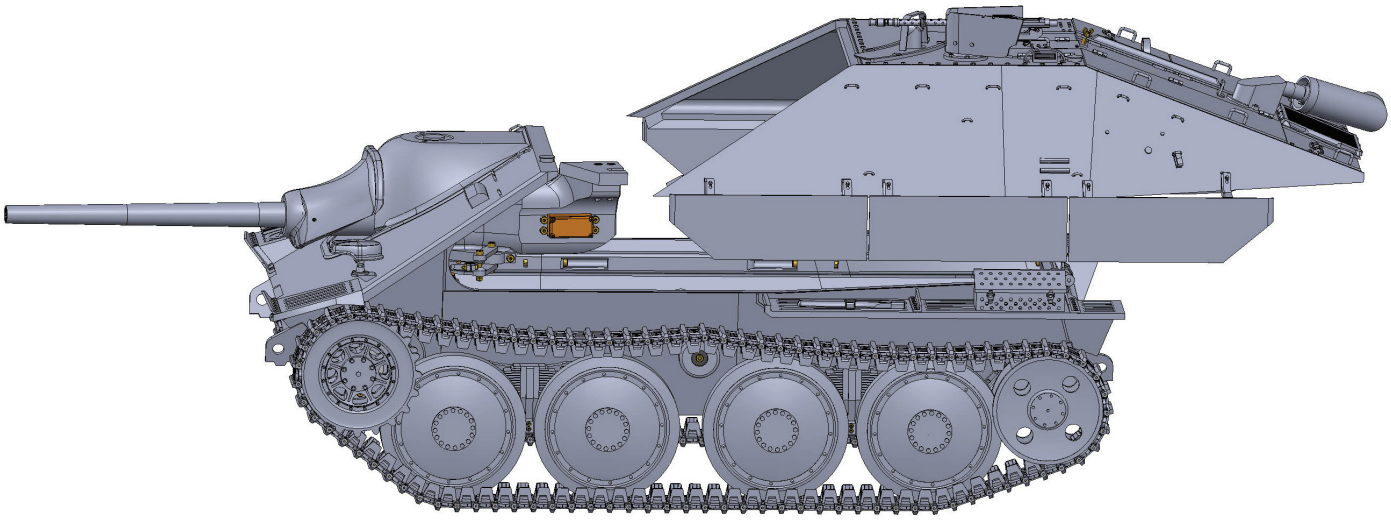

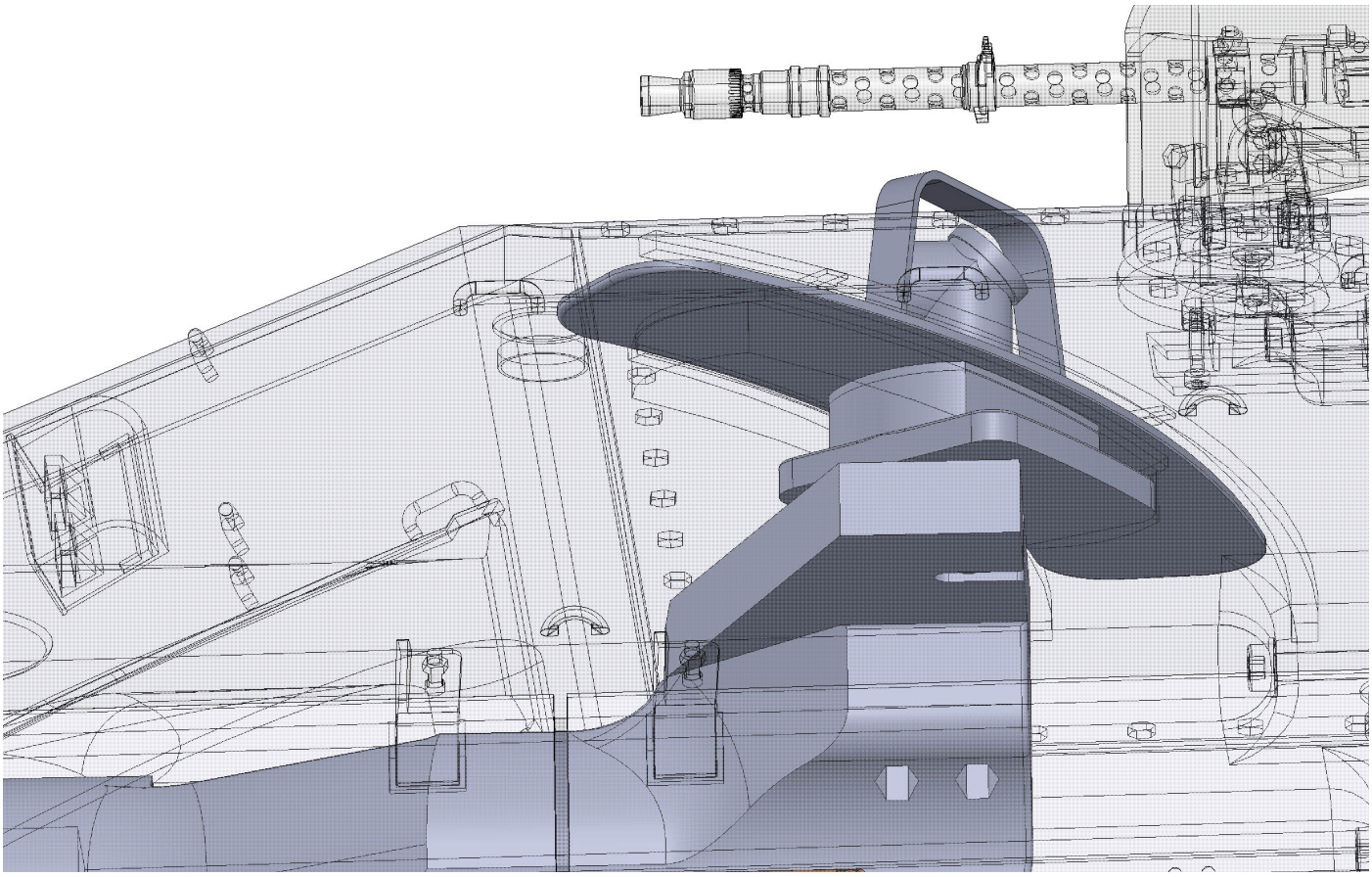

Place the cover carefully.

Cover installation

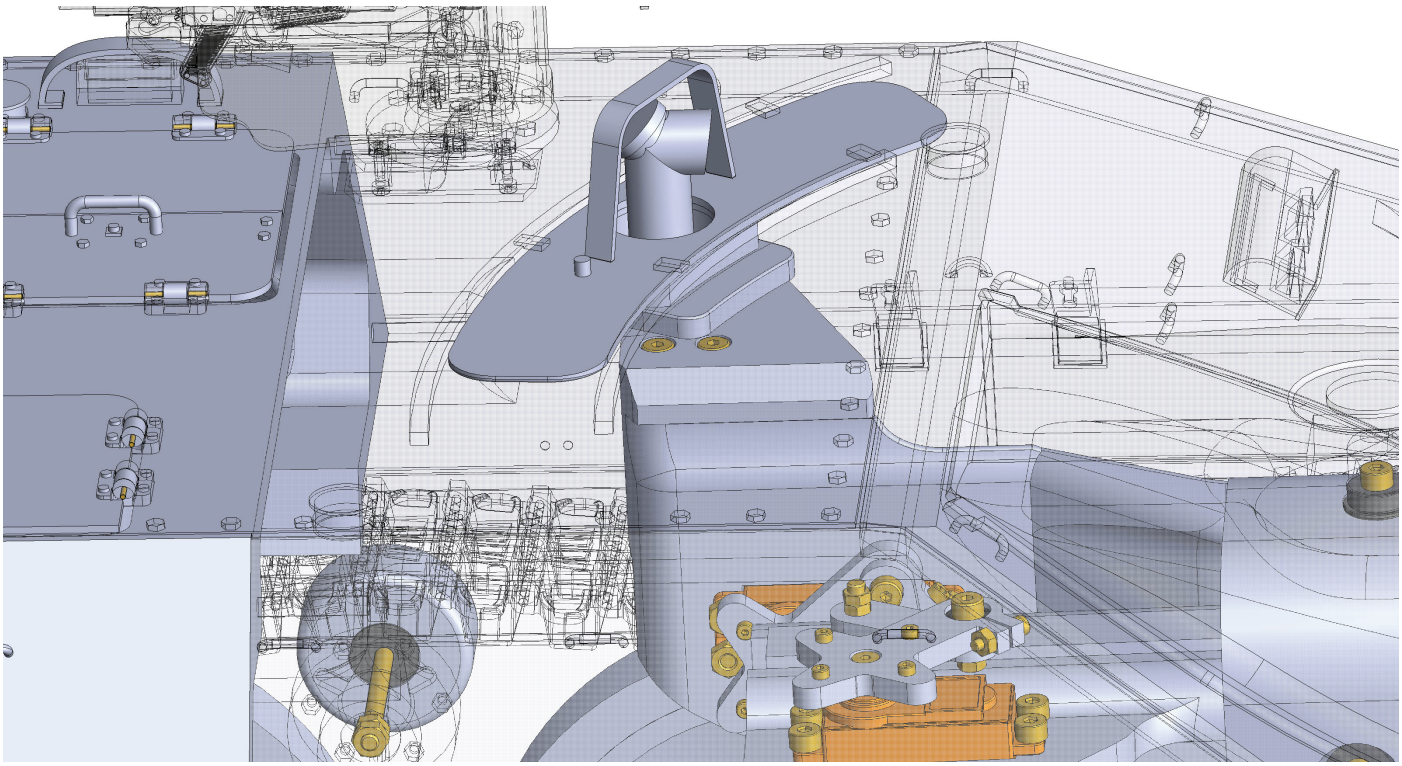

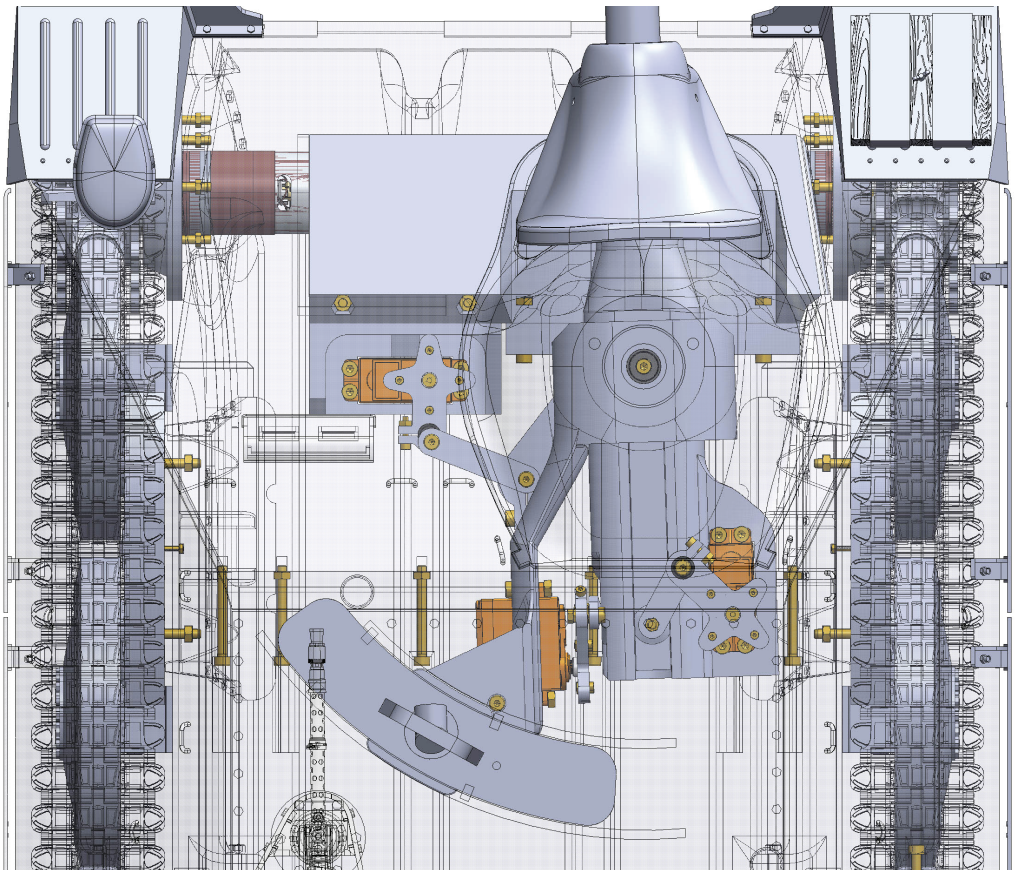

In the pictures, you can see the internal arrangement of the shooter sight.

Cover installation

Congratulations on completing your model.

We hope the construction was fun and trouble-free.
Electronics tips, more information and printing tips, common operating tips, and many more can be found in our forum at: https://www.warprints.xyz/forum

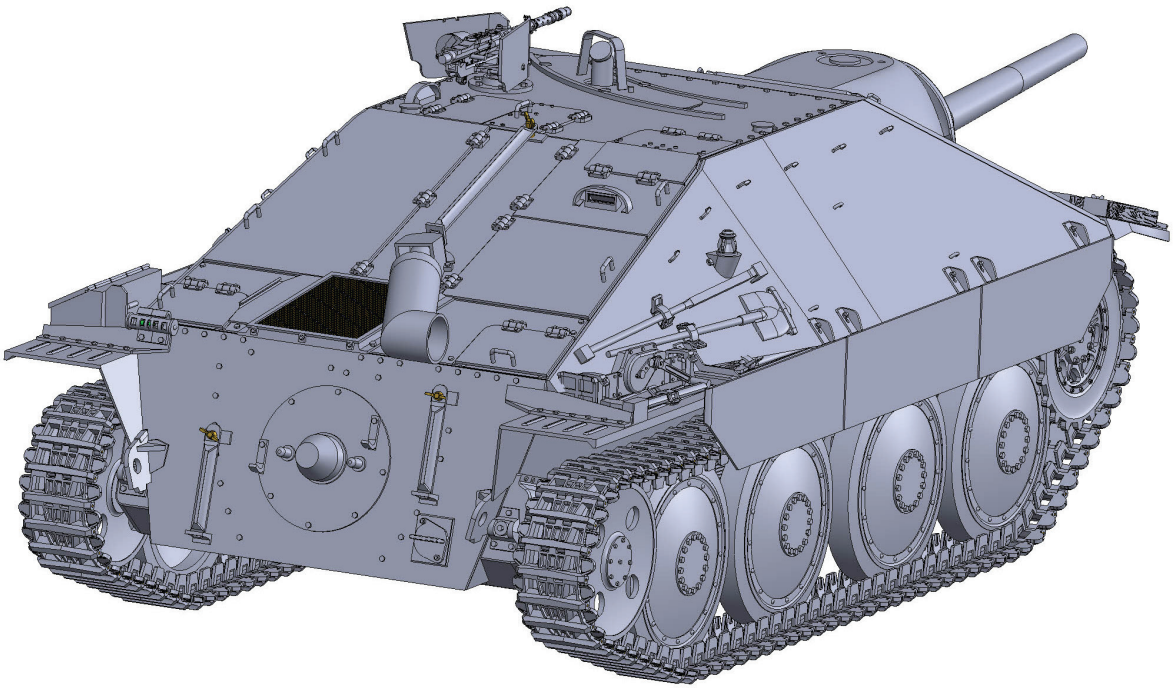

Jagdpanzer 38(t) - scale 1/6
Assembly Guide, version 1.1.3_EN
© warprints s.r.o. 2021